ICAO

International Standards
and Recommended Practices

Annex 10 to the Convention on International Civil Aviation

Aeronautical Telecommunications

Volume I
Radio Navigation Aids

Eighth Edition, July 2023

This edition supersedes, on 2 November 2023, all previous editions of Annex 10, Volume I.

For information regarding the applicability of the Standards and Recommended Practices, see the Foreword.

INTERNATIONAL CIVIL AVIATION ORGANIZATION

ICAO

International Standards
and Recommended Practices

Annex 10 to the Convention on International Civil Aviation

Aeronautical Telecommunications

Volume I
Radio Navigation Aids

Eighth Edition, July 2023

This edition supersedes, on 2 November 2023, all previous editions of Annex 10, Volume I.

For information regarding the applicability of the Standards and Recommended Practices, see the Foreword.

INTERNATIONAL CIVIL AVIATION ORGANIZATION

Published in separate English, French, Russian and Spanish editions by the
INTERNATIONAL CIVIL AVIATION ORGANIZATION
999 Robert-Bourassa Boulevard, Montréal, Quebec, Canada H3C 5H7

For ordering information and for a complete listing of sales agents
and booksellers, please go to the ICAO website at www.icao.int

First edition, 1949
Sixth edition, 2006
Seventh edition, 2018
Eighth edition, 2023

Annex 10— *Aeronautical Telecommunications*
Volume I — *Radio Navigation Aids*
Order Number: AN 10-1
ISBN 978-92-9275-173-9 (print version)
ISBN 978-92-9275-778-6 (electronic version)

© ICAO 2023

All rights reserved. No part of this publication may be reproduced, stored in a retrieval system or transmitted in any form or by any means, without prior permission in writing from the International Civil Aviation Organization.

AMENDMENTS

Amendments are announced in the supplements to the *Products and Services Catalogue;* the Catalogue and its supplements are available on the ICAO website at www.icao.int. The space below is provided to keep a record of such amendments.

RECORD OF AMENDMENTS AND CORRIGENDA

AMENDMENTS			
No.	Date applicable	Date entered	Entered by
1-93	Incorporated in this edition		
94	27/11/25	-	ICAO

CORRIGENDA			
No.	Date of issue	Date entered	Entered by

CONTENTS

Page

Foreword ..... *(ix)*

CHAPTER 1. Definitions 1-1

CHAPTER 2. General provisions for radio navigation aids 2-1

2.1 Standard radio navigation aids 2-1
2.2 Ground and flight testing 2-2
2.3 Provision of information on the operational status of radio navigation services 2-3
2.4 Power supply for radio navigation aids and communication systems 2-3
2.5 Human Factors considerations 2-3

CHAPTER 3. Specifications for radio navigation aids 3-1

3.1 Specification for ILS 3-1
3.2 Specification for precision approach radar system 3-26
3.3 Specification for VHF omnidirectional radio range (VOR) 3-28
3.4 Specification for non-directional radio beacon (NDB) 3-33
3.5 Specification for UHF distance measuring equipment (DME) 3-37
3.6 Specification for en-route VHF marker beacons (75 MHz) 3-58
3.7 Requirements for the Global Navigation Satellite System (GNSS) 3-59
3.8 [Reserved] 3-92
3.9 System characteristics of airborne ADF receiving systems 3-92
3.10 [Reserved] 3-92
3.11 Microwave landing system (MLS) characteristics 3-92

APPENDIX A. Microwave landing system (MLS) characteristics ..... APP A-1

APPENDIX B. Technical specifications for the Global Navigation Satellite System (GNSS) ..... APP B-1

1. Definitions ..... APP B-1
2. General ..... APP B-1
3. GNSS elements ..... APP B-1

Figures for Appendix B ..... APP B-277

Page

ATTACHMENTS

ATTACHMENT A. Determination of integrity and continuity of service objectives using the risk tree method ..... ATT A-1

ATTACHMENT B. Strategy for introduction and application of non-visual aids to approach and landing ..... ATT B-1

1. Introduction ..... ATT B-1
2. Objectives of strategy ..... ATT B-1
3. Considerations ..... ATT B-1
4. Strategy ..... ATT B-3

ATTACHMENT C. Information and material for guidance in the application of the Standards and Recommended Practices for ILS, VOR, PAR, 75 MHz marker beacons (en-route), NDB and DME ..... ATT C-1

1. Introduction ..... ATT C-1
2. Material concerning ILS installations ..... ATT C-2
3. Material concerning VOR/DVOR ..... ATT C-39
4. Precision approach radar system ..... ATT C-51
5. Specification for 75 MHz marker beacons (en-route) ..... ATT C-53
6. Material concerning NDB ..... ATT C-54
7. Material concerning DME ..... ATT C-64
8. Material concerning power supply switch-over times ..... ATT C-79

ATTACHMENT D. Information and material for guidance in the application of the GNSS Standards and Recommended Practices ..... ATT D-1

1. Definitions ..... ATT D-1
2. General ..... ATT D-1
3. Navigation system performance requirements ..... ATT D-1
4. GNSS core elements ..... ATT D-10
5. Aircraft-based augmentation system (ABAS) ..... ATT D-20
6. Satellite-based augmentation system (SBAS) ..... ATT D-24
7. Ground-based augmentation system (GBAS) and ground-based regional augmentation systems (GRAS) ..... ATT D-40
8. Signal quality monitor (SQM) design ..... ATT D-98
9. Status monitoring and NOTAM ..... ATT D-104
10. Interference ..... ATT D-108
11. Recording of GNSS parameters ..... ATT D-109
12. GNSS performance assessment ..... ATT D-110
13. GNSS and database ..... ATT D-110
14. Modelling of residual errors ..... ATT D-110

Figures for Attachment D ..... ATT D-112

ATTACHMENT E. Guidance material on the pre-flight checking of VOR airborne equipment ..... ATT E-1

1. Specification for a VOR airborne equipment test facility (VOT) ..... ATT E-1
2. Selection and use of VOR aerodrome check-points ..... ATT E-3

Page

ATTACHMENT F. Guidance material concerning reliability and availability of radiocommunications and navigation aids ..... ATT F-1

1. Introduction and fundamental concepts ..... ATT F-1
2. Practical aspects of reliability and availability ..... ATT F-4

ATTACHMENT G. Information and material for guidance in the application of the MLS Standards and Recommended Practices ..... ATT G-1

1. Definitions ..... ATT G-1
2. Signal-in-space characteristics — angle and data functions ..... ATT G-1
3. Ground equipment ..... ATT G-12
4. Siting considerations ..... ATT G-14
5. Operational considerations on siting of DME ground equipment ..... ATT G-23
6. Interrelationship of ground equipment monitor and control actions ..... ATT G-23
7. Airborne equipment ..... ATT G-24
8. Operations at the limits of and outside the promulgated MLS coverage sectors ..... ATT G-29
9. Separation criteria in terms of signal ratios and propagation losses ..... ATT G-30
10. Material concerning MLS installations at special locations ..... ATT G-31
11. Integrity and continuity of service — MLS ground equipment ..... ATT G-32
12. Classification of MLS approach azimuth, elevation and DME ground facilities ..... ATT G-36
13. Computed centre line approaches ..... ATT G-38
14. Application of Table G-15 service level objectives for MLS/RNAV operations ..... ATT G-44
15. Application of simplified MLS configurations ..... ATT G-45

Tables for Attachment G ..... ATT G-46
Figures for Attachment G ..... ATT G-63

ATTACHMENT H. Strategy for rationalization of conventional radio navigation aids and evolution toward supporting performance-based navigation ..... ATT H-1

1. Introduction ..... ATT H-1
2. Objectives of the strategy ATT-H-1
3. Considerations ..... ATT H-2
4. Strategy ATT-H-5

FOREWORD

Historical background

Standards and Recommended Practices for Aeronautical Telecommunications were first adopted by the Council on 30 May 1949 pursuant to the provisions of Article 37 of the Convention on International Civil Aviation (Chicago 1944) and designated as Annex 10 to the Convention. They became effective on 1 March 1950. The Standards and Recommended Practices were based on recommendations of the Communications Division at its Third Session in January 1949.

Up to and including the Seventh Edition, Annex 10 was published in one volume containing four parts together with associated attachments: Part I — Equipment and Systems, Part II — Radio Frequencies, Part III — Procedures, and Part IV — Codes and Abbreviations.

By Amendment 42, Part IV was deleted from the Annex; the codes and abbreviations contained in that part were transferred to a new document, Doc 8400.

As a result of the adoption of Amendment 44 on 31 May 1965, the Seventh Edition of Annex 10 was replaced by two volumes: Volume I (First Edition) containing Part I — Equipment and Systems, and Part II — Radio Frequencies, and Volume II (First Edition) containing Communication Procedures.

As a result of the adoption of Amendment 70 on 20 March 1995, Annex 10 was restructured to include five volumes: Volume I — Radio Navigation Aids; Volume II — Communication Procedures; Volume III — Communication Systems; Volume IV — Surveillance Radar and Collision Avoidance Systems; and Volume V — Aeronautical Radio Frequency Spectrum Utilization. By Amendment 70, Volumes III and IV were published in 1995 and Volume V was published in 1996 with Amendment 71.

Table A shows the origin of Annex 10, and the origin of subsequent amendments, together with a summary of the principal subjects involved and the dates on which the Annex and the amendments were adopted by Council, when they became effective and when they became applicable.

Action by Contracting States

Notification of differences. The attention of Contracting States is drawn to the obligation imposed by Article 38 of the Convention by which Contracting States are required to notify the Organization of any differences between their national regulations and practices and the International Standards contained in this Annex and any amendments thereto. Contracting States are invited to extend such notification to any differences from the Recommended Practices contained in this Annex and any amendments thereto, when the notification of such differences is important for the safety of air navigation. Further, Contracting States are invited to keep the Organization currently informed of any differences which may subsequently occur, or of the withdrawal of any differences previously notified. A specific request for notification of differences will be sent to Contracting States immediately after the adoption of each amendment to this Annex.

The attention of States is also drawn to the provisions of Annex 15 related to the publication of differences between their national regulations and practices and the related ICAO Standards and Recommended Practices through the Aeronautical Information Service, in addition to the obligation of States under Article 38 of the Convention.

Promulgation of information. The establishment and withdrawal of and changes to facilities, services and procedures affecting aircraft operations provided in accordance with the Standards, Recommended Practices and Procedures specified in Annex 10, should be notified and take effect in accordance with the provisions of Annex 15.

Use of the text of the Annex in national regulations. The Council, on 13 April 1948, adopted a resolution inviting the attention of Contracting States to the desirability of using in their own national regulations, as far as practicable, the precise language of those ICAO Standards that are of a regulatory character and also of indicating departures from the Standards, including any additional national regulations that were important for the safety or regularity of air navigation. Wherever possible, the provisions of this Annex have been deliberately written in such a way as would facilitate incorporation, without major textual changes, into national legislation.

Status of Annex components

An Annex is made up of the following component parts, not all of which, however, are necessarily found in every Annex; they have the status indicated:

1.— *Material comprising the Annex proper*:

a) *Standards* and *Recommended Practices* adopted by the Council under the provisions of the Convention. They are defined as follows:

Standard: Any specification for physical characteristics, configuration, matériel, performance, personnel or procedure, the uniform application of which is recognized as necessary for the safety or regularity of international air navigation and to which Contracting States will conform in accordance with the Convention; in the event of impossibility of compliance, notification to the Council is compulsory under Article 38.

Recommended Practice: Any specification for physical characteristics, configuration, matériel, performance, personnel or procedure, the uniform application of which is recognized as desirable in the interest of safety, regularity or efficiency of international air navigation, and to which Contracting States will endeavour to conform in accordance with the Convention.

b) *Appendices* comprising material grouped separately for convenience but forming part of the Standards and Recommended Practices adopted by the Council.

c) *Definitions* of terms used in the Standards and Recommended Practices which are not self-explanatory in that they do not have accepted dictionary meanings. A definition does not have independent status but is an essential part of each Standard and Recommended Practice in which the term is used, since a change in the meaning of the term would affect the specification.

d) *Tables* and *Figures* which add to or illustrate a Standard or Recommended Practice and which are referred to therein, form part of the associated Standard or Recommended Practice and have the same status.

2.— *Material approved by the Council for publication in association with the Standards and Recommended Practices*:

a) *Forewords* comprising historical and explanatory material based on the action of the Council and including an explanation of the obligations of States with regard to the application of the Standards and Recommended Practices ensuing from the Convention and the Resolution of Adoption;

b) *Introductions* comprising explanatory material introduced at the beginning of parts, chapters or sections of the Annex to assist in the understanding of the application of the text;

c) *Notes* included in the text, where appropriate, to give factual information or references bearing on the Standards or Recommended Practices in question, but not constituting part of the Standards or Recommended Practices;

d) *Attachments* comprising material supplementary to the Standards and Recommended Practices, or included as a guide to their application.

Disclaimer regarding patents

Attention is drawn to the possibility that certain elements of Standards and Recommended Practices in this Annex may be the subject of patents or other intellectual property rights. ICAO shall not be responsible or liable for not identifying any or all such rights. ICAO takes no position regarding the existence, validity, scope or applicability of any claimed patents or other intellectual property rights, and accepts no responsibility or liability therefore or relating thereto.

Selection of language

This Annex has been adopted in four languages — English, French, Russian and Spanish. Each Contracting State is requested to select one of those texts for the purpose of national implementation and for other effects provided for in the Convention, either through direct use or through translation into its own national language, and to notify the Organization accordingly.

Editorial practices

The following practice has been adhered to in order to indicate at a glance the status of each statement: *Standards* have been printed in light face roman; *Recommended Practices* have been printed in light face italics, the status being indicated by the prefix **Recommendation**; *Notes* have been printed in light face italics, the status being indicated by the prefix *Note*.

The following editorial practice has been followed in the writing of specifications: for Standards the operative verb “shall” is used, and for Recommended Practices the operative verb “should” is used.

The units of measurement used in this document are in accordance with the International System of Units (SI) as specified in Annex 5 to the Convention on International Civil Aviation. Where Annex 5 permits the use of non-SI alternative units these are shown in parentheses following the basic units. Where two sets of units are quoted it must not be assumed that the pairs of values are equal and interchangeable. It may, however, be inferred that an equivalent level of safety is achieved when either set of units is used exclusively.

Any reference to a portion of this document, which is identified by a number and/or title, includes all subdivisions of that portion.

Table A. Amendments to Annex 10, Volume I

Amendment	*Source(s)*	*Subject(s)*	*Adopted* *Effective* *Applicable*
1st Edition	Third Session of the COM Division	Introduction of Standards and Recommended Practices for radio navigation aids and communication facilities, together with methods of operation, procedures and codes for worldwide application.	30 May 1949 1 March 1950 1 April 1950
1	Third Session of the COM Division	Amendment to provisions for radio teletypewriter terminal equipment in the band 3-30 MHz.	28 March 1951 1 October 1951 1 January 1952
2*	Third Session of the COM Division	Addition of guidance material concerning radio teletypewriter system engineering.	28 March 1951 1 October 1951 1 January 1952
3	Third Session of the COM Division	Standards and Recommended Practices relating to radio frequencies.	28 March 1951 1 October 1951 1 January 1952
4	Third Session of the COM Division	Standards and Recommended Practices relating to communications procedures.	28 March 1951 1 October 1951 1 April 1952
5	Third Session of the COM Division	Standards and Recommended Practices relating to codes and abbreviations.	28 March 1951 1 October 1951 1 April 1952
6	Third Session of the COM Division	Q Code.	1 April 1952 4 July 1952 1 September 1952
7	Air Navigation Commission	Introduction of definitions for height, altitude and elevation in Annex 10.	17 June 1952 1 December 1952 1 April 1953
8	Fourth Session of the COM Division	Amendments concerning definitions, VHF radiotelegraph for aural reception, DME, SRE, NDB, 75 MHz en-route marker beacons, ILS.	17 June 1952 1 December 1952 1 April 1953
9	Fourth Session of the COM Division	Provisions concerning the utilization of offset frequency simplex.	17 June 1952 1 December 1952 1 April 1953
10	Fourth Session of the COM Division	Definitions and procedures relating to the AFS, AMS and Broadcasts.	17 June 1952 1 December 1952 1 April 1953
11	Secretariat proposal	Editorial amendments consequential to Amendment 7, and editorial improvements to Part IV.	17 June 1952 1 December 1952 1 April 1953
12	Fourth Session of the COM Division	Annulment of 5.1.6.7 of Amendment 10 adopted by Council on 17 June 1952.	28 November 1952 1 March 1953 1 April 1953
13	Proposal by Ireland on Recommendations of the Fourth Session of the COM Division	Procedure governing the relay of traffic between an aeronautical station and an aircraft no longer in radio contact.	5 May 1953 15 August 1953 1 October 1953

Amendment	*Source(s)*	*Subject(s)*	*Adopted* *Effective* *Applicable*
14	First AN Conference	Specifications for the siting of ILS marker beacons, VHF equisignal localizers and associated monitors.	11 December 1953 1 May 1954 1 June 1954
15	Fifth Session of the COM Division	Amendment of paired frequencies for ILS localizers and glide paths.	2 November 1954 1 March 1955 1 April 1955
16	Fifth Session of the COM Division	Provision of additional assignable frequencies in the VHF bands by extending the allotment table and by making provision for decreasing, under certain conditions, the minimum separation between channels.	2 November 1954 1 March 1955 1 April 1955
17	Fifth Session of the COM Division	Addition of Standards and Recommended Practices on interim long distance radio navigation aids and on communications systems; also updating of the ILS specifications.	10 December 1954 1 April 1955 1 October 1955
18	Fifth Session of the COM Division	Establishment of basic rules for the selection of frequencies for radio navigation aids operating in frequency bands above 30 MHz, including frequencies for secondary radar.	10 December 1954 1 April 1955 1 October 1955
19	Fifth Session of the COM Division	Procedure to facilitate downgrading or cancellation of messages not delivered within time specified by originator and requirement for specification of aircraft heading in distress message.	10 December 1954 1 April 1955 1 October 1955
20	Fifth Session of the COM Division	Amendment of codes and abbreviations.	10 December 1954 1 April 1955 1 October 1955
21	Third North Atlantic RAN Meeting	Alignment of radiotelegraphy messages originating in aircraft with radiotelephony messages.	27 May 1955 1 September 1955 1 October 1955
22	Fifth Session of the COM Division	Pairing of localizer and glide path frequencies for the ILS.	18 November 1955 1 April 1956 1 December 1956
23	Air Navigation Commission	Amendment concerning words to be used in spelling in radiotelephony.	18 November 1955 1 March 1956 1 March 1956
24	Fourth Session of the MET Division	Amendment of Q code signal QBB.	18 November 1955 1 April 1956 1 December 1956
25*	Annex 3	Amendment of the Q code signal QUK (consequential to amendment of Annex 3).	8 November 1955 — 1 January 1956
26	Annex 15	New definition of NOTAM and references to NOTAM (consequential to amendment of Annex 15).	22 February 1956 1 July 1956 1 December 1956
27	Second AN Conference	Siting of the inner and middle markers of the ILS and guidance material on the location of the ILS reference point.	11 May 1956 15 September 1956 1 December 1956

Amendment	*Source(s)*	*Subject(s)*	*Adopted* *Effective* *Applicable*
28	Procedures of the World Meteorological Organization (WMO) and Annex 3	Amendment of the Q code signals for the reporting of clouds and the introduction of the AIREP reporting procedure.	15 May 1956 15 September 1956 1 December 1956
29	Proposal by Australia	Tape-relay Standards.	4 June 1957 1 October 1957 1 December 1957
30*	Annex 3	Amendment of the Q code signals QUK and QUL (consequential to amendment of Annex 3).	25 November 1957 — 1 December 1957
31	Proposal by France	Amendment of the Q code signals QNH and QNY.	21 March 1958 1 August 1958 1 December 1958
32	Sixth Session of the COM Division	Recommendations of the meeting.	9 June 1958 1 October 1958 1 December 1958
33	ICAO Panel of Teletypewriter Specialists	Communication operational procedures to ensure compatibility between AFTN communication centres employing manual "torn-tape", semi-automatic and fully automatic operation.	15 December 1958 1 May 1959 1 October 1959
34	RAC/SAR Division	Increased number of radio frequencies that may be selected for use in radio survival equipment.	8 December 1959 1 May 1960 1 August 1960
35	Special COM/OPS/RAC/SAR Division	Implementation requirements for VOR, introduction of new DME specification and extension of protection dates for VOR and DME to 1 January 1975.	8 April 1960 1 August 1960 1 January 1961
36	Air Navigation Commission	Substituted "Radiotelephony Speech for International Aviation" for "International Language for Aviation".	8 April 1960 1 August 1960 1 January 1961
37	Fifth Session of the MET Division, AIS and Aeronautical Charts Division	Procedures respecting the forwarding of messages; amendment of Q code signals.	2 December 1960 1 April 1961 1 July 1961
38	Ordinary Administrative Radio Conference (OARC-1959)	Alignment of the provisions in Annex 10 with the related provisions of the Radio Regulations of the International Telecommunication Union (ITU).	20 January 1961 1 June 1961 1 July 1961
39	ICAO Panel of Teletypewriter Specialists	Simplification of communication procedures for diversion routing, clarification of the application of ICAO two-letter abbreviations used in the addresses of messages and communication procedures concerning interstation cooperation.	26 June 1961 1 December 1961 1 January 1962
40	Seventh Session of the COM Division	General updating and amendment of equipment and systems; radio frequencies and procedures.	5 April 1963 1 August 1963 1 November 1963
41	PANS-MET	Amendment of the Q code signals QFE, QFF and QNH to permit the transmission of altimeter settings in units of millibars or tenths of a millibar.	4 June 1963 1 October 1963 1 January 1964

Amendment	*Source(s)*	*Subject(s)*	*Adopted* *Effective* *Applicable*
42	Fourth Meeting of the MOTNE Development/Implementation Panel; Seventh Session of the COM Division; proposals by the Federal Republic of Germany, the United Kingdom and the United States	Non-typing or switching signals on the AFTN; new guidance material on ILS course structures and their evaluation; guidance material on ILS course structure and on the more important communication terms of specialized meaning and their definitions; the deletion of Part IV of the Annex as a consequence of the establishment of a new abbreviations and codes document; departure messages and guidance material on the monitoring of SSR.	25 March 1964 1 August 1964 1 January 1965
43	Seventh Session of the COM Division	Amendments concerning the performance of ILS facilities, Category I and Category II.	23 June 1964 1 November 1964 1 February 1965
44	Seventh Session of the COM Division; Fifth Meeting of the ICAO Panel of Teletypewriter Specialists; RAC/SAR and OPS Division; PANS — Radiotelephony Procedures	Breakdown of Annex 10 into two volumes, Volume I (First Edition) containing Part I — Equipment and Systems, and Part II — Radio Frequencies, and Volume II (First Edition) containing Communications Procedures. Changes in the provisions regarding the action to be taken in the case of communications failure and in the case of transfer of communications watch from one radio frequency to another; provisions relating to teletypewriter procedures; deletion of the radiotelephony procedures in the aeronautical mobile service, except for certain basic provisions of the distress procedures.	31 May 1965 1 October 1965 10 March 1966
45	Fourth AN Conference; Sixth Meeting of the Panel of Teletypewriter Specialists	Specification of the technical characteristics for VHF survival radio equipment and introduction of the concept of the “ILS reference datum” in lieu of the “ILS reference point”; a number of AFTN technical provisions related to the progressive automation of the AFTN.	12 December 1966 12 April 1967 24 August 1967
46	Fifth Meeting of the ATC Automation Panel	Definitions and technical provisions relating to ATS message transmission on direct or omnibus channels.	7 June 1967 5 October 1967 8 February 1968
47	COM/OPS Divisional Meeting	Updating or expansion of practically every major specification. Of special importance are the changes to the ILS and SSR specifications; the introduction of a system specification for Loran-A; the expanded guidance material on the deployment of VHF communications frequencies and specification, for the first time, of the airborne elements of ADF, VHF and HF SSB Communications Systems.	11 December 1967 11 April 1968 22 August 1968
48	COM/OPS Divisional Meeting; Fifth AN Conference	New method of prescribing VOR/DME coverage; provisions regarding the availability of information on the operational status of radio navigation aids, regarding secondary power supplies of radio navigation and communication systems as well as guidance on power supply switch-over times for radio aids used in the vicinity of aerodromes.	23 January 1969 23 May 1969 18 September 1969
49	First Meeting of the Automated Data Interchange Systems Panel; Sixth AN Conference	Introduction of a 7-unit code for data interchange at medium signalling rates, the medium signalling rates to be used and the types of transmission and modulation for each of them; provisions concerning the secondary surveillance radar ground equipment to ensure immediate recognition of Codes 7600 and 7700 and provisions concerning the use of Code 2000 on Mode A.	1 June 1970 1 October 1970 4 February 1971

Amendment	*Source(s)*	*Subject(s)*	*Adopted* *Effective* *Applicable*
50	Second Meeting of the Automated Data Interchange Systems Panel; ANC study on RAN Meeting recommendations of worldwide applicability; Fourth Meeting of the All Weather Operations Panel	Introduction of the term "Hertz (Hz)" in place of the term "cycles per second (c/s)" as the unit of frequency for electric and radio-technical matters; definition for data signalling rate, the extension of signalling rates to 9 600 bits/second and some explanatory provisions related to the 7-unit coded character set; provisions concerning the pre-flight checking of VOR airborne equipment; definitions for "ILS Point D" and "ILS Point E" and some changes in the provisions relating to the specification for ILS and en-route VHF marker beacons.	24 March 1972 24 July 1972 7 December 1972
51	Third Meeting of the Automated Data Interchange Systems Panel; Third Meeting of the Obstacle Clearance Panel	Technical provisions relating to international ground-ground data interchange; guidance material concerning the lateral placement of the glide path antenna in relation to Annex 14 provisions on obstacle limitation surfaces and objects on strips for runways.	11 December 1972 11 April 1973 16 August 1973
52	Seventh AN Conference	New Standard relating to an emergency locator beacon — aircraft (ELBA); provision for additional localizer and glide path frequency pairs, and the introduction of 25 kHz channel spacing in the VHF band of the International Aeronautical Mobile Service; introduces refinements to the specifications for ILS, SSR and VOR, and extends the protection dates for ILS, DME and VOR from 1975 to 1985.	31 May 1973 1 October 1973 23 May 1974
53	Assembly Resolutions A17-10 and A18-10	Provisions relating to practices to be followed in the event that an aircraft is being subjected to unlawful interference.	7 December 1973 7 April 1974 23 May 1974
54*	Fourth Meeting of the Automated Data Interchange Systems Panel	New Attachment G to Part I of Volume I containing guidance material for ground-ground data interchange over data links at medium and higher signalling rates, and the insertion of cross references in Volume I, Part I, Chapter 4, 4.12.	17 June 1974 — —
55	Fifth Meeting of the All Weather Operations Panel; Second Meeting of the Review of the General Concept of Separation Panel; AN Working Group on Regional Plans; Seventh AN Conference	Technical specifications and guidance material for localizer and glide path components of the ILS; guidance material in respect of mandatory change-over points for VOR-defined ATS routes; alignment of the implementation provisions for ILS with those of other radio navigation aids; required geographic separation between ILS facilities and provisions concerning use of the VHF emergency channel (121.5 MHz) in the event of interception of aircraft.	4 February 1975 4 June 1975 9 October 1975
56	Correspondence	Designation of SSR Code 7500 for use in the event of unlawful interference.	12 December 1975 12 April 1976 12 August 1976
57	ASIA/PAC RAN Meeting	Provision of, and maintenance of guard on the VHF frequency 121.5 MHz.	16 June 1976 16 October 1976 6 October 1977
58	ANC study of threshold wheel clearance; Sixth Meeting of the Automated Data Interchange Systems Panel; proposal by France; proposal by IFALPA	Introduction of tables of code conversion between the International Telegraph Alphabet No. 2 and the 7-unit coded character set; modification of the frame check sequence algorithm used for error checking in automated data interchange; amendment of material related to the ILS reference datum, introduction of new material related to the possibility of interference from spurious radiations in the LF/MF band and amendment to the guidance material in Attachments C and G to Part I.	23 & 27 June 1977 27 October 1977 23 February 1978

Amendment	*Source(s)*	*Subject(s)*	*Adopted* *Effective* *Applicable*
59*	Ninth AN Conference; ANC study of frangibility requirements emanating from Rec. 3/5 of the Third Meeting of the Obstacle Clearance Panel; COM Divisional Meeting (1976)	Transfer of the SSR Mode B to an unassigned status; cross-reference to the provisions of Annex 14 concerning frangibility criteria for the navigational facilities on operational areas; cross-reference to the provisions of Annex 11 concerning the determination of VOR accuracy and change-over point; introduction of Attachment C to Part II, dealing with Guiding Principles for Long Distance Operational Control Communications.	14 December 1977 14 April 1978 10 August 1978
60	Sixth Meeting of the All Weather Operations Panel	Change of a preferred ILS glide path angle from 2.5 degrees to 3 degrees.	4 December 1978 4 April 1979 29 November 1979
61	Seventh Meeting of the Automated Data Interchange Systems Panel; AWO Divisional Meeting (1978); COM Divisional Meeting (1978)	Introduction of a new series of marginal serial numbers in use by the International Telecommunication Union (ITU) and clarification of the term “Radio Regulations”; change to the definition of the Aeronautical Fixed Telecommunication Network (AFTN); change of the ILS protection date to 1995; addition of information related to the Microwave Landing System (MLS); changes in the radio frequency provisions related to the Final Acts of the ITU World Administrative Radio Conference (WARC) 1978; changes in the provisions related to the introduction of single sideband classes of emission into the high frequency (HF) aeronautical mobile service; clarification of symbols permitted with the 7-unit coded character set; change from single numbered to double numbered code and byte independent data link control procedures; introduction of new material related to character oriented data link control procedures; changes to the definition of operational control communications.	10 December 1979 10 April 1980 27 November 1980
62	Eighth Meeting of the Automated Data Interchange Systems Panel; Eighth Meeting of the All Weather Operations Panel; ANC study related to the interception of civil aircraft; Secretariat recommendation related to the protection date for VOR and DME	Changes to the protection date provisions of VOR and DME; changes and additions to the material related to ILS airborne equipment criteria and criteria on geographic separation of VOR/ILS facilities; addition of material related to the continuous check of channel condition and the use of controlled circuit protocols; changes to the provisions to make the 7-unit coded character set identical to the International Reference Version of International Alphabet No. 5; addition of provisions related to the use of character parity on CIDIN links; addition to the provisions related to character oriented data link control procedures; changes to the provisions related to VHF communication in the event of interception.	14 December 1981 14 April 1982 25 November 1982
63	ANC recommendations relating to the assignment of an air-to-air VHF frequency at the request of IFALPA; Secretariat recommendations related to depletion of the SELCAL codes; AIG Divisional Meeting (1979); COM Divisional Meeting (1981)	Changes and additions to the material related to frequencies above 30 MHz used for particular functions to provide for an air-to-air VHF communications channel; addition of material related to the addition of new RED SELCAL tones; changes and additions to the material related to radar characteristics to provide for the recording and retention of radar data; extensive changes and additions to Chapters 1, 2, 3, 4, 5, 6 and Appendix A with respect to ILS, NDB, DME, MLS, radio-teletype, VHF and HF communications, survival radio equipment and emergency locator beacons.	13 December 1982 13 April 1983 24 November 1983
64	—	No change.	—

Amendment	*Source(s)*	*Subject(s)*	*Adopted* *Effective* *Applicable*
65	ANC recommendations relating to the protection date of aeronautical mobile VHF communications equipment operating on 25 kHz channel spacing at the request of the Kingdom of the Netherlands; Secretariat recommendations related to harmful interference to aeronautical frequency bands from external sources, and related to switching and signalling over aeronautical voice circuits; ANC recommendations relating to SPI pulse in SSR Mode C at the request of the United Kingdom; Ninth Meeting of the All Weather Operations Panel; 10th Meeting of the Automated Data Interchange Systems Panel	Changes to the material related to the protection date of aeronautical mobile VHF communications equipment operating on 25 kHz channel spacing; changes and additions to the material relating to harmful interference to aeronautical frequency bands from external sources; addition of material relating to switching and signalling over aeronautical voice circuits; changes to material relating to SSR SPI pulse transmission; extensive changes to Chapters 3, 4 and Attachments C, G and H with respect to ILS, DME and CIDIN.	6 December 1984 6 April 1985 21 November 1985
66	Air Navigation Commission	SSR Code 2000; use and provision of 121.5 MHz.	14 March 1986 27 July 1986 20 November 1986
67	COM/OPS Divisional Meeting (1985); 10th and 11th Meetings of the All Weather Operations Panel; Second Meeting of the Secondary Surveillance Radar Improvements and Collision Avoidance Systems Panel; recommendations of the All Weather Operations Panel working group and the Secretariat relating to MLS basic data word parity equations	Refinements of technical specifications for the current secondary surveillance radar (SSR); introduction of technical specifications for SSR Mode S and material on allocation to States and assignment to aircraft of SSR Mode S addresses; extensive changes and additions to the material relating to MLS, DME and ILS; introduction of ILS and MLS protection dates and ICAO ILS/MLS transition plan.	16 March 1987 27 July 1987 22 October 1987
68	11th Meeting of the All Weather Operations Panel; ANC	Refinements of technical specifications for distance measuring equipment (DME); deletion of the requirement for microwave landing system (MLS) Morse Code identification; new provision concerning the installation of 121.5 MHz ground equipment.	29 March 1990 30 July 1990 15 November 1990
69	COM/MET Divisional Meeting (1982); COM/MET/OPS Divisional Meeting (1990); Fourth Meeting of the Secondary Surveillance Radar Improvements and Collision Avoidance Systems Panel; Fifth Meeting of the Operations Panel; 30th Meeting of the European Air Navigation Planning Group; ANC	Changes to AFTN message procedures and addition of material related to the world area forecast system (WAFS) telecommunications requirements; addition of material related to VHF air-ground data link communications and changes to material concerning VHF offset carrier systems; updating of material related to SSR Mode S and the 24-bit aircraft addressing scheme; changes to material related to the operational objectives for the ILS facility performance categories; changes to material related to DME/N total system accuracy; changes and additions to material related to emergency location transmitters (ELTs).	22 March 1993 26 July 1993 11 November 1993

Amendment	*Source(s)*	*Subject(s)*	*Adopted* *Effective* *Applicable*
70	ANC; Third Meeting of the Aeronautical Fixed Service Systems Planning for Data Interchange Panel; 34th Meeting of the European Air Navigation Planning Group	Restructuring of Annex 10 into five volumes; deletion of obsolete specifications and guidance material on manual Morse code procedures and teletypewriter systems; inclusion of material on common ICAO data interchange network (CIDIN).	20 March 1995 24 July 1995 9 November 1995
71	ANC; Special COM/OPS Divisional Meeting (1995); 12th, 13th and 14th Meetings of the All Weather Operations Panel; Secretariat proposals for deletion of obsolete material	Finalization of SARPs and guidance material for the microwave landing system (MLS), incorporation of a new strategy for introduction and application of non-visual aids to approach and landing in place of the ILS/MLS transition plan; relocation of material to Volumes III, IV and V, as appropriate; deletion of obsolete specifications for Consol and Loran-A systems and guidance material on the utilization of facilities, research, development and evaluation.	12 March 1996 15 July 1996 7 November 1996
72	—	No change.	—
73	Air Navigation Commission	Introduction of Human Factors-related material.	19 March 1998 20 July 1998 5 November 1998
74	Sixteenth Meeting of the All Weather Operations Panel; Air Navigation Commission	Introduction of: a) required navigation performance (RNP) for approach, landing and departure operation; b) updating of specifications for instrument landing system (ILS) and microwave landing system (MLS); and c) associated guidance material.	18 March 1999 19 July 1999 4 November 1999
75	—	No change.	—
76	Third meeting of the Global Navigation Satellite System Panel (GNSSP); proposal by the United Kingdom for continuity of service requirements for ILS and MLS	Global navigation satellite system (GNSS); continuity of service requirements for ILS localizers and MLS azimuth facilities used in support of Category IIIA operations; updating of references to the ITU Radio Regulations.	12 March 2001 16 July 2001 1 November 2001
77	Global Navigation Satellite System Panel (GNSSP)	Incorporation of GLONASS-related technical specifications in the satellite-based augmentation system (SBAS) and ground-based augmentation system (GBAS) sections of GNSS requirements; provision for use of GBAS positioning service in support of terminal area navigation (RNAV) operations; provision for use of new message Type 28 to enhance performance of SBAS; and incorporation of additional guidance material and clarifications/editorial corrections to SARPs and guidance material.	27 February 2002 15 July 2002 28 November 2002
78	—	No change.	—

Amendment	*Source(s)*	*Subject(s)*	*Adopted* *Effective* *Applicable*
79	Fourth meeting of the Global Navigation Satellite System Panel	Changes to GNSS SARPs and related guidance material concerning performance specifications for approach with vertical guidance (APV); global positioning system (GPS) selective availability (SA) discontinuation and clarification of signal power level; specifications for modernized GLObal NAvigation Satellite System (GLONASS-M); frequency planning criteria for ground-based augmentation system (GBAS) and a number of other enhancements.	23 February 2004 12 July 2004 25 November 2004
80	Eleventh Air Navigation Conference	Updates to the strategy for introduction and application of non-visual aids to approach and landing.	25 February 2005 11 July 2005 24 November 2005
81 (6th Edition)	Navigation Systems Panel (NSP)	a) Introduction of ground-based regional augmentation system (GRAS) Standards and Recommended Practices (SARPs); b) Amendments to SARPs for instrument landing system (ILS), distance measuring equipment (DME) and microwave landing system (MLS).	24 February 2006 17 July 2006 23 November 2006
82	Aeronautical Communications Panel (ACP)	Identification of the universal access transceiver (UAT) operating frequency.	26 February 2007 16 July 2007 22 November 2007
83	Secretariat with the assistance of the Required Navigation Performance and Special Operations Requirements Study Group (RNPSORSG); Navigation Systems Panel (NSP)	a) Amendments to definitions and Standards to align required navigation performance (RNP) and area navigation (RNAV) terminology with the performance-based navigation (PBN) concept; and b) Amendments to resolve certain navigation systems implementation issues and to reflect the evolution of existing global navigation satellite systems (GNSS) and equipment.	10 March 2008 20 July 2008 20 November 2008
84	Navigation Systems Panel (NSP)	a) update and reorganize the material on general provisions for radio navigation aids; b) amend obsolete or ambiguous provisions for the instrument landing system (ILS); c) amend obsolete or ambiguous provisions material for the very high frequency (VHF) omnidirectional radio range (VOR); d) delete material on testing of non-directional beacons (NDB), which duplicates existing guidance contained in Doc 8071, Manual on Testing of Radio Navigation Aids; e) reflect the results of the review of the distance monitoring equipment (DME) issues identified in Recommendations 6/14 and 6/15 of the Eleventh Air Navigation Conference; f) update the accuracy Standard in light of actual avionics performance, and clarify and simplify existing material; and g) address potential safety issues identified in the course of microwave landing system (MLS) Category III certification.	6 March 2009 20 July 2009 19 November 2009

Amendment	*Source(s)*	*Subject(s)*	*Adopted* *Effective* *Applicable*
85	Navigation Systems Panel (NSP)	a) improvement of the instrument landing system (ILS) localizer signal quality at aerodromes where building or terrain reflections cause interference of the reflected signal with the desired signal; b) extension of global navigation satellite system (GNSS) Category I approach operations; and c) evolution of the GLObal NAvigation Satellite System (GLONASS).	26 February 2010 12 July 2010 18 November 2010
86	Navigation Systems Panel (NSP)	Changes reflecting experience gained with initial implementation of the global navigation satellite system (GNSS) ground-based augmentation system (GBAS).	4 March 2011 18 July 2011 17 November 2011
87	Navigation Systems Panel (NSP)	a) changes to satellite-based augmentation system (SBAS) received signal power requirements; b) introduction of two new SBAS service provider identifiers; c) changes to the encoding of the runway number field in the final approach segment (FAS) data block; and d) changes to GNSS antenna gain requirements.	7 March 2012 16 July 2012 15 November 2012
88-A	—	No change.	—
88-B	Secretariat supported by the Approach Classification Task Force (ACTF) in coordination with the Aerodromes Panel (AP), the Instrument Flight Procedures Panel (IFPP), the Navigation Systems Panel (NSP) and the Operations Panel (OPSP)	Mapping of Annex 10 system performance requirements to the new approach classification in Annex 6	27 February 2013 15 July 2013 13 November 2014
89	Navigation Systems Panel (NSP) Working Group of the Whole	Global Navigation Satellite System (GNSS); editorial amendments	3 March 2014 14 July 2014 13 November 2014
90	Fourteenth and fifteenth meetings of the Navigation Systems Panel (NSP) Working Group of the Whole; and fifth joint meeting of the NSP Working Groups 1 and 2	a) Global navigation satellite system (GNSS); b) Instrument landing system (ILS); and c) Rationalization of conventional navigation systems.	22 February 2016 11 July 2016 10 November 2016
91 (7th Edition)	Second meeting of the Navigation Systems Panel (NSP/2); third meeting of the Navigation Systems Panel (NSP/3); and the twelfth meeting of the Aeronautical Information Service (AIS) Aeronautical Information Management (AIM) Study Group (AIS-AIMSG/12)	a) The global navigation satellite system (GNSS) and the instrument landing system (ILS); b) ground-based augmentation system (GBAS), satellite-based augmentation system (SBAS) and the strategy for introduction and application of non-visual aids to approach and landing; and c) a consequential amendment concerning change of references as a result of the restructuring of Annex 15 and the introduction of PANS-AIM (Doc 10066).	7 March 2018 16 July 2018 8 November 2018

Amendment	*Source(s)*	*Subject(s)*	*Adopted Effective Applicable*
92	Fourth and fifth meetings of the Navigation Systems Panel (NSP/4 and NSP/5)	a) Instrument landing system (ILS) facility performance categories; b) provision of information on the operational status of radio navigation services; c) update of satellite-based augmentation system (SBAS) provisions to introduce new SBAS service providers, a new Coordinated Universal Time (UTC) standard identifier, and GPS issue of data (IOD) monitoring requirements; d) provisions to ensure compatibility of the ground-based augmentation system (GBAS) very high frequency (VHF) data broadcast (VDB) with ILS and VHF omnidirectional radio range (VOR); e) clarifications and corrections to GBAS provisions; and f) additional guidance on global navigation satellite system (GNSS) integrity alert limits.	9 March 2020 20 July 2020 5 November 2020
93 (8th Edition)	Sixth meeting of the Navigation Systems Panel (NSP/6)	a) support of the introduction of dual-frequency, multi-constellation (DFMC) global navigation satellite system (GNSS) by adding provisions for additional frequencies of operation for the global positioning system (GPS), the global navigation satellite system (GLONASS) and the satellite-based augmentation system (SBAS), and by introducing provisions for the new BeiDou Navigation Satellite System (BDS) and Galileo system; and b) support of ionospheric gradient mitigation for the ground-based augmentation system (GBAS).	20 March 2023 31 July 2023 2 November 2023
94	Seventh meeting of the Navigation Systems Panel (NSP/7), and one editorial amendment	Advanced receiver autonomous integrity monitoring (ARAIM), the global positioning system (GPS), the Galileo system, the satellite-based augmentation system (SBAS), the ground-based augmentation system (GBAS), distance-measuring equipment (DME) and frequency assignment planning for instrument landing system (ILS), VHF omnidirectional radio range (VOR), DME and GBAS.	28 March 2025 4 August 2025 27 November 2025

* Did not affect any Standards or Recommended Practices.

INTERNATIONAL STANDARDS AND RECOMMENDED PRACTICES

CHAPTER 1. DEFINITIONS

Note 1.— All references to "Radio Regulations" are to the Radio Regulations published by the International Telecommunication Union (ITU). Radio Regulations are amended from time to time by the decisions embodied in the Final Acts of World Radiocommunication Conferences held normally every two to three years. Further information on the ITU processes as they relate to aeronautical radio system frequency use is contained in the Handbook on Radio Frequency Spectrum Requirements for Civil Aviation including statement of approved ICAO policies *(Doc 9718).*

Note 2.— Annex 10, Volume I includes Standards and Recommended Practices for certain forms of equipment for air navigation aids. While the Contracting State will determine the necessity for specific installations in accordance with the conditions prescribed in the relevant Standard or Recommended Practice, review of the need for specific installation and the formulation of ICAO opinion and recommendations to Contracting States concerned is carried out periodically by Council, ordinarily on the basis of recommendations of Regional Air Navigation Meetings (Doc 8144 — Directives to Regional Air Navigation Meetings and Rules of Procedure for their Conduct).

Note 3.— The terminology used in this Annex to refer to instrument approach operations is based on a previous version of the Annex 6 classification of instrument approach and landing operations. It can be mapped to the Annex 6 definitions as follows:

Performance requirements in support of instrument approach operations		
Annex 10 system performance		Annex 6 method — Approach operation category
Non-precision approach (NPA)		2D-Type A (1)
Approach with vertical guidance (APV)		3D-Type A (2)
Precision approach (PA)	Category I, DH equal to or greater than 75 m (250 ft)	3D-Type A (3)
	Category I, DH equal to or greater than 60 m (200 ft) and less than 75 m (250 ft)	3D-Type B — CAT I (3)
	Category II	3D-Type B — CAT II
	Category III	3D-Type B — CAT III

(1) Without vertical guidance.
(2) With barometric or SBAS vertical guidance.
(3) With ILS, MLS, GBAS or SBAS vertical guidance.

When the following terms are used in this volume, they have the following meanings:

Altitude. The vertical distance of a level, a point or an object considered as a point, measured from mean sea level (MSL).

Area navigation (RNAV). A method of navigation which permits aircraft operation on any desired flight path within the coverage of ground- or space-based navigation aids or within the limits of the capability of self-contained aids, or a combination of these.

Note.— Area navigation includes performance-based navigation as well as other operations that do not meet the definition of performance-based navigation.

Effective acceptance bandwidth. The range of frequencies with respect to the assigned frequency for which reception is assured when all receiver tolerances have been taken into account.

Effective adjacent channel rejection. The rejection that is obtained at the appropriate adjacent channel frequency when all relevant receiver tolerances have been taken into account.

Elevation. The vertical distance of a point or a level, on or affixed to the surface of the earth, measured from mean sea level.

Essential radio navigation service. A radio navigation service whose disruption has a significant impact on operations in the affected airspace or aerodrome.

Fan marker beacon. A type of radio beacon, the emissions of which radiate in a vertical fan-shaped pattern.

Height. The vertical distance of a level, a point or an object considered as a point, measured from a specified datum.

Human Factors principles. Principles which apply to design, certification, training, operations and maintenance and which seek safe interface between the human and other system components by proper consideration to human performance.

Mean power (of a radio transmitter). The average power supplied to the antenna transmission line by a transmitter during an interval of time sufficiently long compared with the lowest frequency encountered in the modulation taken under normal operating conditions.

Note.— A time of 1/10 second during *which the mean power is greatest will be selected normally.*

Navigation specification. A set of aircraft and flight crew requirements needed to support performance-based navigation operations within a defined airspace. There are two kinds of navigation specifications:

Required navigation performance (RNP) specification*.* A navigation specification based on area navigation that includes the requirement for performance monitoring and alerting, designated by the prefix RNP, e.g. RNP 4, RNP APCH.

Area navigation (RNAV) specification. A navigation specification based on area navigation that does not include the requirement for performance monitoring and alerting, designated by the prefix RNAV, e.g. RNAV 5, RNAV 1.

Note.1— The Performance-based Navigation (PBN) Manual *(Doc 9613), Volume II, contains detailed guidance on navigation specifications.*

Note 2.— The term RNP, previously defined as "a statement of the navigation performance necessary for operation within a defined airspace", has been removed from this Annex as the concept of RNP has been overtaken by the concept of PBN. The term RNP in this Annex is now solely used in the context of navigation specifications that require performance monitoring and alerting, e.g. RNP 4 refers to the aircraft and operating requirements, including a 4 NM lateral performance with on-board performance monitoring and alerting that are detailed in Doc 9613.

Performance-based navigation (PBN). Area navigation based on performance requirements for aircraft operating along an ATS route, on an instrument approach procedure or in a designated airspace.

Note.— Performance requirements are expressed in navigation specifications (RNAV specification, RNP specification) in terms of accuracy, integrity, continuity, availability and functionality needed for the proposed operation in the context of a particular airspace concept.

Pressure-altitude. An atmospheric pressure expressed in terms of altitude which corresponds to that pressure in the Standard Atmosphere.

Protected service volume. A part of the facility coverage where the facility provides a particular service in accordance with relevant SARPs and within which the facility is afforded frequency protection.

Radio navigation service. A service providing guidance information or position data for the efficient and safe operation of aircraft supported by one or more radio navigation aids.

Touchdown. The point where the nominal glide path intercepts the runway.

Note.— "Touchdown" as defined above is only a datum and is not necessarily the actual point at which the aircraft will touch the runway.

Z marker beacon. A type of radio beacon, the emissions of which radiate in a vertical cone-shaped pattern.

CHAPTER 2. GENERAL PROVISIONS FOR RADIO NAVIGATION AIDS

2.1 Standard radio navigation aids

2.1.1 The standard radio navigation aids shall be:

a) the instrument landing system (ILS) conforming to the Standards contained in Chapter 3, 3.1;

b) the microwave landing system (MLS) conforming to the Standards contained in Chapter 3, 3.11;

c) the global navigation satellite system (GNSS) conforming to the Standards contained in Chapter 3, 3.7;

d) the VHF omnidirectional radio range (VOR) conforming to the Standards contained in Chapter 3, 3.3;

e) the non-directional radio beacon (NDB) conforming to the Standards contained in Chapter 3, 3.4;

f) the distance measuring equipment (DME) conforming to the Standards contained in Chapter 3, 3.5; and

g) the en-route VHF marker beacon conforming to the Standards contained in Chapter 3, 3.6.

Note 1.— Since visual reference is essential for the final stages of approach and landing, the installation of a radio navigation aid does not obviate the need for visual aids to approach and landing in conditions of low visibility.

Note 2.— It is intended that introduction and application of radio navigation aids to support precision approach and landing operations will be in accordance with the strategy shown in Attachment B. It is intended that rationalization of conventional radio navigation aids and evolution toward supporting performance-based navigation will be in accordance with the strategy shown in Attachment H.

Note 3.— Categories of precision approach and landing operations are classified in Annex 6, Part I, Chapter 1.

Note 4.— Information on operational objectives associated with ILS facility performance categories is given in Attachment C, 2.1 and 2.14.

Note 5.— Information on operational objectives associated with MLS facility performance is given in Attachment G, 11.

2.1.2 Differences in radio navigation aids in any respect from the Standards of Chapter 3 shall be published in an Aeronautical Information Publication (AIP).

2.1.3 Wherever there is installed a radio navigation aid that is neither an ILS nor an MLS, but which may be used in whole or in part with aircraft equipment designed for use with the ILS or MLS, full details of parts that may be so used shall be published in an Aeronautical Information Publication (AIP).

Note.— This provision is to establish a requirement for promulgation of relevant information rather than to authorize such installations.

2.1.4 GNSS-specific provisions

2.1.4.1 It shall be permissible to terminate a GNSS satellite service provided by one of its elements (Chapter 3, 3.7.2) on the basis of at least a six-year advance notice by a service provider.

2.1.4.2 **Recommendation.—** *A State that approves GNSS-based operations should ensure that GNSS data relevant to those operations are recorded.*

Note 1.— These recorded data can support accident and incident investigations. They may also support periodic analysis to verify the GNSS performance parameters detailed in the relevant Standards in this Annex.

Note 2.— Guidance material on the recording of GNSS parameters and on GNSS performance assessment is contained in Attachment D, 11 and 12.

2.1.4.3 **Recommendation.—** *Recordings should be retained for a period of at least 14 days. When the recordings are pertinent to accident and incident investigations, they should be retained for longer periods until it is evident that they will no longer be required.*

2.1.5 Precision approach radar

2.1.5.1 A precision approach radar (PAR) system, where installed and operated as a radio navigation aid together with equipment for two-way communication with aircraft and facilities for the efficient coordination of these elements with air traffic control, shall conform to the Standards contained in Chapter 3, 3.2.

Note 1.— The precision approach radar (PAR) element of the precision approach radar system may be installed and operated without the surveillance radar element (SRE), when it is determined that the SRE is not necessary to meet the requirements of air traffic control for the handling of aircraft.

Note 2.— Although SRE is not considered, in any circumstances, a satisfactory alternative to the precision approach radar system, the SRE may be installed and operated without the PAR for the assistance of air traffic control in handling aircraft intending to use a radio navigation aid, or for surveillance radar approaches and departures.

2.1.6 **Recommendation.—** *When a radio navigation aid is provided to support precision approach and landing, it should be supplemented, as necessary, by a source or sources of guidance information which, when used in conjunction with appropriate procedures, will provide effective guidance to, and efficient coupling (manual or automatic) with, the desired reference path.*

Note.— DME, GNSS, NDB, VOR and aircraft navigation systems have been used for such purposes.

2.2 Ground and flight testing

2.2.1 Radio navigation aids of the types covered by the specifications in Chapter 3 and available for use by aircraft engaged in international air navigation shall be the subject of periodic ground and flight tests.

Note.— Guidance on the ground and flight testing of ICAO standard facilities, including the periodicity of the testing, is contained in Attachment C and in the Manual on Testing of Radio Navigation Aids *(Doc 8071).*

2.3 Provision of information on the operational status of radio navigation services

2.3.1 Aerodrome control towers and units providing approach control service shall be provided with information on the operational status of radio navigation services essential for approach, landing and take-off at the aerodrome(s) with which they are concerned, on a timely basis consistent with the use of the service(s) involved.

Note.— Guidance material on the application of this Standard in the case of PBN-based operations supported by GNSS is contained in the Performance-based Navigation (PBN) Manual *(Doc 9613).*

2.4 Power supply for radio navigation aids and communication systems

2.4.1 Radio navigation aids and ground elements of communication systems of the types specified in Annex 10 shall be provided with suitable power supplies and means to ensure continuity of service consistent with the use of the service(s) involved.

Note.— Guidance material on power supply switch-over is contained in Attachment C, 8.

2.5 Human Factors considerations

2.5.1 **Recommendation.—** *Human Factors principles should be observed in the design and certification of radio navigation aids.*

Note.— Guidance material on Human Factors principles can be found in the Human Factors Training Manual *(Doc 9683) and Circular 249* (Human Factors Digest No. 11 — Human Factors in CNS/ATM Systems).

CHAPTER 3. SPECIFICATIONS FOR RADIO NAVIGATION AIDS

Note.— Specifications concerning the siting and construction of equipment and installations on operational areas aimed at reducing the hazard to aircraft to a minimum are contained in Annex 14, Chapter 8.

3.1 Specification for ILS

3.1.1 Definitions

Angular displacement sensitivity. The ratio of measured DDM to the corresponding angular displacement from the appropriate reference line.

Back course sector. The course sector which is situated on the opposite side of the localizer from the runway.

Course line. The locus of points nearest to the runway centre line in any horizontal plane at which the DDM is zero.

Course sector. A sector in a horizontal plane containing the course line and limited by the loci of points nearest to the course line at which the DDM is 0.155.

DDM — Difference in depth of modulation. The percentage modulation depth of the larger signal minus the percentage modulation depth of the smaller signal, divided by 100.

Displacement sensitivity (localizer). The ratio of measured DDM to the corresponding lateral displacement from the appropriate reference line.

Facility Performance Category I — ILS. An ILS which provides guidance information from the coverage limit of the ILS to the point at which the localizer course line intersects the ILS glide path at a height of 30 m (100 ft) or less above the horizontal plane containing the threshold.

Note.— The lower limit is set to 30 m (100 ft) below the minimum Category I decision height (DH).

Facility Performance Category II — ILS. An ILS which provides guidance information from the coverage limit of the ILS to the point at which the localizer course line intersects the ILS glide path at a height of 15 m (50 ft) or less above the horizontal plane containing the threshold.

Note.— The lower limit is set to 15 m (50 ft) below the minimum Category II decision height (DH).

Facility Performance Category III — ILS. An ILS which, with the aid of ancillary equipment where necessary, provides guidance information from the coverage limit of the facility to, and along, the surface of the runway.

Front course sector. The course sector which is situated on the same side of the localizer as the runway.

Half course sector. The sector, in a horizontal plane containing the course line and limited by the loci of points nearest to the course line at which the DDM is 0.0775.

Half ILS glide path sector. The sector in the vertical plane containing the ILS glide path and limited by the loci of points nearest to the glide path at which the DDM is 0.0875.

ILS continuity of service. That quality which relates to the rarity of radiated signal interruptions. The level of continuity of service of the localizer or the glide path is expressed in terms of the probability of not losing the radiated guidance signals.

ILS glide path. That locus of points in the vertical plane containing the runway centre line at which the DDM is zero, which, of all such loci, is the closest to the horizontal plane.

ILS glide path angle. The angle between a straight line which represents the mean of the ILS glide path and the horizontal.

ILS glide path sector. The sector in the vertical plane containing the ILS glide path and limited by the loci of points nearest to the glide path at which the DDM is 0.175.

Note.— The ILS glide path sector is located in the vertical plane containing the runway centre line, and is divided by the radiated glide path in two parts called upper sector and lower sector, referring respectively to the sectors above and below the glide path.

ILS integrity. That quality which relates to the trust which can be placed in the correctness of the information supplied by the facility. The level of integrity of the localizer or the glide path is expressed in terms of the probability of not radiating false guidance signals.

ILS Point "A". A point on the ILS glide path measured along the extended runway centre line in the approach direction a distance of 7.5 km (4 NM) from the threshold.

ILS Point "B". A point on the ILS glide path measured along the extended runway centre line in the approach direction a distance of 1 050 m (3 500 ft) from the threshold.

ILS Point "C". A point through which the downward extended straight portion of the nominal ILS glide path passes at a height of 30 m (100 ft) above the horizontal plane containing the threshold.

ILS Point "D". A point 4 m (12 ft) above the runway centre line and 900 m (3 000 ft) from the threshold in the direction of the localizer.

ILS Point "E". A point 4 m (12 ft) above the runway centre line and 600 m (2 000 ft) from the stop end of the runway in the direction of the threshold.

Note.— See Attachment C, Figure C-1.

ILS reference datum (Point "T"). A point at a specified height located above the intersection of the runway centre line and the threshold and through which the downward extended straight portion of the ILS glide path passes.

Two-frequency glide path system. An ILS glide path in which coverage is achieved by the use of two independent radiation field patterns spaced on separate carrier frequencies within the particular glide path channel.

Two-frequency localizer system. A localizer system in which coverage is achieved by the use of two independent radiation field patterns spaced on separate carrier frequencies within the particular localizer VHF channel.

3.1.2 Basic requirements

3.1.2.1 The ILS shall comprise the following basic components:

a) VHF localizer equipment, associated monitor system, remote control and indicator equipment;

b) UHF glide path equipment, associated monitor system, remote control and indicator equipment;

c) an appropriate means to enable glide path verification checks.

Note.— The Procedures for Air Navigation Services — Aircraft Operations *(PANS-OPS) (Doc 8168) provide guidance on the conduct of glide path verification checks.*

3.1.2.1.1 **Recommendation.—** *Distance to threshold information to enable glide path verification checks should be provided by either VHF marker beacons or distance measuring equipment (DME), together with associated monitor systems and remote control and indicator equipment.*

3.1.2.1.2 If one or more VHF marker beacons are used to provide distance to threshold information, the equipment shall conform to the specifications in 3.1.7. If DME is used in lieu of marker beacons, the equipment shall conform to the specifications in 3.1.7.6.5.

Note.— Guidance material relative to the use of DME and/or other standard radio navigation aids as an alternative to the marker beacon is contained in Attachment C, 2.11.

3.1.2.1.3 Facility Performance Categories I, II and III — ILS shall provide indications at designated remote control points of the operational status of all ILS ground system components, as follows:

a) for all Facility Performance Category II and Category III ILS, the air traffic services unit involved in the control of aircraft on the final approach shall be one of the designated remote control points and shall receive information on the operational status of the ILS, with a delay commensurate with the requirements of the operational environment;

b) for a Facility Performance Category I ILS, if that ILS provides an essential radio navigation service, the air traffic services unit involved in the control of aircraft on the final approach shall be one of the designated remote control points and shall receive information on the operational status of the ILS, with a delay commensurate with the requirements of the operational environment.

Note.— The indications required by this Standard are intended as a tool to support air traffic management functions, and the applicable timeliness requirements are sized accordingly (consistently with 2.3.1).

3.1.2.2 The ILS shall be constructed and adjusted so that, at a specified distance from the threshold, similar instrumental indications in the aircraft represent similar displacements from the course line or ILS glide path as appropriate, irrespective of the particular ground installation in use.

3.1.2.3 The localizer and glide path components specified in 3.1.2.1 a) and b) which form part of a Facility Performance Category I — ILS shall comply at least with the Standards in 3.1.3 and 3.1.5 respectively, excepting those in which application to Facility Performance Category II — ILS is prescribed.

3.1.2.4 The localizer and glide path components specified in 3.1.2.1 a) and b) which form part of a Facility Performance Category II — ILS shall comply with the Standards applicable to these components in a Facility Performance Category I — ILS, as supplemented or amended by the Standards in 3.1.3 and 3.1.5 in which application to Facility Performance Category II — ILS is prescribed.

3.1.2.5 The localizer and glide path components and other ancillary equipment specified in 3.1.2.1.3, which form part of a Facility Performance Category III — ILS, shall otherwise comply with the Standards applicable to these components in Facility Performance Categories I and II — ILS, except as supplemented by the Standards in 3.1.3 and 3.1.5 in which application to Facility Performance Category III — ILS is prescribed.

3.1.2.6 To ensure an adequate level of safety, the ILS shall be so designed and maintained that the probability of operation within the performance requirements specified is of a high value, consistent with the category of operational performance concerned.

3.1.2.6.1 For Facility Performance Category II and III localizers and glide paths, the level of integrity and continuity of service shall be at least Level 3, as defined in 3.1.3.12.4 (localizer) and 3.1.5.8.4 (glide path).

Note.— The specifications for Facility Performance Categories II and III — ILS are intended to achieve the highest degree of system integrity, reliability and stability of operation under the most adverse environmental conditions to be encountered. Guidance material to achieve this objective is given in 2.8 of Attachment C.

3.1.2.7 At those locations where two separate ILS facilities serve opposite ends of a single runway, and operationally harmful interference would be present if both facilities were transmitting, an interlock shall ensure that only the localizer serving the approach direction in use shall radiate.

Note 1.— While a low height overflight of a transmitting localizer may generate interference within airborne ILS receivers, this interference may only be considered as operationally harmful when it occurs in specific conditions, e.g. without visual cues of the runway, or when the autopilot is engaged. Additional guidance material is contained in 2.1.8 and 2.13 of Attachment C.

Note 2.— Interference may also be caused by transmissions from other localizers not serving the opposite end of the same runway (i.e. crossing, parallel or adjacent runways). In such cases, use of interlock to prevent the interference can also be considered.

Note 3.— An interlock can be provided through hardware, software or an equivalent procedural means.

3.1.2.7.1 At locations where ILS facilities serving opposite ends of the same runway or different runways at the same airport use the same paired frequencies, an interlock shall ensure that only one facility shall radiate at a time. When switching from one ILS facility to another, radiation from both shall be suppressed for not less than 20 seconds.

Note.— Additional guidance material on the operation of localizers on the same frequency channel is contained in Volume V, Chapter 4.

3.1.2.8 At those locations where an ILS facility and a GBAS facility serve opposite approach directions to the same runway, when the approach direction in use is not the direction served by the ILS, the localizer shall not radiate when GBAS low visibility operations that require GAST D are being conducted, except where it can be demonstrated that the localizer signal supports compliance with the requirements in Appendix B, 3.6.8.2.2.5 and 3.6.8.2.2.6 defining the desired to undesired signal ratios and the maximum adjacent channel power tolerable by the GBAS VDB receiver.

Note.— If the localizer is radiating there is a possibility of interference to the GBAS VDB signals in the region where the aircraft overflies the localizer. A means to ensure that the localizer does not radiate can be provided through either hardware or software interlock or a procedural mitigation. Additional guidance material is contained in Attachment C, 2.1.8.1 and Attachment D, 7.2.3.3.

3.1.3 VHF localizer and associated monitor

Introduction. The specifications in this section cover ILS localizers providing either positive guidance information over 360 degrees of azimuth, or providing such guidance only within a specified portion of the front coverage (see 3.1.3.7.4). Where ILS localizers providing positive guidance information in a limited sector are installed, information from some suitably located navigation aid, together with appropriate procedures, will generally be required to ensure that any misleading guidance information outside the sector is not operationally significant.

3.1.3.1 *General*

3.1.3.1.1 The radiation from the localizer antenna system shall produce a composite field pattern which is amplitude modulated by a 90 Hz and a 150 Hz tone. The radiation field pattern shall produce a course sector with one tone predominating on one side of the course and with the other tone predominating on the opposite side.

3.1.3.1.2 When an observer faces the localizer from the approach end of a runway, the depth of modulation of the radio frequency carrier due to the 150 Hz tone shall predominate on the observer's right hand and that due to the 90 Hz tone shall predominate on the observer's left hand.

3.1.3.1.3 All horizontal angles employed in specifying the localizer field patterns shall originate from the centre of the localizer antenna system which provides the signals used in the front course sector.

3.1.3.2 *Radio frequency*

3.1.3.2.1 The localizer shall operate in the band 108 MHz to 111.975 MHz. Where a single radio frequency carrier is used, the frequency tolerance shall not exceed plus or minus 0.005 per cent. Where two radio frequency carriers are used, the frequency tolerance shall not exceed 0.002 per cent and the nominal band occupied by the carriers shall be symmetrical about the assigned frequency. With all tolerances applied, the frequency separation between the carriers shall not be less than 5 kHz nor more than 14 kHz.

3.1.3.2.2 The emission from the localizer shall be horizontally polarized. The vertically polarized component of the radiation on the course line shall not exceed that which corresponds to a DDM error of 0.016 when an aircraft is positioned on the course line and is in a roll attitude of 20 degrees from the horizontal.

3.1.3.2.2.1 For Facility Performance Category II localizers, the vertically polarized component of the radiation on the course line shall not exceed that which corresponds to a DDM error of 0.008 when an aircraft is positioned on the course line and is in a roll attitude of 20 degrees from the horizontal.

3.1.3.2.2.2 For Facility Performance Category III localizers, the vertically polarized component of the radiation within a sector bounded by 0.02 DDM either side of the course line shall not exceed that which corresponds to a DDM error of 0.005 when an aircraft is in a roll attitude of 20 degrees from the horizontal.

3.1.3.2.3 For Facility Performance Category III localizers, signals emanating from the transmitter shall contain no components which result in an apparent course line fluctuation of more than 0.005 DDM peak to peak in the frequency band 0.01 Hz to 10 Hz.

3.1.3.3 *Coverage*

Note.— Guidance material on localizer coverage is given in Attachment C, 2.1.10 and Figures C-7A, C-7B, C-8A and C-8B.

3.1.3.3.1 The localizer shall provide signals sufficient to allow satisfactory operation of a typical aircraft installation within the localizer and glide path coverage sectors. The localizer coverage sector shall extend from the centre of the localizer antenna system to distances of:

46.3 km (25 NM) within plus or minus 10 degrees from the front course line;

31.5 km (17 NM) between 10 degrees and 35 degrees from the front course line;

18.5 km (10 NM) outside of plus or minus 35 degrees from the front course line if coverage is provided;

except that, where topographical features dictate or operational requirements permit, the limits may be reduced down to 33.3 km (18 NM) within the plus or minus 10-degree sector and 18.5 km (10 NM) within the remainder of the coverage when alternative navigational means provide satisfactory coverage within the intermediate approach area. The localizer signals shall be receivable at the distances specified at and above a height of 600 m (2 000 ft) above the elevation of the threshold, or 300 m (1 000 ft) above the elevation of the highest point within the intermediate and final approach areas, whichever is the higher, except that, where needed to protect ILS performance and if operational requirements permit, the lower limit of coverage at angles beyond 15 degrees from the front course line shall be raised linearly from its height at 15 degrees to as high as 1 350 m (4 500 ft) above the elevation of the threshold at 35 degrees from the front course line. Such signals shall be receivable, to the distances specified, up to a surface extending outward from the localizer antenna and inclined at 7 degrees above the horizontal.

Note.— Where intervening obstacles penetrate the lower surface, it is intended that guidance need not be provided at less than line-of-sight heights .

3.1.3.3.2 In all parts of the coverage volume specified in 3.1.3.3.1, other than as specified in 3.1.3.3.2.1, 3.1.3.3.2.2 and 3.1.3.3.2.3, the field strength shall be not less than 40 microvolts per metre (minus 114 dBW/m^2).

Note.— This minimum field strength is required to permit satisfactory operational usage of ILS localizer facilities.

3.1.3.3.2.1 For Facility Performance Category I localizers, the minimum field strength on the ILS glide path and within the localizer course sector from a distance of 18.5 km (10 NM) to a height of 30 m (100 ft) above the horizontal plane containing the threshold shall be not less than 90 microvolts per metre (minus 107 dBW/m^2).

3.1.3.3.2.2 For Facility Performance Category II localizers, the minimum field strength on the ILS glide path and within the localizer course sector shall be not less than 100 microvolts per metre (minus 106 dBW/m^2) at a distance of 18.5 km (10 NM) increasing to not less than 200 microvolts per metre (minus 100 dBW/m^2) at a height of 15 m (50 ft) above the horizontal plane containing the threshold.

3.1.3.3.2.3 For Facility Performance Category III localizers, the minimum field strength on the ILS glide path and within the localizer course sector shall be not less than 100 microvolts per metre (minus 106 dBW/m^2) at a distance of 18.5 km (10 NM), increasing to not less than 200 microvolts per metre (minus 100 dBW/m^2) at 6 m (20 ft) above the horizontal plane containing the threshold. From this point to a further point 4 m (12 ft) above the runway centre line, and 300 m (1 000 ft) from the threshold in the direction of the localizer, and thereafter at a height of 4 m (12 ft) along the length of the runway in the direction of the localizer, the field strength shall be not less than 100 microvolts per metre (minus 106 dBW/m^2).

Note.— The field strengths given in 3.1.3.3.2.2 and 3.1.3.3.2.3 are necessary to provide the signal-to-noise ratio required for improved integrity.

3.1.3.3.3 **Recommendation.—** *Above 7 degrees, the signals should be reduced to as low a value as practicable.*

Note 1.— The requirements in 3.1.3.3.1, 3.1.3.3.2.1, 3.1.3.3.2.2 and 3.1.3.3.2.3 are based on the assumption that the aircraft is heading directly toward the facility.

Note 2.— Guidance material on significant airborne receiver parameters is given in 2.2.2 of Attachment C.

3.1.3.3.4 When coverage is achieved by a localizer using two radio frequency carriers, one carrier providing a radiation field pattern in the front course sector and the other providing a radiation field pattern outside that sector, the ratio of the two carrier signal strengths in space within the front course sector to the coverage limits specified at 3.1.3.3.1 shall not be less than 10 dB.

Note.— Guidance material on localizers achieving coverage with two radio frequency carriers is given in the Note to 3.1.3.11.2 and in 2.7 of Attachment C.

3.1.3.3.5 **Recommendation.—** *For Facility Performance Category III localizers, the ratio of the two carrier signal strengths in space within the front course sector should not be less than 16 dB.*

3.1.3.4 *Course structure*

3.1.3.4.1 For Facility Performance Category I localizers, bends in the course line shall not have amplitudes which exceed the following:

Zone	*Amplitude (DDM) (95% probability)*
Outer limit of coverage to ILS Point “A”	0.031
ILS Point “A” to ILS Point “B”	0.031 at ILS Point “A” decreasing at a linear rate to 0.015 at ILS Point “B”
ILS Point “B” to ILS Point “C”	0.015

3.1.3.4.2 For Facility Performance Categories II and III localizers, bends in the course line shall not have amplitudes which exceed the following:

Zone	*Amplitude (DDM) (95% probability)*
Outer limit of coverage to ILS Point “A”	0.031
ILS Point “A” to ILS Point “B”	0.031 at ILS Point “A” decreasing at a linear rate to 0.005 at ILS Point “B”
ILS Point “B” to the ILS reference datum	0.005

and, for Facility Performance Category III only:

ILS reference datum to ILS Point "D"	0.005
ILS Point "D" to ILS Point "E"	0.005 at ILS Point "D" increasing at a linear rate to 0.010 at ILS Point "E"

Note 1.— The amplitudes referred to in 3.1.3.4.1 and 3.1.3.4.2 are the DDMs due to bends as realized on the mean course line, when correctly adjusted.

Note 2.— Guidance material relevant to the localizer course structure is given in 2.1.3, 2.1.5, 2.1.6 and 2.1.9 of Attachment C.

3.1.3.5 *Carrier modulation*

3.1.3.5.1 The nominal depth of modulation of the radio frequency carrier due to each of the 90 Hz and 150 Hz tones shall be 20 per cent along the course line.

3.1.3.5.2 The depth of modulation of the radio frequency carrier due to each of the 90 Hz and 150 Hz tones shall be within the limits of 18 and 22 per cent.

3.1.3.5.3 The following tolerances shall be applied to the frequencies of the modulating tones:

a) the modulating tones shall be 90 Hz and 150 Hz within plus or minus 2.5 per cent;

b) the modulating tones shall be 90 Hz and 150 Hz within plus or minus 1.5 per cent for Facility Performance Category II installations;

c) the modulating tones shall be 90 Hz and 150 Hz within plus or minus 1 per cent for Facility Performance Category III installations;

d) the total harmonic content of the 90 Hz tone shall not exceed 10 per cent; additionally, for Facility Performance Category III localizers, the second harmonic of the 90 Hz tone shall not exceed 5 per cent;

e) the total harmonic content of the 150 Hz tone shall not exceed 10 per cent.

3.1.3.5.3.1 **Recommendation.—** *For Facility Performance Category I — ILS, the modulating tones should be 90 Hz and 150 Hz within plus or minus 1.5 per cent where practicable.*

3.1.3.5.3.2 For Facility Performance Category III localizers, the depth of amplitude modulation of the radio frequency carrier at the power supply frequency or its harmonics, or by other unwanted components, shall not exceed 0.5 per cent. Harmonics of the supply, or other unwanted noise components that may intermodulate with the 90 Hz and 150 Hz navigation tones or their harmonics to produce fluctuations in the course line, shall not exceed 0.05 per cent modulation depth of the radio frequency carrier.

3.1.3.5.3.3 The modulation tones shall be phase-locked so that within the half course sector, the demodulated 90 Hz and 150 Hz wave forms pass through zero in the same direction within:

a) for Facility Performance Categories I and II localizers: 20 degrees; and

b) for Facility Performance Category III localizers: 10 degrees,

of phase relative to the 150 Hz component, every half cycle of the combined 90 Hz and 150 Hz wave form.

Note 1.— The definition of phase relationship in this manner is not intended to imply a requirement to measure the phase within the half course sector.

Note 2.— Guidance material relative to such measurement is given at Figure C-6 of Attachment C.

3.1.3.5.3.4 With two-frequency localizer systems, 3.1.3.5.3.3 shall apply to each carrier. In addition, the 90 Hz modulating tone of one carrier shall be phase-locked to the 90 Hz modulating tone of the other carrier so that the demodulated wave forms pass through zero in the same direction within:

a) for Facility Performance Categories I and II localizers: 20 degrees; and

b) for Facility Performance Category III localizers: 10 degrees,

of phase relative to 90 Hz. Similarly, the 150 Hz tones of the two carriers shall be phase-locked so that the demodulated wave forms pass through zero in the same direction within:

1) for Facility Performance Categories I and II localizers: 20 degrees; and

2) for Facility Performance Category III localizers: 10 degrees,

of phase relative to 150 Hz.

3.1.3.5.3.5 Alternative two-frequency localizer systems that employ audio phasing different from the normal in-phase conditions described in 3.1.3.5.3.4 shall be permitted. In this alternative system, the 90 Hz to 90 Hz phasing and the 150 Hz to 150 Hz phasing shall be adjusted to their nominal values to within limits equivalent to those stated in 3.1.3.5.3.4.

Note.— This is to ensure correct airborne receiver operation in the region away from the course line where the two carrier signal strengths are approximately equal.

3.1.3.5.3.6 **Recommendation.—** *The sum of the modulation depths of the radio frequency carrier due to the 90 Hz and 150 Hz tones should not exceed 60 per cent or be less than 30 per cent within the required coverage.*

3.1.3.5.3.6.1 For equipment first installed after 1 January 2000, the sum of the modulation depths of the radio frequency carrier due to the 90 Hz and 150 Hz tones shall not exceed 60 per cent or be less than 30 per cent within the required coverage.

Note 1.— If the sum of the modulation depths is greater than 60 per cent for Facility Performance Category I localizers, the nominal displacement sensitivity may be adjusted as provided for in 3.1.3.7.1 to achieve the above modulation limit.

Note 2.— For two-frequency systems, the standard for maximum sum of modulation depths does not apply at or near azimuths where the course and clearance carrier signal levels are equal in amplitude (i.e. at azimuths where both transmitting systems have a significant contribution to the total modulation depth).

Note 3.— The standard for minimum sum of modulation depths is based on the malfunctioning alarm level being set as high as 30 per cent as stated in 2.3.3 of Attachment C.

3.1.3.5.3.7 When utilizing a localizer for radiotelephone communications, the sum of the modulation depths of the radio frequency carrier due to the 90 Hz and 150 Hz tones shall not exceed 65 per cent within 10 degrees of the course line and shall not exceed 78 per cent at any other point around the localizer.

3.1.3.5.4 **Recommendation.—** *Undesired frequency and phase modulation on ILS localizer radio frequency carriers that can affect the displayed DDM values in localizer receivers should be minimized to the extent practical.*

Note.— Relevant guidance material is given in 2.15 of Attachment C.

3.1.3.6 *Course alignment accuracy*

3.1.3.6.1 The mean course line shall be adjusted and maintained within limits equivalent to the following displacements from the runway centre line at the ILS reference datum:

a) for Facility Performance Category I localizers: plus or minus 10.5 m (35 ft), or the linear equivalent of 0.015 DDM, whichever is less;

b) for Facility Performance Category II localizers: plus or minus 7.5 m (25 ft);

c) for Facility Performance Category III localizers: plus or minus 3 m (10 ft).

3.1.3.6.2 **Recommendation.—** *For Facility Performance Category II localizers, the mean course line should be adjusted and maintained within limits equivalent to plus or minus 4.5 m (15 ft) displacement from runway centre line at the ILS reference datum.*

Note 1.— It is intended that Facility Performance Categories II and III installations be adjusted and maintained so that the limits specified in 3.1.3.6.1 and 3.1.3.6.2 are reached on very rare occasions. It is further intended that design and operation of the total ILS ground system be of sufficient integrity to accomplish this aim.

Note 2.— It is intended that new Facility Performance Category II installations are to meet the requirements of 3.1.3.6.2.

Note 3.— Guidance material on measurement of localizer course alignment is given in 2.1.3 of Attachment C. Guidance material on protecting localizer course alignment is given in 2.1.9 of Attachment C.

3.1.3.7 *Displacement sensitivity*

3.1.3.7.1 The nominal displacement sensitivity within the half course sector shall be the equivalent of 0.00145 DDM/m (0.00044 DDM/ft) at the ILS reference datum except that for Facility Performance Category I localizers, where the specified nominal displacement sensitivity cannot be met, the displacement sensitivity shall be adjusted as near as possible to that value. For Facility Performance Category I localizers on runway codes 1 and 2, the nominal displacement sensitivity shall be achieved at the ILS Point “B”. The maximum course sector angle shall not exceed six degrees.

Note.— Runway codes 1 and 2 are defined in Annex 14.

3.1.3.7.2 The lateral displacement sensitivity shall be adjusted and maintained within the limits of plus or minus:

a) 17 per cent of the nominal value for Facility Performance Categories I and II;

b) 10 per cent of the nominal value for Facility Performance Category III.

3.1.3.7.3 **Recommendation.—** *For Facility Performance Category II — ILS, displacement sensitivity should be adjusted and maintained within the limits of plus or minus 10 per cent where practicable.*

Note 1.— The figures given in 3.1.3.7.1, 3.1.3.7.2 and 3.1.3.7.3 are based upon a nominal sector width of 210 m (700 ft) at the appropriate point, i.e. ILS Point "B" on runway codes 1 and 2, and the ILS reference datum on other runways.

Note 2.— Guidance material on the alignment and displacement sensitivity of localizers using two radio frequency carriers is given in 2.7 of Attachment C.

Note 3.— Guidance material on measurement of localizer displacement sensitivity is given in 2.9 of Attachment C.

3.1.3.7.4 The increase of DDM shall be substantially linear with respect to angular displacement from the front course line (where DDM is zero) up to an angle on either side of the front course line where the DDM is 0.180. From that angle to plus or minus 10 degrees, the DDM shall not be less than 0.180. From plus or minus 10 degrees to plus or minus 35 degrees, the DDM shall not be less than 0.155. Where coverage is required outside of the plus or minus 35 degrees sector, the DDM in the area of the coverage, except in the back course sector, shall not be less than 0.155.

Note 1.— The linearity of change of DDM with respect to angular displacement is particularly important in the neighbourhood of the course line.

Note 2.— The above DDM in the 10-35 degree sector is to be considered a minimum requirement for the use of ILS as a landing aid. Wherever practicable, a higher DDM, e.g. 0.180, is advantageous to assist high speed aircraft to execute large angle intercepts at operationally desirable distances provided that limits on modulation percentage given in 3.1.3.5.3.6 are met.

Note 3.— Wherever practicable, the localizer capture level of automatic flight control systems is to be set at or below 0.175 DDM in order to prevent false localizer captures.

3.1.3.8 *Voice*

3.1.3.8.1 Facility Performance Categories I and II localizers may provide a ground-to-air radiotelephone communication channel to be operated simultaneously with the navigation and identification signals, provided that such operation shall not interfere in any way with the basic localizer function.

3.1.3.8.2 Facility Performance Category III localizers shall not provide such a channel, except where extreme care has been taken in the design and operation of the facility to ensure that there is no possibility of interference with the navigational guidance.

3.1.3.8.3 If the channel is provided, it shall conform with the following Standards:

3.1.3.8.3.1 The channel shall be on the same radio frequency carrier or carriers as used for the localizer function, and the radiation shall be horizontally polarized. Where two carriers are modulated with speech, the relative phases of the modulations on the two carriers shall be such as to avoid the occurrence of nulls within the coverage of the localizer.

3.1.3.8.3.2 The peak modulation depth of the carrier or carriers due to the radiotelephone communications shall not exceed 50 per cent but shall be adjusted so that:

a) the ratio of peak modulation depth due to the radiotelephone communications to that due to the identification signal is approximately 9:1;

b) the sum of modulation components due to use of the radiotelephone channel, navigation signals and identification signals shall not exceed 95 per cent.

3.1.3.8.3.3 The audio frequency characteristics of the radiotelephone channel shall be flat to within 3 dB relative to the level at 1 000 Hz over the range 300 Hz to 3 000 Hz.

3.1.3.9 *Identification*

3.1.3.9.1 The localizer shall provide for the simultaneous transmission of an identification signal, specific to the runway and approach direction, on the same radio frequency carrier or carriers as used for the localizer function. The transmission of the identification signal shall not interfere in any way with the basic localizer function.

3.1.3.9.2 The identification signal shall be produced by Class A2A modulation of the radio frequency carrier or carriers using a modulation tone of 1 020 Hz within plus or minus 50 Hz. The depth of modulation shall be between the limits of 5 and 15 per cent except that, where a radiotelephone communication channel is provided, the depth of modulation shall be adjusted so that the ratio of peak modulation depth due to radiotelephone communications to that due to the identification signal modulation is approximately 9:1 (see 3.1.3.8.3.2). The emissions carrying the identification signal shall be horizontally polarized. Where two carriers are modulated with identification signals, the relative phase of the modulations shall be such as to avoid the occurrence of nulls within the coverage of the localizer.

3.1.3.9.3 The identification signal shall employ the International Morse Code and consist of two or three letters. It may be preceded by the International Morse Code signal of the letter "I", followed by a short pause where it is necessary to distinguish the ILS facility from other navigational facilities in the immediate area.

3.1.3.9.4 The identification signal shall be transmitted by dots and dashes at a speed corresponding to approximately seven words per minute, and shall be repeated at approximately equal intervals, not less than six times per minute, at all times during which the localizer is available for operational use. When the transmissions of the localizer are not available for operational use, as, for example, after removal of navigation components, or during maintenance or test transmissions, the identification signal shall be suppressed. The dots shall have a duration of 0.1 second to 0.160 second. The dash duration shall be typically three times the duration of a dot. The interval between dots and/or dashes shall be equal to that of one dot plus or minus 10 per cent. The interval between letters shall not be less than the duration of three dots.

3.1.3.10 *Siting*

Note.— Guidance material relevant to siting localizer antennas in the runway and taxiway environment is given in 2.1.9 of Attachment C.

3.1.3.10.1 For Facility Performance Categories II and III, the localizer antenna system shall be located on the extension on the centre line of the runway at the stop end, and the equipment shall be adjusted so that the course lines will be in a vertical plane containing the centre line of the runway served. The antenna height and location shall be consistent with safe obstruction clearance practices.

3.1.3.10.2 For Facility Performance Category I, the localizer antenna system shall be located and adjusted as in 3.1.3.10.1, unless site constraints dictate that the antenna be offset from the centre line of the runway.

3.1.3.10.2.1 The offset localizer system shall be located and adjusted in accordance with the offset ILS provisions of the *Procedures for Air Navigation Services — Aircraft Operations* (PANS-OPS) (Doc 8168), Volume II, and the localizer standards shall be referenced to the associated fictitious threshold point.

3.1.3.11 *Monitoring*

3.1.3.11.1 The automatic monitor system shall provide a warning to the designated control points and cause one of the following to occur, within the period specified in 3.1.3.11.3.1, if any of the conditions stated in 3.1.3.11.2 persist:

a) radiation to cease; and

b) removal of the navigation and identification components from the carrier.

3.1.3.11.2 The conditions requiring initiation of monitor action shall be the following:

a) for Facility Performance Category I localizers, a shift of the mean course line from the runway centre line equivalent to more than 10.5 m (35 ft), or the linear equivalent to 0.015 DDM, whichever is less, at the ILS reference datum;

b) for Facility Performance Category II localizers, a shift of the mean course line from the runway centre line equivalent to more than 7.5 m (25 ft) at the ILS reference datum;

c) for Facility Performance Category III localizers, a shift of the mean course line from the runway centre line equivalent to more than 6 m (20 ft) at the ILS reference datum;

d) in the case of localizers in which the basic functions are provided by the use of a single-frequency system, a reduction of power output to a level such that any of the requirements of 3.1.3.3, 3.1.3.4 or 3.1.3.5 are no longer satisfied, or to a level that is less than 50 per cent of the normal level (whichever occurs first);

e) in the case of localizers in which the basic functions are provided by the use of a two-frequency system, a reduction of power output for either carrier to less than 80 per cent of normal, except that a greater reduction to between 80 per cent and 50 per cent of normal may be permitted, provided the localizer continues to meet the requirements of 3.1.3.3, 3.1.3.4 and 3.1.3.5;

Note.— It is important to recognize that a frequency change resulting in a loss of the frequency difference specified in 3.1.3.2.1 may produce a hazardous condition. This problem is of greater operational significance for Facility Performance Categories II and III installations. As necessary, this problem can be dealt with through special monitoring provisions or highly reliable circuitry.

f) change of displacement sensitivity to a value differing by more than 17 per cent from the nominal value for the localizer facility.

Note.— In selecting the power reduction figure to be employed in monitoring referred to in 3.1.3.11.2 e), particular attention is directed to vertical and horizontal lobe structure (vertical lobing due to different antenna heights) of the combined radiation systems when two carriers are employed. Large changes in the power ratio between carriers may result in low clearance areas and false courses in the off-course areas to the limits of the vertical coverage requirements specified in 3.1.3.3.1.

3.1.3.11.2.1 **Recommendation.—** *In the case of localizers in which the basic functions are provided by the use of a two-frequency system, the conditions requiring initiation of monitor action should include the case when the DDM in the required coverage beyond plus or minus 10 degrees from the front course line, except in the back course sector, decreases below 0.155.*

3.1.3.11.3 The total period of radiation, including period(s) of zero radiation, outside the performance limits specified in a), b), c), d), e) and f) of 3.1.3.11.2 shall be as short as practicable, consistent with the need for avoiding interruptions of the navigation service provided by the localizer.

3.1.3.11.3.1 The total period referred to under 3.1.3.11.3 shall not exceed under any circumstances:

10 seconds for Facility Performance Category I localizers;

5 seconds for Facility Performance Category II localizers;

2 seconds for Facility Performance Category III localizers.

Note 1.— The total time periods specified are never-to-be-exceeded limits and are intended to protect aircraft in the final stages of approach against prolonged or repeated periods of localizer guidance outside the monitor limits. For this reason, they include not only the initial period of outside tolerance operation but also the total of any or all periods of outside tolerance radiation including period(s) of zero radiation and time required to remove the navigation and identification components from the carrier, which might occur during action to restore service, for example, in the course of consecutive monitor functioning and consequent changeover(s) to localizer equipment or elements thereof.

Note 2.— From an operational point of view, the intention is that no guidance outside the monitor limits be radiated after the time periods given, and that no further attempts be made to restore service until a period in the order of 20 seconds has elapsed.

3.1.3.11.3.2 **Recommendation.—** *Where practicable, the total period under 3.1.3.11.3.1 should be reduced so as not to exceed two seconds for Facility Performance Category II localizers and one second for Facility Performance Category III localizers.*

3.1.3.11.4 Design and operation of the monitor system shall be consistent with the requirement that navigation guidance and identification will be removed and a warning provided at the designated remote control points in the event of failure of the monitor system itself.

Note.— Guidance material on the design and operation of monitor systems is given in Attachment C, 2.1.7.

3.1.3.12 Integrity and continuity of service levels and requirements

3.1.3.12.1 A localizer shall be assigned a level of integrity and continuity of service as given in 3.1.3.12.2 to 3.1.3.12.5.

Note.— Levels are used to provide the necessary information for the determination of the category of operation and associated minima, which are a function of the Facility Performance Category, the (separate) integrity and continuity of service level, and a number of operational factors (e.g. aircraft and crew qualification, meteorological conditions, and runway features). If a localizer does not meet its required integrity and continuity of service level, some operational use may still be possible, as stated in the Manual of All-Weather Operations *(Doc 9365), Appendix C on ILS facility classification and downgrading. Similarly, if a localizer exceeds the minimum integrity and continuity of service level, more demanding operations may be possible.*

3.1.3.12.2 The localizer level shall be Level 1 if either:

a) the localizer's integrity of service or its continuity of service, or both, are not demonstrated; or

b) the localizer's integrity of service and its continuity of service are both demonstrated, but at least one of them does not meet the requirements of Level 2.

3.1.3.12.2.1 **Recommendation.—** *The probability of not radiating false guidance signals should not be less than* $1 - 1.0 \times 10^{-7}$ *in any one landing for Level 1 localizers.*

3.1.3.12.2.2 **Recommendation.—** *The probability of not losing the radiated guidance signal should exceed $1 - 4 \times 10^{-6}$ in any period of 15 seconds for Level 1 localizers (equivalent to 1 000 hours mean time between outages).*

Note.— A localizer that meets both Recommended Practices 3.1.3.12.2.1 and 3.1.3.12.2.2 also meets Standard 3.1.3.12.3 (Level 2 performance) and is therefore to be identified as Level 2.

3.1.3.12.2.3 **Recommendation.—** *In the event that the integrity value for a Level 1 localizer is not available or cannot be readily calculated, a detailed analysis should be performed to assure proper monitor fail-safe operation.*

3.1.3.12.3 The localizer level shall be Level 2 if:

a) the probability of not radiating false guidance signals is not less than $1 - 1.0 \times 10^{-7}$ in any one landing; and

b) the probability of not losing the radiated guidance is greater than $1 - 4 \times 10^{-6}$ in any period of 15 seconds (equivalent to 1 000 hours mean time between outages).

3.1.3.12.4 The localizer level shall be Level 3 if:

a) the probability of not radiating false guidance signals is not less than $1 - 0.5 \times 10^{-9}$ in any one landing; and

b) the probability of not losing the radiated guidance is greater than $1 - 2 \times 10^{-6}$ in any period of 15 seconds (equivalent to 2 000 hours mean time between outages).

3.1.3.12.5 The localizer level shall be Level 4 if:

a) the probability of not radiating false guidance signals is not less than $1 - 0.5 \times 10^{-9}$ in any one landing; and

b) the probability of not losing the radiated guidance is greater than $1 - 2 \times 10^{-6}$ in any period of 30 seconds (equivalent to 4 000 hours mean time between outages).

Note.— Guidance material on ways to achieve integrity and continuity of service is given in Attachment C, 2.8.

3.1.4 Interference immunity performance for ILS localizer receiving systems

3.1.4.1 The ILS localizer receiving system shall provide adequate immunity to interference from two-signal, third-order intermodulation products caused by VHF FM broadcast signals having levels in accordance with the following:

$$2N_1 + N_2 + 72 \leq 0$$

for VHF FM sound broadcasting signals in the range 107.7 – 108.0 MHz

and

$$2N_1 + N_2 + 3\left(24 - 20\log\frac{\Delta f}{0{,}4}\right) \leq 0$$

for VHF FM sound broadcasting signals below 107.7 MHz,

where the frequencies of the two VHF FM sound broadcasting signals produce, within the receiver, a two-signal, third-order intermodulation product on the desired ILS localizer frequency.

N_1 and N_2 are the levels (dBm) of the two VHF FM sound broadcasting signals at the ILS localizer receiver input. Neither level shall exceed the desensitization criteria set forth in 3.1.4.2.

$\Delta f = 108.1 - f_1$, where f_1 is the frequency of N_1, the VHF FM sound broadcasting signal closer to 108.1 MHz.

3.1.4.2 The ILS localizer receiving system shall not be desensitized in the presence of VHF FM broadcast signals having levels in accordance with the following table:

Frequency (MHz)	*Maximum level of unwanted signal at receiver input (dBm)*
88-102	+15
104	+10
106	+5
107.9	–10

Note 1.— The relationship is linear between adjacent points designated by the above frequencies.

Note 2.— Guidance material on immunity criteria to be used for the performance quoted in 3.1.4.1 and 3.1.4.2 is contained in Attachment C, 2.2.2.

3.1.5 UHF glide path equipment and associated monitor

Note.— θ is used in this paragraph to denote the nominal glide path angle.

3.1.5.1 *General*

3.1.5.1.1 The radiation from the UHF glide path antenna system shall produce a composite field pattern which is amplitude modulated by a 90 Hz and a 150 Hz tone. The pattern shall be arranged to provide a straight line descent path in the vertical plane containing the centre line of the runway, with the 150 Hz tone predominating below the path and the 90 Hz tone predominating above the path to at least an angle equal to 1.75 θ.

3.1.5.1.2 **Recommendation.—** *The ILS glide path angle should be 3 degrees. ILS glide path angles in excess of 3 degrees should not be used except where alternative means of satisfying obstruction clearance requirements are impracticable.*

3.1.5.1.2.1 The glide path angle shall be adjusted and maintained within:

a) 0.075 θ from θ for Facility Performance Categories I and II — ILS glide paths;

b) 0.04 θ from θ for Facility Performance Category III — ILS glide paths.

Note 1.— Guidance material on adjustment and maintenance of glide path angles is given in 2.4 of Attachment C.

Note 2.— Guidance material on ILS glide path curvature, alignment and siting, relevant to the selection of the height of the ILS reference datum is given in 2.4 of Attachment C and Figure C-5.

Note 3.— Guidance material relevant to protecting the ILS glide path course structure is given in 2.1.9 of Attachment C.

3.1.5.1.3 The downward extended straight portion of the ILS glide path shall pass through the ILS reference datum at a height ensuring safe guidance over obstructions and also safe and efficient use of the runway served.

3.1.5.1.4 The height of the ILS reference datum for Facility Performance Categories II and III — ILS shall be 15 m (50 ft). A tolerance of plus 3 m (10 ft) is permitted.

3.1.5.1.5 **Recommendation.—** *The height of the ILS reference datum for Facility Performance Category I — ILS should be 15 m (50 ft). A tolerance of plus 3 m (10 ft) is permitted.*

Note 1.— In arriving at the above height values for the ILS reference datum, a maximum vertical distance of 5.8 m (19 ft) between the path of the aircraft glide path antenna and the path of the lowest part of the wheels at the threshold was assumed. For aircraft exceeding this criterion, appropriate steps may have to be taken either to maintain adequate clearance at threshold or to adjust the permitted operating minima.

Note 2.— Appropriate guidance material is given in 2.4 of Attachment C.

3.1.5.1.6 **Recommendation.—** *The height of the ILS reference datum for Facility Performance Category I — ILS used on short precision approach runway codes 1 and 2 should be 12 m (40 ft). A tolerance of plus 6 m (20 ft) is permitted.*

3.1.5.2 *Radio frequency*

3.1.5.2.1 The glide path equipment shall operate in the band 328.6 MHz to 335.4 MHz. Where a single radio frequency carrier is used, the frequency tolerance shall not exceed 0.005 per cent. Where two carrier glide path systems are used, the frequency tolerance shall not exceed 0.002 per cent and the nominal band occupied by the carriers shall be symmetrical about the assigned frequency. With all tolerances applied, the frequency separation between the carriers shall not be less than 4 kHz nor more than 32 kHz.

3.1.5.2.2 The emission from the glide path equipment shall be horizontally polarized.

3.1.5.2.3 For Facility Performance Category III — ILS glide path equipment, signals emanating from the transmitter shall contain no components which result in apparent glide path fluctuations of more than 0.02 DDM peak to peak in the frequency band 0.01 Hz to 10 Hz.

3.1.5.3 *Coverage*

3.1.5.3.1 The glide path equipment shall provide signals sufficient to allow satisfactory operation of a typical aircraft installation in sectors of 8 degrees in azimuth on each side of the centre line of the ILS glide path, to a distance of at least 18.5 km (10 NM) up to 1.75 θ and down to 0.45 θ above the horizontal or to such lower angle, down to 0.30 θ, as required to safeguard the promulgated glide path intercept procedure.

3.1.5.3.2 In order to provide the coverage for glide path performance specified in 3.1.5.3.1, the minimum field strength within this coverage sector shall be 400 microvolts per metre (minus 95 dBW/m^2). For Facility Performance Category I glide paths, this field strength shall be provided down to a height of 30 m (100 ft) above the horizontal plane containing the threshold. For Facility Performance Categories II and III glide paths, this field strength shall be provided down to a height of 15 m (50 ft) above the horizontal plane containing the threshold.

Note 1.— The requirements in the foregoing paragraphs are based on the assumption that the aircraft is heading directly toward the facility.

Note 2.— Guidance material on significant airborne receiver parameters is given in 2.2 of Attachment C.

Note 3.— Material concerning reduction in coverage outside 8 degrees on each side of the centre line of the ILS glide path appears in 2.4 of Attachment C.

3.1.5.4 *ILS glide path structure*

3.1.5.4.1 For Facility Performance Category I — ILS glide paths, bends in the glide path shall not have amplitudes which exceed the following:

Zone	*Amplitude (DDM) (95% probability)*
Outer limit of coverage to ILS Point "C"	0.035

3.1.5.4.2 For Facility Performance Categories II and III — ILS glide paths, bends in the glide path shall not have amplitudes which exceed the following:

Zone	*Amplitude (DDM) (95% probability)*
Outer limit of coverage to ILS Point "A"	0.035
ILS Point "A" to ILS Point "B"	0.035 at ILS Point "A" decreasing at a linear rate to 0.023 at ILS Point "B"
ILS Point "B" to the ILS reference datum	0.023

Note 1.— The amplitudes referred to in 3.1.5.4.1 and 3.1.5.4.2 are the DDMs due to bends as realized on the mean ILS glide path correctly adjusted.

Note 2.— In regions of the approach where ILS glide path curvature is significant, bend amplitudes are calculated from the mean curved path, and not the downward extended straight line.

Note 3.— Guidance material relevant to the ILS glide path course structure is given in 2.1.4 of Attachment C. Guidance material relevant to protecting the ILS glide path course structure is given in 2.1.9 of Attachment C.

3.1.5.5 *Carrier modulation*

3.1.5.5.1 The nominal depth of modulation of the radio frequency carrier due to each of the 90 Hz and 150 Hz tones shall be 40 per cent along the ILS glide path. The depth of modulation shall not deviate outside the limits of 37.5 per cent to 42.5 per cent.

3.1.5.5.2 The following tolerances shall be applied to the frequencies of the modulating tones:

a) the modulating tones shall be 90 Hz and 150 Hz within 2.5 per cent for Facility Performance Category I — ILS;

b) the modulating tones shall be 90 Hz and 150 Hz within 1.5 per cent for Facility Performance Category II — ILS;

c) the modulating tones shall be 90 Hz and 150 Hz within 1 per cent for Facility Performance Category III — ILS;

d) the total harmonic content of the 90 Hz tone shall not exceed 10 per cent: additionally, for Facility Performance Category III equipment, the second harmonic of the 90 Hz tone shall not exceed 5 per cent;

e) the total harmonic content of the 150 Hz tone shall not exceed 10 per cent.

3.1.5.5.2.1 **Recommendation.—** *For Facility Performance Category I — ILS, the modulating tones should be 90 Hz and 150 Hz within plus or minus 1.5 per cent where practicable.*

3.1.5.5.2.2 For Facility Performance Category III glide path equipment, the depth of amplitude modulation of the radio frequency carrier at the power supply frequency or harmonics, or at other noise frequencies, shall not exceed 1 per cent.

3.1.5.5.3 The modulation shall be phase-locked so that within the ILS half glide path sector, the demodulated 90 Hz and 150 Hz wave forms pass through zero in the same direction within:

a) for Facility Performance Categories I and II — ILS glide paths: 20 degrees;

b) for Facility Performance Category III — ILS glide paths: 10 degrees,

of phase relative to the 150 Hz component, every half cycle of the combined 90 Hz and 150 Hz wave form.

Note 1.— The definition of phase relationship in this manner is not intended to imply a requirement for measurement of phase within the ILS half glide path sector.

Note 2.— Guidance material relating to such measures is given at Figure C-6 of Attachment C.

3.1.5.5.3.1 With two-frequency glide path systems, 3.1.5.5.3 shall apply to each carrier. In addition, the 90 Hz modulating tone of one carrier shall be phase-locked to the 90 Hz modulating tone of the other carrier so that the demodulated wave forms pass through zero in the same direction within:

a) for Facility Performance Categories I and II — ILS glide paths: 20 degrees;

b) for Facility Performance Category III — ILS glide paths: 10 degrees,

of phase relative to 90 Hz. Similarly, the 150 Hz tones of the two carriers shall be phase-locked so that the demodulated wave forms pass through zero in the same direction, within:

1) for Facility Performance Categories I and II — ILS glide paths: 20 degrees;

2) for Facility Performance Category III — ILS glide paths: 10 degrees,

of phase relative to 150 Hz.

3.1.5.5.3.2 Alternative two-frequency glide path systems that employ audio phasing different from the normal in-phase condition described in 3.1.5.5.3.1 shall be permitted. In these alternative systems, the 90 Hz to 90 Hz phasing and the 150 Hz to 150 Hz phasing shall be adjusted to their nominal values to within limits equivalent to those stated in 3.1.5.5.3.1.

Note.— This is to ensure correct airborne receiver operation within the glide path sector where the two carrier signal strengths are approximately equal.

3.1.5.5.4 **Recommendation.—** *Undesired frequency and phase modulation on ILS glide path radio frequency carriers that can affect the displayed DDM values in glide path receivers should be minimized to the extent practical.*

Note.— Relevant guidance material is given in 2.15 of Attachment C.

3.1.5.6 *Displacement sensitivity*

3.1.5.6.1 For Facility Performance Category I — ILS glide paths, the nominal angular displacement sensitivity shall correspond to a DDM of 0.0875 at angular displacements above and below the glide path between 0.07 θ and 0.14 θ.

Note.— The above is not intended to preclude glide path systems which inherently have asymmetrical upper and lower sectors.

3.1.5.6.2 **Recommendation.—** *For Facility Performance Category I — ILS glide paths, the nominal angular displacement sensitivity should correspond to a DDM of 0.0875 at an angular displacement below the glide path of 0.12* θ *with a tolerance of plus or minus 0.02* θ*. The upper and lower sectors should be as symmetrical as practicable within the limits specified in 3.1.5.6.1.*

3.1.5.6.3 For Facility Performance Category II — ILS glide paths, the angular displacement sensitivity shall be as symmetrical as practicable. The nominal angular displacement sensitivity shall correspond to a DDM of 0.0875 at an angular displacement of:

a) 0.12 θ below path with a tolerance of plus or minus 0.02 θ;

b) 0.12 θ above path with a tolerance of plus 0.02 θ and minus 0.05 θ

3.1.5.6.4 For Facility Performance Category III — ILS glide paths, the nominal angular displacement sensitivity shall correspond to a DDM of 0.0875 at angular displacements above and below the glide path of 0.12 θ with a tolerance of plus or minus 0.02 θ.

3.1.5.6.5 The DDM below the ILS glide path shall increase smoothly for decreasing angle until a value of 0.22 DDM is reached. This value shall be achieved at an angle not less than 0.30 θ above the horizontal. However, if it is achieved at an angle above 0.45 θ, the DDM value shall not be less than 0.22 at least down to 0.45 θ or to such lower angle, down to 0.30 θ, as required to safeguard the promulgated glide path intercept procedure.

Note.— The limits of glide path equipment adjustment are pictorially represented in Figure C-11 of Attachment C.

3.1.5.6.6 For Facility Performance Category I — ILS glide paths, the angular displacement sensitivity shall be adjusted and maintained within plus or minus 25 per cent of the nominal value selected.

3.1.5.6.7 For Facility Performance Category II — ILS glide paths, the angular displacement sensitivity shall be adjusted and maintained within plus or minus 20 per cent of the nominal value selected.

3.1.5.6.8 For Facility Performance Category III — ILS glide paths, the angular displacement sensitivity shall be adjusted and maintained within plus or minus 15 per cent of the nominal value selected.

3.1.5.7 *Monitoring*

3.1.5.7.1 The automatic monitor system shall provide a warning to the designated control points and cause radiation to cease within the periods specified in 3.1.5.7.3.1 if any of the following conditions persist:

a) shift of the mean ILS glide path angle equivalent to more than minus 0.075 θ to plus 0.10 θ from θ;

b) in the case of ILS glide paths in which the basic functions are provided by the use of a single-frequency system, a reduction of power output to less than 50 per cent of normal, provided the glide path continues to meet the requirements of 3.1.5.3, 3.1.5.4 and 3.1.5.5;

c) in the case of ILS glide paths in which the basic functions are provided by the use of two-frequency systems, a reduction of power output for either carrier to less than 80 per cent of normal, except that a greater reduction to between 80 per cent and 50 per cent of normal may be permitted, provided the glide path continues to meet the requirements of 3.1.5.3, 3.1.5.4 and 3.1.5.5;

Note.— It is important to recognize that a frequency change resulting in a loss of the frequency difference specified in 3.1.5.2.1 may produce a hazardous condition. This problem is of greater operational significance for Facility Performance Categories II and III installations. As necessary, this problem can be dealt with through special monitoring provisions or highly reliable circuitry.

d) for Facility Performance Category I — ILS glide paths, a change of the angle between the glide path and the line below the glide path (150 Hz predominating) at which a DDM of 0.0875 is realized by more than the greater of:

i) plus or minus 0.0375 θ; or

ii) an angle equivalent to a change of displacement sensitivity to a value differing by 25 per cent from the nominal value;

e) for Facility Performance Categories II and III — ILS glide paths, a change of displacement sensitivity to a value differing by more than 25 per cent from the nominal value;

f) lowering of the line beneath the ILS glide path at which a DDM of 0.0875 is realized to less than 0.7475 θ from horizontal;

g) a reduction of DDM to less than 0.175 within the specified coverage below the glide path sector.

Note 1.— The value of 0.7475 θ *from horizontal is intended to ensure adequate obstacle clearance. This value was derived from other parameters of the glide path and monitor specification. Since the measuring accuracy to four significant figures is not intended, the value of 0.75* θ *may be used as a monitor limit for this purpose. Guidance on obstacle clearance criteria is given in the* Procedures for Air Navigation Services — Aircraft Operations (PANS-OPS) *(Doc 8168).*

Note 2.— Subparagraphs f) and g) are not intended to establish a requirement for a separate monitor to protect against deviation of the lower limits of the half-sector below 0.7475 θ *from horizontal.*

Note 3.— At glide path facilities where the selected nominal angular displacement sensitivity corresponds to an angle below the ILS glide path which is close to or at the maximum limits specified in 3.1.5.6, it may be necessary to adjust the monitor operating limits to protect against sector deviations below 0.7475 θ from horizontal.

Note 4.— Guidance material relating to the condition described in g) appears in Attachment C, 2.4.11.

3.1.5.7.2 **Recommendation.—** *Monitoring of the ILS glide path characteristics to smaller tolerances should be arranged in those cases where operational penalties would otherwise exist.*

3.1.5.7.3 The total period of radiation, including period(s) of zero radiation, outside the performance limits specified in 3.1.5.7.1 shall be as short as practicable, consistent with the need for avoiding interruptions of the navigation service provided by the ILS glide path.

3.1.5.7.3.1 The total period referred to under 3.1.5.7.3 shall not exceed under any circumstances:

6 seconds for Facility Performance Category I — ILS glide paths;

2 seconds for Facility Performance Categories II and III — ILS glide paths.

Note 1.— The total time periods specified are never-to-be-exceeded limits and are intended to protect aircraft in the final stages of approach against prolonged or repeated periods of ILS glide path guidance outside the monitor limits. For this reason, they include not only the initial period of outside tolerance operation but also the total of any or all periods of outside tolerance radiation, including periods of zero radiation, which might occur during action to restore service, for example, in the course of consecutive monitor functioning and consequent changeovers to glide path equipments or elements thereof.

Note 2.— From an operational point of view, the intention is that no guidance outside the monitor limits be radiated after the time periods given, and that no further attempts be made to restore service until a period in the order of 20 seconds has elapsed.

3.1.5.7.3.2 **Recommendation.—** *Where practicable, the total period specified under 3.1.5.7.3.1 for Facility Performance Categories II and III — ILS glide paths should not exceed 1 second.*

3.1.5.7.4 Design and operation of the monitor system shall be consistent with the requirement that radiation shall cease and a warning shall be provided at the designated remote control points in the event of failure of the monitor system itself.

Note.— Guidance material on the design and operation of monitor systems is given in 2.1.7 of Attachment C.

3.1.5.8 Integrity and continuity of service levels and requirements

3.1.5.8.1 A glide path shall be assigned a level of integrity and continuity of service as given in 3.1.5.8.2 to 3.1.5.8.4.

Note.— Levels are used to provide the necessary information for the determination of the category of operation and associated minima, which are a function of the Facility Performance Category, the (separate) integrity and continuity of service level, and a number of operational factors (e.g. aircraft and crew qualification, meteorological conditions, and runway features). If a glide path does not meet its required integrity and continuity of service level, some operational use may still be possible, as stated in the Manual of All-Weather Operations *(Doc 9365), Appendix C on ILS facility classification and downgrading. Similarly, if a glide path exceeds the minimum integrity and continuity of service level, more demanding operations may be possible.*

3.1.5.8.2 The glide path level shall be Level 1 if either:

a) the glide path's integrity of service or its continuity of service, or both, are not demonstrated; or

b) the glide path's integrity of service and its continuity of service are both demonstrated, but at least one of them does not meet the requirements of Level 2.

3.1.5.8.2.1 **Recommendation.—** *The probability of not radiating false guidance signals should not be less than* $1 - 1.0 \times 10^{-7}$ *in any one landing for Level 1 glide paths.*

3.1.5.8.2.2 **Recommendation.—** *The probability of not losing the radiated guidance signal should exceed* $1 - 4 \times 10^{-6}$ *in any period of 15 seconds for Level 1 glide paths (equivalent to 1 000 hours mean time between outages).*

Note.— A glide path that meets both Recommended Practices 3.1.5.8.2.1 and 3.1.5.8.2.2 also meets Standard 3.1.5.8.3 (Level 2 performance) and is therefore to be identified as Level 2.

3.1.5.8.2.3 **Recommendation**.— *In the event that the integrity value for a Level 1 glide path is not available or cannot be readily calculated, a detailed analysis should be performed to assure proper monitor fail-safe operation.*

3.1.5.8.3 The glide path level shall be Level 2 if:

a) the probability of not radiating false guidance signals is not less than $1 - 1.0 \times 10^{-7}$ in any one landing; and

b) the probability of not losing the radiated guidance is greater $1 - 4 \times 10^{-6}$ in any period of 15 seconds (equivalent to 1 000 hours mean time between outages).

3.1.5.8.4 The glide path level shall be Level 3 or 4 if:

a) the probability of not radiating false guidance signals is not less than $1 - 0.5 \times 10^{-9}$ in any one landing; and

b) the probability of not losing the radiated guidance is greater than $1 - 2 \times 10^{-6}$ in any period of 15 seconds (equivalent to 2 000 hours mean time between outages).

Note 1.— The requirements for glide path Level 3 and Level 4 are the same. The declaration of the glide path integrity and continuity of service levels should match the declaration of the localizer (i.e. the glide path is declared as Level 4 if the localizer is meeting Level 4).

Note 2.— Guidance material on ways to achieve integrity and continuity of service is given in 2.8 of Attachment C.

3.1.6 Localizer and glide path frequency pairing

3.1.6.1 The pairing of the runway localizer and glide path transmitter frequencies of an instrument landing system shall be taken from the following list in accordance with the provisions of Volume V, Chapter 4, 4.2:

Localizer (MHz)	*Glide path (MHz)*	*Localizer (MHz)*	*Glide path (MHz)*
108.1	334.7	110.1	334.4
108.15	334.55	110.15	334.25
108.3	334.1	110.3	335.0
108.35	333.95	110.35	334.85
108.5	329.9	110.5	329.6
108.55	329.75	110.55	329.45
108.7	330.5	110.7	330.2
108.75	330.35	110.75	330.05
108.9	329.3	110.9	330.8
108.95	329.15	110.95	330.65
109.1	331.4	111.1	331.7
109.15	331.25	111.15	331.55
109.3	332.0	111.3	332.3
109.35	331.85	111.35	332.15
109.5	332.6	111.5	332.9
109.55	332.45	111.55	332.75
109.7	333.2	111.7	333.5
109.75	333.05	111.75	333.35
109.9	333.8	111.9	331.1
109.95	333.65	111.95	330.95

3.1.7 VHF marker beacons

Note.— Requirements relating to marker beacons apply only when one or more marker beacons are installed.

3.1.7.1 *General*

a) There shall be two marker beacons in each installation except where, in the opinion of the Competent Authority, a single marker beacon is considered to be sufficient. A third marker beacon may be added whenever, in the opinion of the Competent Authority, an additional beacon is required because of operational procedures at a particular site.

b) A marker beacon shall conform to the requirements prescribed in 3.1.7. When the installation comprises only two marker beacons, the requirements applicable to the middle marker and to the outer marker shall be complied with. When the installation comprises only one marker beacon, the requirements applicable to either the middle or the outer marker shall be complied with. If marker beacons are replaced by DME, the requirements of 3.1.7.6.5 shall apply.

c) The marker beacons shall produce radiation patterns to indicate predetermined distance from the threshold along the ILS glide path.

3.1.7.1.1 When a marker beacon is used in conjunction with the back course of a localizer, it shall conform with the marker beacon characteristics specified in 3.1.7.

3.1.7.1.2 Identification signals of marker beacons used in conjunction with the back course of a localizer shall be clearly distinguishable from the inner, middle and outer marker beacon identifications, as prescribed in 3.1.7.5.1.

3.1.7.2 *Radio frequency*

3.1.7.2.1 The marker beacons shall operate at 75 MHz with a frequency tolerance of plus or minus 0.005 per cent and shall utilize horizontal polarization.

3.1.7.3 *Coverage*

3.1.7.3.1 The marker beacon system shall be adjusted to provide coverage over the following distances, measured on the ILS glide path and localizer course line:

a) *inner marker:* 150 m plus or minus 50 m (500 ft plus or minus 160 ft);

b) *middle marker:* 300 m plus or minus 100 m (1 000 ft plus or minus 325 ft);

c) *outer marker:* 600 m plus or minus 200 m (2 000 ft plus or minus 650 ft).

3.1.7.3.2 The field strength at the limits of coverage specified in 3.1.7.3.1 shall be 1.5 millivolts per metre (minus 82 dBW/m^2). In addition, the field strength within the coverage area shall rise to at least 3.0 millivolts per metre (minus 76 dBW/m^2).

Note 1.— In the design of the ground antenna, it is advisable to ensure that an adequate rate of change of field strength is provided at the edges of coverage. It is also advisable to ensure that aircraft within the localizer course sector will receive visual indication.

Note 2.— Satisfactory operation of a typical airborne marker installation will be obtained if the sensitivity is so adjusted that visual indication will be obtained when the field strength is 1.5 millivolts per metre (minus 82 dBW/m^2).

3.1.7.4 *Modulation*

3.1.7.4.1 The modulation frequencies shall be as follows:

a) *inner marker:* 3 000 Hz;

b) *middle marker:* 1 300 Hz;

c) *outer marker:* 400 Hz.

The frequency tolerance of the above frequencies shall be plus or minus 2.5 per cent, and the total harmonic content of each of the frequencies shall not exceed 15 per cent.

3.1.7.4.2 The depth of modulation of the markers shall be 95 per cent plus or minus 4 per cent.

3.1.7.5 *Identification*

3.1.7.5.1 The carrier energy shall not be interrupted. The audio frequency modulation shall be keyed as follows:

a) *inner marker:* 6 dots per second continuously;

b) *middle marker:* a continuous series of alternate dots and dashes, the dashes keyed at the rate of 2 dashes per second, and the dots at the rate of 6 dots per second;

c) *outer marker:* 2 dashes per second continuously.

These keying rates shall be maintained to within plus or minus 15 per cent.

3.1.7.6 *Siting*

3.1.7.6.1 The inner marker shall be located so as to indicate in low visibility conditions the imminence of arrival at the runway threshold.

3.1.7.6.1.1 **Recommendation.—** *If the radiation pattern is vertical, the inner marker should be located between 75 m (250 ft) and 450 m (1 500 ft) from the threshold and at not more than 30 m (100 ft) from the extended centre line of the runway.*

Note 1.— It is intended that the inner marker pattern should intercept the downward extended straight portion of the nominal ILS glide path at the lowest decision height applicable in Category II operations.

Note 2.— Care must be exercised in siting the inner marker to avoid interference between the inner and middle markers. Details regarding the siting of inner markers are contained in Attachment C, 2.10.

3.1.7.6.1.2 **Recommendation.—** *If the radiation pattern is other than vertical, the equipment should be located so as to produce a field within the course sector and ILS glide path sector that is substantially similar to that produced by an antenna radiating a vertical pattern and located as prescribed in 3.1.7.6.1.1.*

3.1.7.6.2 The middle marker shall be located so as to indicate the imminence, in low visibility conditions, of visual approach guidance.

3.1.7.6.2.1 **Recommendation.—** *If the radiation pattern is vertical, the middle marker should be located 1 050 m (3 500 ft) plus or minus 150 m (500 ft), from the landing threshold at the approach end of the runway and at not more than 75 m (250 ft) from the extended centre line of the runway.*

Note.— See Attachment C, 2.10, regarding the siting of inner and middle marker beacons.

3.1.7.6.2.2 **Recommendation.—** *If the radiation pattern is other than vertical, the equipment should be located so as to produce a field within the course sector and ILS glide path sector that is substantially similar to that produced by an antenna radiating a vertical pattern and located as prescribed in 3.1.7.6.2.1.*

3.1.7.6.3 The outer marker shall be located so as to provide height, distance and equipment functioning checks to aircraft on intermediate and final approach.

3.1.7.6.3.1 **Recommendation.—** *The outer marker should be located 7.2 km (3.9 NM) from the threshold except that, where for topographical or operational reasons this distance is not practicable, the outer marker may be located between 6.5 and 11.1 km (3.5 and 6 NM) from the threshold.*

3.1.7.6.4 **Recommendation.—** *If the radiation pattern is vertical, the outer marker should be not more than 75 m (250 ft) from the extended centre line of the runway. If the radiation pattern is other than vertical, the equipment should be located so as to produce a field within the course sector and ILS glide path sector that is substantially similar to that produced by an antenna radiating a vertical pattern.*

3.1.7.6.5 The positions of marker beacons, or where applicable, the equivalent distance(s) indicated by the DME when used as an alternative to part or all of the marker beacon component of the ILS, shall be published in accordance with the provisions of Annex 15.

3.1.7.6.5.1 When so used, the DME shall provide distance information operationally equivalent to that furnished by marker beacon(s).

3.1.7.6.5.2 When used as an alternative for the middle marker, the DME shall be frequency paired with the ILS localizer and sited so as to minimize the error in distance information.

3.1.7.6.5.3 The DME in 3.1.7.6.5 shall conform to the specification in 3.5.

3.1.7.7 *Monitoring*

3.1.7.7.1 Suitable equipment shall provide signals for the operation of an automatic monitor. The monitor shall transmit a warning to a control point if either of the following conditions arise:

a) failure of the modulation or keying;

b) reduction of power output to less than 50 per cent of normal.

3.1.7.7.2 **Recommendation.—** *For each marker beacon, suitable monitoring equipment should be provided which will indicate at the appropriate location a decrease of the modulation depth below 50 per cent.*

3.2 Specification for precision approach radar system

Note.— Slant distances are used throughout this specification.

3.2.1 The precision approach radar system shall comprise the following elements:

3.2.1.1 The precision approach radar element (PAR).

3.2.1.2 The surveillance radar element (SRE).

3.2.2 When the PAR only is used, the installation shall be identified by the term PAR or precision approach radar and not by the term “precision approach radar system”.

Note.— Provisions for the recording and retention of radar data are contained in Annex 11, Chapter 6.

3.2.3 The precision approach radar element (PAR)

3.2.3.1 *Coverage*

3.2.3.1.1 The PAR shall be capable of detecting and indicating the position of an aircraft of 15 m^2 echoing area or larger, which is within a space bounded by a 20-degree azimuth sector and a 7-degree elevation sector, to a distance of at least 16.7 km (9 NM) from its respective antenna.

Note.— For guidance in determining the significance of the echoing areas of aircraft, the following table is included:

private flyer (single-engined): 5 to 10 m^2;

small twin-engined aircraft: from 15 m^2;

medium twin-engined aircraft: from 25 m^2;

four-engined aircraft: from 50 to 100 m^2.

3.2.3.2 *Siting*

3.2.3.2.1 The PAR shall be sited and adjusted so that it gives complete coverage of a sector with its apex at a point 150 m (500 ft) from the touchdown in the direction of the stop end of the runway and extending plus or minus 5 degrees about the runway centre line in azimuth and from minus 1 degree to plus 6 degrees in elevation.

Note 1.— Paragraph 3.2.3.2.1 can be met by siting the equipment with a set-back from the touchdown, in the direction of the stop end of the runway, of 915 m (3 000 ft) or more, for an offset of 120 m (400 ft) from the runway centre line, or of 1 200 m (4 000 ft) or more, for an offset of 185 m (600 ft) when the equipment is aligned to scan plus or minus 10 degrees about the centre line of the runway. Alternatively, if the equipment is aligned to scan 15 degrees to one side and 5 degrees to the other side of the centre line of the runway, then the minimum set-back can be reduced to 685 m (2 250 ft) and 915 m (3 000 ft) for offsets of 120 m (400 ft) and 185 m (600 ft) respectively.

Note 2.— Diagrams illustrating the siting of PAR are given in Attachment C (Figures C-14 to C-17 inclusive).

3.2.3.3 *Accuracy*

3.2.3.3.1 *Azimuth accuracy.* Azimuth information shall be displayed in such a manner that left-right deviation from the on-course line shall be easily observable. The maximum permissible error with respect to the deviation from the on-course line shall be either 0.6 per cent of the distance from the PAR antenna plus 10 per cent of the deviation from the on-course line or 9 m (30 ft), whichever is greater. The equipment shall be so sited that the error at the touchdown shall not exceed 9 m (30 ft). The equipment shall be so aligned and adjusted that the displayed error at the touchdown shall be a minimum and shall not exceed 0.3 per cent of the distance from the PAR antenna or 4.5 m (15 ft), whichever is greater. It shall be possible to resolve the positions of two aircraft which are at 1.2 degrees in azimuth of one another.

3.2.3.3.2 *Elevation accuracy.* Elevation information shall be displayed in such a manner that up-down deviation from the descent path for which the equipment is set shall be easily observable. The maximum permissible error with respect to the deviation from the on-course line shall be 0.4 per cent of the distance from the PAR antenna plus 10 per cent of the actual linear displacement from the chosen descent path or 6 m (20 ft), whichever is greater. The equipment shall be so sited that the error at the touchdown shall not exceed 6 m (20 ft). The equipment shall be so aligned and adjusted that the displayed error at the touchdown shall be a minimum and shall not exceed 0.2 per cent of the distance from the PAR antenna or 3 m (10 ft), whichever is greater. It shall be possible to resolve the positions of two aircraft that are at 0.6 degree in elevation of one another.

3.2.3.3.3 *Distance accuracy.* The error in indication of the distance from the touchdown shall not exceed 30 m (100 ft) plus 3 per cent of the distance from the touchdown. It shall be possible to resolve the positions of two aircraft which are at 120 m (400 ft) of one another on the same azimuth.

3.2.3.4 Information shall be made available to permit the position of the controlled aircraft to be established with respect to other aircraft and obstructions. Indications shall also permit appreciation of ground speed and rate of departure from or approach to the desired flight path.

3.2.3.5 Information shall be completely renewed at least once every second.

3.2.4 The surveillance radar element (SRE)

3.2.4.1 A surveillance radar used as the SRE of a precision approach radar system shall satisfy at least the following broad performance requirements.

3.2.4.2 *Coverage*

3.2.4.2.1 The SRE shall be capable of detecting aircraft of 15 m^2 echoing area and larger, which are in line of sight of the antenna within a volume described as follows:

The rotation through 360 degrees about the antenna of a vertical plane surface bounded by a line at an angle of 1.5 degrees above the horizontal plane of the antenna, extending from the antenna to 37 km (20 NM); by a vertical line at 37 km (20 NM) from the intersection with the 1.5-degree line up to 2 400 m (8 000 ft) above the level of the antenna; by a horizontal line at 2 400 m (8 000 ft) from 37 km (20 NM) back towards the antenna to the intersection with a line from the antenna at 20 degrees above the horizontal plane of the antenna, and by a 20-degree line from the intersection with the 2 400 m (8 000 ft) line to the antenna.

3.2.4.2.2 **Recommendation.—** *Efforts should be made in development to increase the coverage on an aircraft of 15 m^2 echoing area to at least the volume obtained by amending 3.2.4.2.1 with the following substitutions:*

— for *1.5 degrees*, read *0.5 degree*;

— for *37 km (20 NM)*, read *46.3 km (25 NM)*;

— for *2 400 m (8 000 ft)*, read *3 000 m (10 000 ft)*;

— for *20 degrees*, read *30 degrees*.

Note.— A diagram illustrating the vertical coverage of SRE is given in Attachment C (Figure C-18).

3.2.4.3 *Accuracy*

3.2.4.3.1 *Azimuth accuracy.* The indication of position in azimuth shall be within plus or minus 2 degrees of the true position. It shall be possible to resolve the positions of two aircraft which are at 4 degrees of azimuth of one another.

3.2.4.3.2 *Distance accuracy.* The error in distance indication shall not exceed 5 per cent of true distance or 150 m (500 ft), whichever is the greater. It shall be possible to resolve the positions of two aircraft that are separated by a distance of 1 per cent of the true distance from the point of observation or 230 m (750 ft), whichever is the greater.

3.2.4.3.2.1 **Recommendation.—** *The error in distance indication should not exceed 3 per cent of the true distance or 150 m (500 ft), whichever is the greater.*

3.2.4.4 The equipment shall be capable of completely renewing the information concerning the distance and azimuth of any aircraft within the coverage of the equipment at least once every 4 seconds.

3.2.4.5 **Recommendation.—** *Efforts should be made to reduce, as far as possible, the disturbance caused by ground echoes or echoes from clouds and precipitation.*

3.3 Specification for VHF omnidirectional radio range (VOR)

3.3.1 General

3.3.1.1 The VOR shall be constructed and adjusted so that similar instrumental indications in aircraft represent equal clockwise angular deviations (bearings), degree for degree from magnetic North as measured from the location of the VOR.

3.3.1.2 The VOR shall radiate a radio frequency carrier with which are associated two separate 30 Hz modulations. One of these modulations shall be such that its phase is independent of the azimuth of the point of observation (reference phase). The other modulation (variable phase) shall be such that its phase at the point of observation differs from that of the reference phase by an angle equal to the bearing of the point of observation with respect to the VOR.

3.3.1.3 The reference and variable phase modulations shall be in phase along the reference magnetic meridian through the station.

Note.— The reference and variable phase modulations are in phase when the maximum value of the sum of the radio frequency carrier and the sideband energy due to the variable phase modulation occurs at the same time as the highest instantaneous frequency of the reference phase modulation.

3.3.2 Radio frequency

3.3.2.1 The VOR shall operate in the band 111.975 MHz to 117.975 MHz except that frequencies in the band 108 MHz to 111.975 MHz may be used when, in accordance with the provisions of Volume V, Chapter 4, 4.2.1 and 4.2.3.1, the use of such frequencies is acceptable. The highest assignable frequency shall be 117.950 MHz. The channel separation shall be in increments of 50 kHz referred to the highest assignable frequency. In areas where 100 kHz channel spacing is in general use, the frequency tolerance of the radio frequency carrier shall be plus or minus 0.005 per cent.

3.3.2.2 The frequency tolerance of the radio frequency carrier of all new installations implemented after 23 May 1974 in areas where 50 kHz channel spacing is in use shall be plus or minus 0.002 per cent.

3.3.2.3 In areas where new VOR installations are implemented and are assigned frequencies spaced at 50 kHz from existing VORs in the same area, priority shall be given to ensuring that the frequency tolerance of the radio frequency carrier of the existing VORs is reduced to plus or minus 0.002 per cent.

3.3.3 Polarization and pattern accuracy

3.3.3.1 The emission from the VOR shall be horizontally polarized. The vertically polarized component of the radiation shall be as small as possible.

Note.— It is not possible at present to state quantitatively the maximum permissible magnitude of the vertically polarized component of the radiation from the VOR. (Information is provided in the Manual on Testing of Radio Navigation Aids *(Doc 8071) as to flight checks that can be carried out to determine the effects of vertical polarization on the bearing accuracy.)*

3.3.3.2 The ground station contribution to the error in the bearing information conveyed by the horizontally polarized radiation from the VOR for all elevation angles between 0 and 40 degrees, measured from the centre of the VOR antenna system, shall be within plus or minus 2 degrees.

3.3.4 Coverage

3.3.4.1 The VOR shall provide signals such as to permit satisfactory operation of a typical aircraft installation at the levels and distances required for operational reasons, and up to an elevation angle of 40 degrees.

3.3.4.2 **Recommendation.—** *The field strength or power density in space of VOR signals required to permit satisfactory operation of a typical aircraft installation at the minimum service level at the maximum specified service radius should be 90 microvolts per metre or minus 107 dBW/m^2.*

Note.— Typical equivalent isotropically radiated powers (EIRPs) to achieve specified ranges are contained in 3.1 of Attachment C. The definition of EIRP is contained in 3.5.1.

3.3.5 Modulations of navigation signals

3.3.5.1 The radio frequency carrier as observed at any point in space shall be amplitude modulated by two signals as follows:

a) a subcarrier of 9 960 Hz of constant amplitude, frequency modulated at 30 Hz:

   1) for the conventional VOR, the 30 Hz component of this FM subcarrier is fixed without respect to azimuth and is termed the "reference phase" and shall have a deviation ratio of 16 plus or minus 1 (i.e. 15 to 17);

   2) for the Doppler VOR, the phase of the 30 Hz component varies with azimuth and is termed the "variable phase" and shall have a deviation ratio of 16 plus or minus 1 (i.e. 15 to 17) when observed at any angle of elevation up to 5 degrees, with a minimum deviation ratio of 11 when observed at any angle of elevation above 5 degrees and up to 40 degrees;

b) a 30 Hz amplitude modulation component:

   1) for the conventional VOR, this component results from a rotating field pattern, the phase of which varies with azimuth, and is termed the "variable phase";

   2) for the Doppler VOR, this component, of constant phase with relation to azimuth and constant amplitude, is radiated omnidirectionally and is termed the "reference phase".

3.3.5.2 The nominal depth of modulation of the radio frequency carrier due to the 30 Hz signal or the subcarrier of 9 960 Hz shall be within the limits of 28 per cent and 32 per cent.

Note.— This requirement applies to the transmitted signal observed in the absence of multipath.

3.3.5.3 The depth of modulation of the radio frequency carrier due to the 30 Hz signal, as observed at any angle of elevation up to 5 degrees, shall be within the limits of 25 to 35 per cent. The depth of modulation of the radio frequency carrier due to the 9 960 Hz signal, as observed at any angle of elevation up to 5 degrees, shall be within the limits of 20 to 55 per cent on facilities without voice modulation, and within the limits of 20 to 35 per cent on facilities with voice modulation.

Note.— When modulation is measured during flight testing under strong dynamic multipath conditions, variations in the received modulation percentages are to be expected. Short-term variations beyond these values may be acceptable. The Manual on Testing of Radio Navigation Aids *(Doc 8071) contains additional information on the application of airborne modulation tolerances.*

3.3.5.4 The variable and reference phase modulation frequencies shall be 30 Hz within plus or minus 1 per cent.

3.3.5.5 The subcarrier modulation mid-frequency shall be 9 960 Hz within plus or minus 1 per cent.

3.3.5.6

a) For the conventional VOR, the percentage of amplitude modulation of the 9 960 Hz subcarrier shall not exceed 5 per cent.

b) For the Doppler VOR, the percentage of amplitude modulation of the 9 960 Hz subcarrier shall not exceed 40 per cent when measured at a point at least 300 m (1 000 ft) from the VOR.

3.3.5.7 Where 50 kHz VOR channel spacing is implemented, the sideband level of the harmonics of the 9 960 Hz component in the radiated signal shall not exceed the following levels referred to the level of the 9 960 Hz sideband:

Subcarrier	*Level*
9 960 Hz	0 dB reference
2nd harmonic	–30 dB
3rd harmonic	–50 dB
4th harmonic and above	–60 dB

3.3.6 Voice and identification

3.3.6.1 If the VOR provides a simultaneous communication channel ground-to-air, it shall be on the same radio frequency carrier as used for the navigational function. The radiation on this channel shall be horizontally polarized.

3.3.6.2 The peak modulation depth of the carrier on the communication channel shall not be greater than 30 per cent.

3.3.6.3 The audio frequency characteristics of the speech channel shall be within 3 dB relative to the level at 1 000 Hz over the range 300 Hz to 3 000 Hz.

3.3.6.4 The VOR shall provide for the simultaneous transmission of a signal of identification on the same radio frequency carrier as that used for the navigational function. The identification signal radiation shall be horizontally polarized.

3.3.6.5 The identification signal shall employ the International Morse Code and consist of two or three letters. It shall be sent at a speed corresponding to approximately 7 words per minute. The signal shall be repeated at least once every 30 seconds and the modulation tone shall be 1 020 Hz within plus or minus 50 Hz.

3.3.6.5.1 **Recommendation.—** *The identification signal should be transmitted at least three times each 30 seconds, spaced equally within that time period. One of these identification signals may take the form of a voice identification.*

Note.— Where a VOR and DME are associated in accordance with 3.5.2.5, the identification provisions of 3.5.3.6.4 influence the VOR identification.

3.3.6.6 The depth to which the radio frequency carrier is modulated by the code identification signal shall be close to, but not in excess of 10 per cent except that, where a communication channel is not provided, it shall be permissible to increase the modulation by the code identification signal to a value not exceeding 20 per cent.

3.3.6.6.1 **Recommendation.—** *If the VOR provides a simultaneous communication channel ground-to-air, the modulation depth of the code identification signal should be 5 plus or minus 1 per cent in order to provide a satisfactory voice quality.*

3.3.6.7 The transmission of speech shall not interfere in any way with the basic navigational function. When speech is being radiated, the code identification shall not be suppressed.

3.3.6.8 The VOR receiving function shall permit positive identification of the wanted signal under the signal conditions encountered within the specified coverage limits, and with the modulation parameters specified at 3.3.6.5, 3.3.6.6 and 3.3.6.7.

3.3.7 Monitoring

3.3.7.1 Suitable equipment located in the radiation field shall provide signals for the operation of an automatic monitor. The monitor shall transmit a warning to a control point, and either remove the identification and navigation components from the carrier or cause radiation to cease if any one or a combination of the following deviations from established conditions arises:

a) a change in excess of 1 degree at the monitor site of the bearing information transmitted by the VOR;

b) a reduction of 15 per cent in the modulation components of the radio frequency signals voltage level at the monitor of either the subcarrier, or 30 Hz amplitude modulation signals, or both.

3.3.7.2 Failure of the monitor itself shall transmit a warning to a control point and either:

a) remove the identification and navigation components from the carrier; or

b) cause radiation to cease.

Note.— Guidance material on VOR appears in Attachment C, 3, and Attachment E.

3.3.8 Interference immunity performance for VOR receiving systems

3.3.8.1 The VOR receiving system shall provide adequate immunity to interference from two signal, third-order intermodulation products caused by VHF FM broadcast signals having levels in accordance with the following:

$$2N_1 + N_2 + 72 \leq 0$$

for VHF FM sound broadcasting signals in the range 107.7 – 108.0 MHz

and

$$2N_1 + N_2 + 3\left(24 - 20\log\frac{\Delta f}{0{,}4}\right) \leq 0$$

for VHF FM sound broadcasting signals below 107.7 MHz,

where the frequencies of the two VHF FM sound broadcasting signals produce, within the receiver, a two-signal, third-order intermodulation product on the desired VOR frequency.

N_1 and N_2 are the levels (dBm) of the two VHF FM sound broadcasting signals at the VOR receiver input. Neither level shall exceed the desensitization criteria set forth in 3.3.8.2.

$\Delta f = 108.1 - f_1$, where f_1 is the frequency of N_1, the VHF FM sound broadcasting signal closer to 108.1 MHz.

3.3.8.2 The VOR receiving system shall not be desensitized in the presence of VHF FM broadcast signals having levels in accordance with the following table:

Frequency (MHz)	*Maximum level of unwanted signal at receiver input (dBm)*
88-102	+15
104	+10
106	+ 5
107.9	–10

Note 1.— The relationship is linear between adjacent points designated by the above frequencies.

Note 2.— Guidance material on immunity criteria to be used for the performance quoted in 3.3.8.1 and 3.3.8.2 is contained in the Handbook on Radio Frequency Spectrum Requirements for Civil Aviation *(Doc 9718), Volume II.*

3.4 Specification for non-directional radio beacon (NDB)

3.4.1 Definitions

Note.— In Attachment C, guidance is given on the meaning and application of rated coverage and effective coverage and on coverage of NDBs.

Average radius of rated coverage. The radius of a circle having the same area as the rated coverage.

Effective coverage. The area surrounding an NDB within which bearings can be obtained with an accuracy sufficient for the nature of the operation concerned.

Locator. An LF/MF NDB used as an aid to final approach.

Note.— A locator usually has an average radius of rated coverage of between 18.5 and 46.3 km (10 and 25 NM).

Rated coverage. The area surrounding an NDB within which the strength of the vertical field of the ground wave exceeds the minimum value specified for the geographical area in which the radio beacon is situated.

Note.— The above definition is intended to establish a method of rating radio beacons on the normal coverage to be expected in the absence of sky wave transmission and/or anomalous propagation from the radio beacon concerned or interference from other LF/MF facilities, but taking into account the atmospheric noise in the geographical area concerned.

3.4.2 Coverage

3.4.2.1 **Recommendation.—** *The minimum value of field strength in the rated coverage of an NDB should be 70°microvolts per metre.*

Note 1.— Guidance on the field strengths required particularly in the latitudes between 30°N and 30°S is given in 6.1 of Attachment C, and the relevant ITU provisions are given in Chapter VIII, Article 35, Section IV, Part B of the Radio Regulations.

Note 2.— The selection of locations and times at which the field strength is measured is important in order to avoid abnormal results for the locality concerned; locations on air routes in the area around the beacon are operationally most significant.

3.4.2.2 All notifications or promulgations of NDBs shall be based upon the average radius of the rated coverage.

Note 1.— In classifying radio beacons in areas where substantial variations in rated coverage may occur diurnally and seasonally, such variations should be taken into account.

Note 2.— Beacons having an average radius of rated coverage of between 46.3 and 278 km (25 and 150 NM) may be designated by the nearest multiple of 46.3 km (25 NM) to the average radius of rated coverage, and beacons of rated coverage over 278 km (150 NM) to the nearest multiple of 92.7 km (50 NM).

3.4.2.3 **Recommendation.—** *Where the rated coverage of an NDB is materially different in various operationally significant sectors, its classification should be expressed in terms of the average radius of rated coverage and the angular limits of each sector as follows:*

Radius of coverage of sector/angular limits of sector expressed as magnetic bearing clockwise from the beacon.

Where it is desirable to classify an NDB in such a manner, the number of sectors should be kept to a minimum and preferably should not exceed two.

Note.— The average radius of a given sector of the rated coverage is equal to the radius of the corresponding circle-sector of the same area. Example:

150/210° – 30°
100/30° – 210°.

3.4.3 Limitations in radiated power

The power radiated from an NDB shall not exceed by more than 2 dB that necessary to achieve its agreed rated coverage, except that this power may be increased if coordinated regionally or if no harmful interference to other facilities will result.

3.4.4 Radio frequencies

3.4.4.1 The radio frequencies assigned to NDBs shall be selected from those available in that portion of the spectrum between 190 kHz and 1 750 kHz.

3.4.4.2 The frequency tolerance applicable to NDBs shall be 0.01 per cent except that, for NDBs of antenna power above 200 W using frequencies of 1 606.5 kHz and above, the tolerance shall be 0.005 per cent.

3.4.4.3 **Recommendation.—** *Where two locators are used as supplements to an ILS, the frequency separation between the carriers of the two should be not less than 15 kHz to ensure correct operation of the radio compass, and preferably not more than 25 kHz in order to permit a quick tuning shift in cases where an aircraft has only one radio compass.*

3.4.4.4 Where locators associated with ILS facilities serving opposite ends of a single runway are assigned a common frequency, provision shall be made to ensure that the facility not in operational use cannot radiate.

Note.— Additional guidance on the operation of locator beacons on common frequency channels is contained in Volume V, Chapter 3, 3.2.2.

3.4.5 Identification

3.4.5.1 Each NDB shall be individually identified by a two- or three-letter International Morse Code group transmitted at a rate corresponding to approximately 7 words per minute.

3.4.5.2 The complete identification shall be transmitted at least once every 30 seconds, except where the beacon identification is effected by on/off keying of the carrier. In this latter case, the identification shall be at approximately 1-minute intervals, except that a shorter interval may be used at particular NDB stations where this is found to be operationally desirable.

3.4.5.2.1 **Recommendation.—** *Except for those cases where the beacon identification is effected by on/off keying of the carrier, the identification signal should be transmitted at least three times each 30 seconds, spaced equally within that time period.*

3.4.5.3 For NDBs with an average radius of rated coverage of 92.7 km (50 NM) or less that are primarily approach and holding aids in the vicinity of an aerodrome, the identification shall be transmitted at least three times each 30 seconds, spaced equally within that time period.

3.4.5.4 The frequency of the modulating tone used for identification shall be 1 020 Hz plus or minus 50 Hz or 400 Hz plus or minus 25 Hz.

Note.— Determination of the figure to be used would be made regionally, in the light of the considerations contained in Attachment C, 6.5.

3.4.6 Characteristics of emissions

Note.— The following specifications are not intended to preclude employment of modulations or types of modulations that may be utilized in NDBs in addition to those specified for identification, including simultaneous identification and voice modulation, provided that these additional modulations do not materially affect the operational performance of the NDBs in conjunction with currently used airborne direction finders, and provided their use does not cause harmful interference to other NDB services.

3.4.6.1 Except as provided in 3.4.6.1.1, all NDBs shall radiate an uninterrupted carrier and be identified by on/off keying of an amplitude modulating tone (NON/A2A).

3.4.6.1.1 NDBs other than those wholly or partly serving as holding, approach and landing aids, or those having an average radius of rated coverage of less than 92.7 km (50 NM), may be identified by on/off keying of the unmodulated carrier (NON/A1A) if they are in areas of high beacon density and/or where the required rated coverage is not practicable of achievement because of:

a) radio interference from radio stations;

b) high atmospheric noise;

c) local conditions.

Note.— In selecting the types of emission, the possibility of confusion, arising from an aircraft tuning from a NON/A2A facility to a NON/A1A facility without changing the radio compass from "MCW" to "CW" operation, will need to be kept in mind.

3.4.6.2 For each NDB identified by on/off keying of an audio modulating tone, the depth of modulation shall be maintained as near to 95 per cent as practicable.

3.4.6.3 For each NDB identified by on/off keying of an audio modulating tone, the characteristics of emission during identification shall be such as to ensure satisfactory identification at the limit of its rated coverage.

Note 1.— The foregoing requirement necessitates as high a percentage modulation as practicable, together with maintenance of an adequate radiated carrier power during identification.

Note 2.— With a direction-finder pass band of plus or minus 3 kHz about the carrier, a signal to noise ratio of 6 dB at the limit of rated coverage will, in general, meet the foregoing requirement.

Note 3.— Some considerations with respect to modulation depth are contained in Attachment C, 6.4.

3.4.6.4 **Recommendation.—** *The carrier power of an NDB with NON/A2A emissions should not fall when the identity signal is being radiated except that, in the case of an NDB having an average radius of rated coverage exceeding 92.7 km (50 NM), a fall of not more than 1.5 dB may be accepted.*

3.4.6.5 Unwanted audio frequency modulations shall total less than 5 per cent of the amplitude of the carrier.

Note.— Reliable performance of airborne automatic direction-finding equipment (ADF) may be seriously prejudiced if the beacon emission contains modulation by an audio frequency equal or close to the loop switching frequency or its second harmonic. The loop switching frequencies in currently used equipment lie between 30 Hz and 120 Hz.

3.4.6.6 The bandwidth of emissions and the level of spurious emissions shall be kept at the lowest value that the state of technique and the nature of the service permit.

Note.— Article S3 of the ITU Radio Regulations contains the general provisions with respect to technical characteristics of equipment and emissions. The Radio Regulations contain specific provisions relating to necessary bandwidth, frequency tolerance, spurious emissions and classification of emissions (see Appendices APS1, APS2 and APS3).

3.4.7 Siting of locators

3.4.7.1 **Recommendation.—** *Where locators are used as a supplement to the ILS, they should be located at the sites of the outer and middle marker beacons. Where only one locator is used as a supplement to the ILS, preference should be given to location at the site of the outer marker beacon. Where locators are employed as an aid to final approach in the absence of an ILS, equivalent locations to those applying when an ILS is installed should be selected, taking into account the relevant obstacle clearance provisions of the* PANS-OPS *(Doc 8168).*

3.4.7.2 **Recommendation.—** *Where locators are installed at both the middle and outer marker positions, they should be located, where practicable, on the same side of the extended centre line of the runway in order to provide a track between the locators which will be more nearly parallel to the centre line of the runway.*

3.4.8 Monitoring

3.4.8.1 For each NDB, suitable means shall be provided to enable detection of any of the following conditions at an appropriate location:

a) a decrease in radiated carrier power of more than 50 per cent below that required for the rated coverage;

b) failure to transmit the identification signal;

c) malfunctioning or failure of the means of monitoring itself.

3.4.8.2 **Recommendation.—** *When an NDB is operated from a power source having a frequency which is close to airborne ADF equipment switching frequencies, and where the design of the NDB is such that the power supply frequency is likely to appear as a modulation product on the emission, the means of monitoring should be capable of detecting such power supply modulation on the carrier in excess of 5 per cent.*

3.4.8.3 During the hours of service of a locator, the means of monitoring shall provide for a continuous check on the functioning of the locator as prescribed in 3.4.8.1 a), b) and c).

3.4.8.4 **Recommendation.—** *During the hours of service of an NDB other than a locator, the means of monitoring should provide for a continuous check on the functioning of the NDB as prescribed in 3.4.8.1 a), b) and c).*

Note.— Guidance material on the testing of NDBs is contained in 6.6 of Attachment C.

3.5 Specification for UHF distance measuring equipment (DME)

Note.— In the following section, provision is made for two types of DME facility: DME/N for general application, and DME/P as outlined in 3.11.3.

3.5.1 Definitions

Control motion noise (CMN). That portion of the guidance signal error which causes control surface, wheel and column motion and could affect aircraft attitude angle during coupled flight, but does not cause aircraft displacement from the desired course and/or glide path. (See 3.11.)

DME dead time. A period immediately following the decoding of a valid interrogation during which a received interrogation will not cause a reply to be generated.

Note.— Dead time is intended to prevent the transponder from replying to echoes resulting from multipath effects.

DME/N. Distance measuring equipment, primarily serving operational needs of en-route or TMA navigation, where the "N" stands for narrow spectrum characteristics.

DME/P. The distance measuring element of the MLS, where the "P" stands for precise distance measurement. The spectrum characteristics are those of DME/N.

Equivalent isotropically radiated power (EIRP). The product of the power supplied to the antenna and the antenna gain in a given direction relative to an isotropic antenna (absolute or isotropic gain).

Final approach (FA) mode. The condition of DME/P operation which supports flight operations in the final approach and runway regions.

Initial approach (IA) mode. The condition of DME/P operation which supports those flight operations outside the final approach region and which is interoperable with DME/N.

Key down time. The time during which a dot or dash of a Morse character is being transmitted.

MLS approach reference datum. A point on the minimum glide path at a specified height above the threshold. (See 3.11.)

MLS datum point. The point on the runway centre line closest to the phase centre of the approach elevation antenna. (See 3.11.)

Mode W, X, Y, Z. *A* method *of coding the DME transmissions by time spacing pulses of a pulse pair, so that each frequency can be used more than once.*

Partial rise time. The time as measured between the 5 and 30 per cent amplitude points on the leading edge of the pulse envelope, i.e. between points h and i on Figures 3-1 and 3-2.

Path following error (PFE). That portion of the guidance signal error which could cause aircraft displacement from the desired course and/or glide path. (See 3.11.)

Pulse amplitude. The maximum voltage of the pulse envelope, i.e. A in Figure 3-1.

Pulse decay time. The time as measured between the 90 and 10 per cent amplitude points on the trailing edge of the pulse envelope, i.e. between points e and g on Figure 3-1.

Pulse code. The method of differentiating between W, X, Y and Z modes and between FA and IA modes.

Pulse duration. The time interval between the 50 per cent amplitude point on leading and trailing edges of the pulse envelope, i.e. between points b and f on Figure 3-1.

Pulse rise time. The time as measured between the 10 and 90 per cent amplitude points on the leading edge of the pulse envelope, i.e. between points a and c on Figure 3-1.

Reply efficiency. The ratio of replies transmitted by the transponder to the total of received valid interrogations.

Search. The condition which exists when the DME interrogator is attempting to acquire and lock onto the response to its own interrogations from the selected transponder.

System efficiency. The ratio of valid replies processed by the interrogator to the total of its own interrogations.

Track. The condition which exists when the DME interrogator has locked onto replies in response to its own interrogations, and is continuously providing a distance measurement.

Transmission rate. The average number of pulse pairs transmitted from the transponder per second.

Virtual origin. The point at which the straight line through the 30 per cent and 5 per cent amplitude points on the pulse leading edge intersects the 0 per cent amplitude axis (see Figure 3-2).

3.5.2 General

3.5.2.1 The DME system shall provide for continuous and accurate indication in the cockpit of the slant range distance of an equipped aircraft from an equipped ground reference point.

3.5.2.2 The system shall comprise two basic components, one fitted in the aircraft, the other installed on the ground. The aircraft component shall be referred to as the interrogator and the ground component as the transponder.

3.5.2.3 In operation, interrogators shall interrogate transponders which shall, in turn, transmit to the interrogator replies synchronized with the interrogations, thus providing means for accurate measurement of distance.

3.5.2.4 DME/P shall have two operating modes, IA and FA.

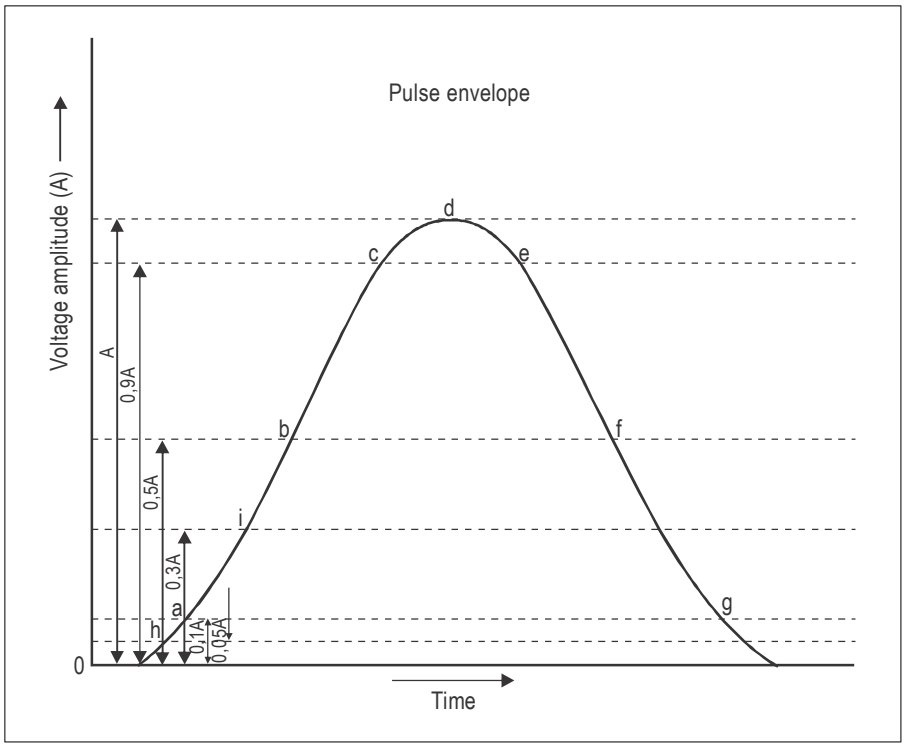

Figure 3-1

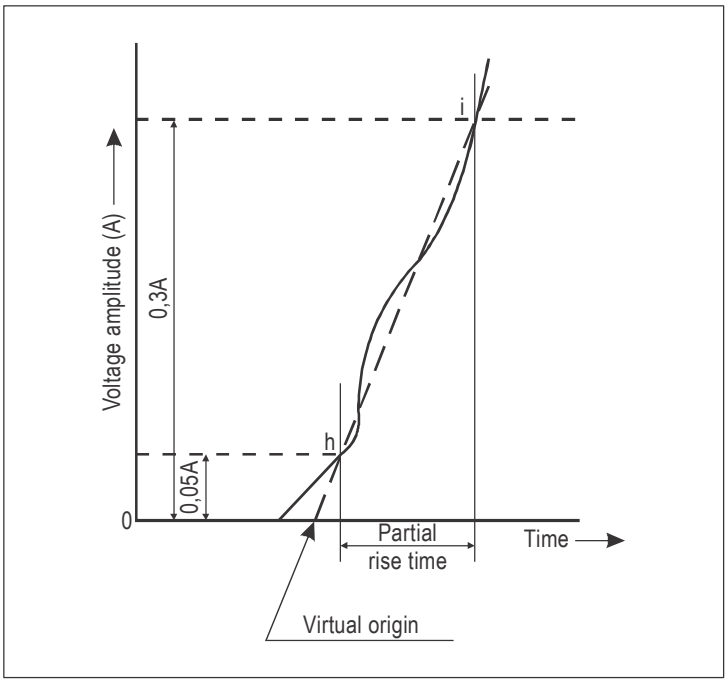

Figure 3-2

3.5.2.5 When a DME is associated with an ILS, MLS or VOR for the purpose of constituting a single facility, they shall:

a) be operated on a standard frequency pairing in accordance with 3.5.3.3.4;

b) be collocated within the limits prescribed for associated facilities in 3.5.2.6; and

c) comply with the identification provisions of 3.5.3.6.4.

3.5.2.6 *Collocation limits for a DME facility associated with an ILS, MLS or VOR facility*

3.5.2.6.1 Associated VOR and DME facilities shall be collocated in accordance with the following:

a) for those facilities used in terminal areas for approach purposes or other procedures where the highest position fixing accuracy of system capability is required, the separation of the VOR and DME antennas does not exceed 80 m (260 ft);

b) for purposes other than those indicated in a), the separation of the VOR and DME antennas does not exceed 600 m (2 000 ft).

3.5.2.6.2 *Association of DME with ILS*

Note.— Attachment C, 2.11 gives guidance on the association of DME with ILS.

3.5.2.6.3 *Association of DME with MLS*

3.5.2.6.3.1 **Recommendation.—** *If a DME/P is used to provide ranging information, it should be sited as close as possible to the MLS azimuth facility.*

Note.— Attachment G, 5 and Attachment C, 7.1.6 give guidance on siting of DME with MLS. This guidance sets forth, in particular, appropriate steps to be taken to prevent different zero range indication if DME/P associated with MLS and DME/N associated with ILS serve the same runway.

3.5.2.7 The Standards in 3.5.3, 3.5.4 and 3.5.5 denoted by ‡ shall apply only to DME equipment first installed after 1 January 1989.

3.5.3 System characteristics

3.5.3.1 *Performance*

3.5.3.1.1 *Range.* The system shall provide a means of measurement of slant range distance from an aircraft to a selected transponder to the limit of coverage prescribed by the operational requirements for the selected transponder.

3.5.3.1.2 *Coverage*

3.5.3.1.2.1 The DME/N shall provide signals such as to permit satisfactory operation of a typical aircraft installation at the levels and distances required for operational reasons, and up to an elevation angle of at least 40 degrees.

Note.— Guidance to support performance-based navigation as described in the Performance-based Navigation (PBN) Manual *(Doc 9613) is provided in Attachment C, 7.2.1.3.*

3.5.3.1.2.2 When associated with a VOR, DME/N coverage shall be at least that of the VOR to the extent practicable.

3.5.3.1.2.3 When associated with an ILS, DME/N coverage shall be at least that of the ILS localizer coverage sector within plus or minus 10 degrees, as defined in Chapter 3, 3.1.3.3.1.

Note.— Guidance relating to ILS-associated DME/N is provided in Attachment C, 7.1.6.3.

3.5.3.1.2.4 DME/P coverage or DME/N coverage when associated with an MLS shall be at least that provided by the MLS azimuth angle guidance coverage sectors.

Note.— This is not intended to specify the operational range and coverage to which the system may be used; spacing of facilities already installed may limit the range in certain areas.

3.5.3.1.3 *Accuracy*

3.5.3.1.3.1 *System accuracy.* The accuracy standards specified in 3.5.3.1.4, 3.5.4.5 and 3.5.5.4 shall be met on a 95 per cent probability basis.

3.5.3.1.4 *DME/P accuracy*

Note 1.— In the following, two accuracy standards, 1 and 2, are stated for the DME/P to accommodate a variety of applications.

Note 2.— Guidance on accuracy standards is given in Attachment C, 7.3.2.

3.5.3.1.4.1 *Error components.* The path following error (PFE) shall be comprised of those frequency components of the DME/P error at the output of the interrogator which lie below 1.5 rad/s. The control motion noise (CMN) shall be comprised of those frequency components of the DME/P error at the output of the interrogator which lie between 0.5 rad/s and 10 rad/s.

Note.— Specified error limits at a point are to be applied over a flight path that includes that point. Information on the interpretation of DME/P errors and the measurement of those errors over an interval appropriate for flight inspection is provided in Attachment C, 7.3.6.1.

3.5.3.1.4.2 Errors on the extended runway centre line shall not exceed the values given in Table B at the end of this chapter.

3.5.3.1.4.3 In the approach sector, away from the extended runway centre line, the allowable PFE for both standard 1 and standard 2 shall be permitted to increase linearly with angle up to plus or minus 40 degrees MLS azimuth angle where the permitted error is 1.5 times that on the extended runway centre line at the same distance. The allowable CMN shall not increase with angle. There shall be no degradation of either PFE or CMN with elevation angle.

3.5.3.2 *Radio frequencies and polarization.* The system shall operate with vertical polarization in the frequency band 960 MHz to 1 215 MHz. The interrogation and reply frequencies shall be assigned with 1MHz spacing between channels.

3.5.3.3 *Channelling*

3.5.3.3.1 DME operating channels shall be formed by pairing interrogation and reply frequencies and by pulse coding on the paired frequencies.

3.5.3.3.2 *Pulse coding.* DME/P channels shall have two different interrogation pulse codes as shown in the table in 3.5.4.4.1. One shall be used in the initial approach (IA) mode; the other shall be used in the final approach (FA) mode.

3.5.3.3.3 DME operating channels shall be chosen from Table A (located at the end of this chapter), of 352 channels in which the channel numbers, frequencies, and pulse codes are assigned.

3.5.3.3.4 *Channel pairing.* When a DME transponder is intended to operate in association with a single VHF navigation facility in the 108 MHz to 117.95 MHz frequency band and/or an MLS angle facility in the 5 031.0 MHz to 5 090.7 MHz frequency band, the DME operating channel shall be paired with the VHF channel and/or MLS angle frequency as given in Table A.

Note.— There may be instances when a DME channel will be paired with both the ILS frequency and an MLS channel (see Volume V, Chapter 4, 4.3).

3.5.3.4 *Interrogation pulse repetition frequency*

Note.— If the interrogator operates on more than one channel in one second, the following specifications apply to the sum of interrogations on all channels.

3.5.3.4.1 *DME/N.* The interrogator average pulse repetition frequency (PRF) shall not exceed 30 pairs of pulses per second, based on the assumption that at least 95 per cent of the time is occupied for tracking.

3.5.3.4.2 *DME/N.* If it is desired to decrease the time of search, the PRF may be increased during search but shall not exceed 150 pairs of pulses per second.

3.5.3.4.3 *DME/N.* **Recommendation.—** *After 15 000 pairs of pulses have been transmitted without acquiring indication of distance, the PRF should not exceed 60 pairs of pulses per second thereafter, until a change in operating channel is made or successful search is completed.*

‡3.5.3.4.4 *DME/N.* When, after a time period of 30 seconds, tracking has not been established, the pulse pair repetition frequency shall not exceed 30 pulse pairs per second thereafter.

3.5.3.4.5 *DME/P.* The interrogator pulse repetition frequency shall not exceed the following number of pulse pairs per second:

a)	search	40
b)	aircraft on the ground	5
c)	initial approach mode track	16
d)	final approach mode track	40

Note 1.— A pulse repetition frequency (PRF) of 5 pulse pairs per second for aircraft on the ground may be exceeded if the *aircraft requires accurate range information.*

Note 2.— It is intended that all PRF changes be achieved by automatic means.

3.5.3.5 *Aircraft handling capacity of the system*

3.5.3.5.1 The aircraft handling capacity of transponders in an area shall be adequate for the peak traffic of the area or 100 aircraft, whichever is the lesser.

3.5.3.5.2 **Recommendation.—** *Where the peak traffic in an area exceeds 100 aircraft, the transponder should be capable of handling that peak traffic.*

Note.— Guidance material on aircraft handling capacity will be found in Attachment C, 7.1.5.

3.5.3.6 *Transponder identification*

3.5.3.6.1 All transponders shall transmit an identification signal in one of the following forms as required by 3.5.3.6.5:

a) an "independent" identification consisting of coded (International Morse Code) identity pulses which can be used with all transponders;

b) an "associated" signal which can be used for transponders specifically associated with a VHF navigation or an MLS angle guidance facility which itself transmits an identification signal.

Note.— An MLS angle guidance facility provides its identification as a digital word transmitted on the data channel into the approach and back azimuth coverage regions as specified in 3.11.4.6.2.1.

3.5.3.6.2 Both systems of identification shall use signals, which shall consist of the transmission for an appropriate period of a series of paired pulses transmitted at a repetition rate of 1 350 pulse pairs per second, and shall temporarily replace all reply pulses that would normally occur at that time except as in 3.5.3.6.2.2. These pulses shall have similar characteristics to the other pulses of the reply signals.

‡3.5.3.6.2.1 *DME/N.* Reply pulses shall be transmitted between key down times.

3.5.3.6.2.2 *DME/N.* **Recommendation.—** *If it is desired to preserve a constant duty cycle, an equalizing pair of pulses, having the same characteristics as the identification pulse pairs, should be transmitted 100 microseconds plus or minus 10 microseconds after each identity pair.*

3.5.3.6.2.3 *DME/P.* Reply pulses shall be transmitted between key down times.

3.5.3.6.2.4 For the DME/P transponder, reply pulse pairs to valid FA mode interrogations shall also be transmitted during key down times and have priority over identification pulse pairs.

3.5.3.6.2.5 The DME/P transponder shall not employ the equalizing pair of pulses of 3.5.3.6.2.2.

3.5.3.6.3 The characteristics of the "independent" identification signal shall be as follows:

a) the identity signal shall consist of the transmission of the beacon code in the form of dots and dashes (International Morse Code) of identity pulses at least once every 40 seconds, at a rate of at least 6 words per minute; and

b) the identification code characteristic and letter rate for the DME transponder shall conform to the following to ensure that the maximum total key down time does not exceed 5 seconds per identification code group. The dots shall be a time duration of 0.1 second to 0.160 second. The dashes shall be typically 3 times the duration of the dots. The duration between dots and/or dashes shall be equal to that of one dot plus or minus 10 per cent. The time duration between letters or numerals shall not be less than three dots. The total period for transmission of an identification code group shall not exceed 10 seconds.

Note.— The tone identification signal is transmitted at a repetition rate of 1 350 pps. This frequency may be used directly in the airborne equipment as an aural output for the pilot, or other frequencies may be generated at the option of the interrogator designer (see 3.5.3.6.2).

3.5.3.6.4 The characteristics of the "associated" signal shall be as follows:

a) when associated with a VHF or an MLS angle facility, the identification shall be transmitted in the form of dots and dashes (International Morse Code) as in 3.5.3.6.3 and shall be synchronized with the VHF facility identification code;

b) each 40-second interval shall be divided into four or more equal periods, with the transponder identification transmitted during one period only and the associated VHF and MLS angle facility identification, where these are provided, transmitted during the remaining periods;

c) for a DME transponder associated with an MLS, the identification shall be the last three letters of the MLS angle facility identification specified in 3.11.4.6.2.1.

3.5.3.6.5 *Identification implementation*

3.5.3.6.5.1 The "independent" identification code shall be employed wherever a transponder is not specifically associated with a VHF navigational facility or an MLS facility.

3.5.3.6.5.2 Wherever a transponder is specifically associated with a VHF navigational facility or an MLS facility, identification shall be provided by the "associated" code.

3.5.3.6.5.3 When voice communications are being radiated on an associated VHF navigational facility, an "associated" signal from the transponder shall not be suppressed.

3.5.3.7 *DME/P mode transition*

3.5.3.7.1 The DME/P interrogator for standard 1 accuracy shall change from IA mode track to FA mode track at 13 km (7 NM) from the transponder when approaching the transponder, or any other situation when within 13 km (7 NM).

3.5.3.7.2 For standard 1 accuracy, the transition from IA mode to FA mode track operation may be initiated within 14.8 m (8 NM) from the transponder. Outside 14.8 km (8 NM), the interrogator shall not interrogate in the FA mode.

Note.— Paragraph 3.5.3.7.1 does not apply if the transponder is a DME/N or if the DME/P transponder FA mode is inoperative.

3.5.3.8 *System efficiency.* The DME/P system accuracy of 3.5.3.1.4 shall be achieved with a system efficiency of 50 per cent or more.

3.5.4 Detailed technical characteristics of transponder and associated monitor

3.5.4.1 *Transmitter*

3.5.4.1.1 *Frequency of operation.* The transponder shall transmit on the reply frequency appropriate to the assigned DME channel (see 3.5.3.3.3).

3.5.4.1.2 *Frequency stability.* The radio frequency of operation shall not vary more than plus or minus 0.002 per cent from the assigned frequency.

3.5.4.1.3 *Pulse shape and spectrum.* The following shall apply to all radiated pulses:

a) *Pulse rise time.*

1) *DME/N.* Pulse rise time shall not exceed 3 microseconds.

2) *DME/P.* Pulse rise time shall not exceed 1.6 microseconds. For the FA mode, the pulse shall have a partial rise time of 0.25 plus or minus 0.05 microsecond. With respect to the FA mode and accuracy standard 1, the slope of the pulse in the partial rise time shall not vary by more than plus or minus 20 per cent. For accuracy standard 2, the slope shall not vary by more than plus or minus 10 per cent.

3) *DME/P.* **Recommendation.—** *Pulse rise time should not exceed 1.2 microseconds.*

b) Pulse duration shall be 3.5 microseconds plus or minus 0.5 microsecond.

c) Pulse decay time shall nominally be 2.5 microseconds but shall not exceed 3.5 microseconds.

d) The instantaneous amplitude of the pulse shall not, at any instant between the point of the leading edge which is 95 per cent of maximum amplitude and the point of the trailing edge which is 95 per cent of the maximum amplitude, fall below a value which is 95 per cent of the maximum voltage amplitude of the pulse.

e) For DME/N and DME/P: the spectrum of the pulse modulated signal shall be such that during the pulse the EIRP contained in a 0.5 MHz band centred on frequencies 0.8 MHz above and 0.8 MHz below the nominal channel frequency in each case shall not exceed 200 mW, and the EIRP contained in a 0.5 MHz band centred on frequencies 2 MHz above and 2 MHz below the nominal channel frequency in each case shall not exceed 2 mW. The EIRP contained within any 0.5 MHz band shall decrease monotonically as the band centre frequency moves away from the nominal channel frequency.

Note.— Guidance material relating to the pulse spectrum measurement is provided in Document EUROCAE ED-57 (including Amendment No. 1).

f) To ensure proper operation of the thresholding techniques, the instantaneous magnitude of any pulse turn-on transients which occur in time prior to the virtual origin shall be less than one per cent of the pulse peak amplitude. Initiation of the turn-on process shall not commence sooner than 1 microsecond prior to the virtual origin.

Note 1.— The time "during the pulse" encompasses the total interval from the beginning of pulse transmission to its end. For practical reasons, this interval may be measured between the 5 per cent points on the leading and trailing edges of the pulse envelope.

Note 2.— The power contained in the frequency bands specified in 3.5.4.1.3 e) is the average power during the pulse. Average power in a given frequency band is the energy contained in this frequency band divided by the time of pulse transmission according to Note 1.

3.5.4.1.4 *Pulse spacing*

3.5.4.1.4.1 The spacing of the constituent pulses of transmitted pulse pairs shall be as given in the table in 3.5.4.4.1.

3.5.4.1.4.2 *DME/N.* The tolerance on the pulse spacing shall be plus or minus 0.25 microsecond.

3.5.4.1.4.3 *DME/N.* **Recommendation.—** *The tolerance on the DME/N pulse spacing should be plus or minus 0.10 microsecond.*

3.5.4.1.4.4 *DME/P.* The tolerance on the pulse spacing shall be plus or minus 0.10 microsecond.

3.5.4.1.4.5 The pulse spacings shall be measured between the half voltage points on the leading edges of the pulses.

3.5.4.1.5 *Peak power output*

3.5.4.1.5.1 *DME/N.* **Recommendation.—** *The peak EIRP should not be less than that required to ensure a peak pulse power density of approximately minus 83 dBW/m^2 at the maximum specified service range and level.*

‡3.5.4.1.5.2 *DME/N.* The peak equivalent isotropically radiated power shall not be less than that required to ensure a peak pulse power density of minus 89 dBW/m^2 under all operational weather conditions at any point within coverage specified in 3.5.3.1.2.

Note.— Although the Standard in 3.5.4.1.5.2 implies an improved interrogator receiver sensitivity, it is intended that the power density specified in 3.5.4.1.5.1 be available at the maximum specified service range and level.

3.5.4.1.5.3 *DME/P.* The peak equivalent isotropically radiated power shall not be less than that required to ensure the following peak pulse power densities under all operational weather conditions:

a) minus 89 dBW/m^2 at any point within the coverage specified in 3.5.3.1.2 at ranges greater than 13 km (7 NM) from the transponder antenna;

b) minus 75 dBW/m^2 at any point within the coverage specified in 3.5.3.1.2 at ranges less than 13 km (7 NM) from the transponder antenna;

c) minus 70 dBW/m^2 at the MLS approach reference datum;

d) minus 79 dBW/m^2 at 2.5 m (8 ft) above the runway surface, at the MLS datum point, or at the farthest point on the runway centre line which is in line of sight of the DME transponder antenna.

Note.— Guidance material relating to the EIRP may be found in Attachment C, 7.2.1 and 7.3.8.

3.5.4.1.5.4 The peak power of the constituent pulses of any pair of pulses shall not differ by more than 1 dB.

3.5.4.1.5.5 **Recommendation.—** *The reply capability of the transmitter should be such that the transponder should be capable of continuous operation at a transmission rate of 2 700 plus or minus 90 pulse pairs per second (if 100 aircraft are to be served).*

Note.— Guidance on the relationship between number of aircraft and transmission rate is given in Attachment C, 7.1.5.

3.5.4.1.5.6 The transmitter shall operate at a transmission rate, including randomly distributed pulse pairs and distance reply pulse pairs, of not less than 700 pulse pairs per second except during identity. The minimum transmission rate shall be as close as practicable to 700 pulse pairs per second. For DME/P, in no case shall it exceed 1 200 pulse pairs per second.

Note.— Operating DME transponders with quiescent transmission rates close to 700 pulse pairs per second will minimize the effects of pulse interference, particularly to other aviation services such as GNSS.

3.5.4.1.6 *Spurious radiation.* During intervals between transmission of individual pulses, the spurious power received and measured in a receiver having the same characteristics as a transponder receiver, but tuned to any DME interrogation or reply frequency, shall be more than 50 dB below the peak pulse power received and measured in the same receiver tuned to the reply frequency in use during the transmission of the required pulses. This provision refers to all spurious transmissions, including modulator and electrical interference.

‡3.5.4.1.6.1 *DME/N.* The spurious power level specified in 3.5.4.1.6 shall be more than 80 dB below the peak pulse power level.

3.5.4.1.6.2 *DME/P.* The spurious power level specified in 3.5.4.1.6 shall be more than 80 dB below the peak pulse power level.

3.5.4.1.6.3 *Out-of-band spurious radiation.* At all frequencies from 10 to 1 800 MHz, but excluding the band of frequencies from 960 to 1 215 MHz, the spurious output of the DME transponder transmitter shall not exceed minus 40 dBm in any one kHz of receiver bandwidth.

3.5.4.1.6.4 The equivalent isotropically radiated power of any CW harmonic of the carrier frequency on any DME operating channel shall not exceed minus 10 dBm.

3.5.4.2 *Receiver*

3.5.4.2.1 *Frequency of operation.* The receiver centre frequency shall be the interrogation frequency appropriate to the assigned DME operating channel (see 3.5.3.3.3).

3.5.4.2.2 *Frequency stability.* The centre frequency of the receiver shall not vary more than plus or minus 0.002 per cent from the assigned frequency.

3.5.4.2.3 *Transponder sensitivity*

3.5.4.2.3.1 In the absence of all interrogation pulse pairs, with the exception of those necessary to perform the sensitivity measurement, interrogation pulse pairs with the correct spacing and nominal frequency shall trigger the transponder if the peak power density at the transponder antenna is at least:

a) minus 103 dBW/m^2 for DME/N with coverage range greater than 56 km (30 NM);

b) minus 93 dBW/m^2 for DME/N with coverage range not greater than 56 km (30 NM);

c) minus 86 dBW/m^2 for DME/P IA mode;

d) minus 75 dBW/m^2 for DME/P FA mode.

3.5.4.2.3.2 The minimum power densities specified in 3.5.4.2.3.1 shall cause the transponder to reply with an efficiency of at least:

a) 70 per cent for DME/N;

b) 70 per cent for DME/P IA mode;

c) 80 per cent for DME/P FA mode.

‡3.5.4.2.3.3 *DME/N dynamic range.* The performance of the transponder shall be maintained when the power density of the interrogation signal at the transponder antenna has any value between the minimum specified in 3.5.4.2.3.1 up to a maximum of minus 22 dBW/m^2 when installed with ILS or MLS and minus 35 dBW/m^2 when installed for other applications.

3.5.4.2.3.4 *DME/P dynamic range.* The performance of the transponder shall be maintained when the power density of the interrogation signal at the transponder antenna has any value between the minimum specified in 3.5.4.2.3.1 up to a maximum of minus 22 dBW/m^2.

3.5.4.2.3.5 The transponder sensitivity level shall not vary by more than 1 dB for transponder loadings between 0 and 90 per cent of its maximum transmission rate.

‡3.5.4.2.3.6 *DME/N.* When the spacing of an interrogator pulse pair varies from the nominal value by up to plus or minus 1 microsecond, the receiver sensitivity shall not be reduced by more than 1 dB.

3.5.4.2.3.7 *DME/P.* When the spacing of an interrogator pulse pair varies from the nominal value by up to plus or minus 1 microsecond, the receiver sensitivity shall not be reduced by more than 1 dB.

3.5.4.2.4 *Load limiting*

3.5.4.2.4.1 *DME/N.* **Recommendation.—** *When transponder loading exceeds 90 per cent of the maximum transmission rate, the receiver sensitivity should be automatically reduced in order to limit the transponder replies, so as to ensure that the maximum permissible transmission rate is not exceeded. (The available range of sensitivity reduction should be at least 50 dB.)*

3.5.4.2.4.2 *DME/P.* To prevent transponder overloading the transponder shall automatically limit its replies, so as to ensure that the maximum transmission rate is not exceeded. If the receiver sensitivity reduction is implemented to meet this requirement, it shall be applied to the IA mode only and shall not affect the FA mode.

3.5.4.2.5 *Noise.* When the receiver is interrogated at the power densities specified in 3.5.4.2.3.1 to produce a transmission rate equal to 90 per cent of the maximum, the noise generated pulse pairs shall not exceed 5 per cent of the maximum transmission rate.

3.5.4.2.6 *Bandwidth*

3.5.4.2.6.1 The minimum permissible bandwidth of the receiver shall be such that the transponder sensitivity level shall not deteriorate by more than 3 dB when the total receiver drift is added to an incoming interrogation frequency drift of plus or minus 100 kHz.

3.5.4.2.6.2 *DME/N.* The receiver bandwidth shall be sufficient to allow compliance with 3.5.3.1.3 when the input signals are those specified in 3.5.5.1.3.

3.5.4.2.6.3 *DME/P — IA mode.* The receiver bandwidth shall be sufficient to allow compliance with 3.5.3.1.3 when the input signals are those specified in 3.5.5.1.3. The 12 dB bandwidth shall not exceed 2 MHz and the 60 dB bandwidth shall not exceed 10 MHz.

3.5.4.2.6.4 *DME/P — FA mode.* The receiver bandwidth shall be sufficient to allow compliance with 3.5.3.1.3 when the input signals are those specified in 3.5.5.1.3. The 12 dB bandwidth shall not exceed 6 MHz and the 60 dB bandwidth shall not exceed 20 MHz.

3.5.4.2.6.5 Signals greater than 900 kHz removed from the desired channel nominal frequency and having power densities up to the values specified in 3.5.4.2.3.3 for DME/N and 3.5.4.2.3.4 for DME/P shall not trigger the transponder. Signals arriving at the intermediate frequency shall be suppressed at least 80 dB. All other spurious response or signals within the 960 MHz to 1 215 MHz band and image frequencies shall be suppressed at least 75 dB.

3.5.4.2.7 *Recovery time.* Within 8 microseconds of the reception of a signal between 0 dB and 60 dB above minimum sensitivity level, the minimum sensitivity level of the transponder to a desired signal shall be within 3 dB of the value obtained in the absence of signals. This requirement shall be met with echo suppression circuits, if any, rendered inoperative. The 8 microseconds are to be measured between the half voltage points on the leading edges of the two signals, both of which conform in shape, with the specifications in 3.5.5.1.3.

3.5.4.2.8 *Spurious radiations.* Radiation from any part of the receiver or allied circuits shall meet the requirements stated in 3.5.4.1.6.

3.5.4.2.9 *CW and echo suppression*

Recommendation.— *CW and echo suppression should be adequate for the sites at which the transponders will be used.*

Note.— In this connection, echoes mean undesired signals caused by multipath transmission (reflections, etc.).

3.5.4.2.10 *Protection against interference*

Recommendation.— *Protection against interference outside the DME frequency band should be adequate for the sites at which the transponders will be used.*

3.5.4.3 *Decoding*

3.5.4.3.1 The transponder shall include a decoding circuit such that the transponder can be triggered only by pairs of received pulses having pulse duration and pulse spacings appropriate to interrogator signals as described in 3.5.5.1.3 and 3.5.5.1.4.

3.5.4.3.2 The decoding circuit performance shall not be affected by signals arriving before, between, or after, the constituent pulses of a pair of the correct spacing.

‡3.5.4.3.3 *DME/N — Decoder rejection.* An interrogation pulse pair with a spacing of plus or minus 2 microseconds, or more, from the nominal value and with any signal level up to the value specified in 3.5.4.2.3.3 shall be rejected such that the transmission rate does not exceed the value obtained when interrogations are absent.

3.5.4.3.4 *DME/P — Decoder rejection.* An interrogation pulse pair with a spacing of plus or minus 2 microseconds, or more, from the nominal value and with any signal level up to the value specified in 3.5.4.2.3.4 shall be rejected such that the transmission rate does not exceed the value obtained when interrogations are absent.

3.5.4.4 *Time delay*

3.5.4.4.1 When a DME is associated only with a VHF facility, the time delay shall be the interval from the half voltage point on the leading edge of the second constituent pulse of the interrogation pair and the half voltage point on the leading edge of the second constituent pulse of the reply transmission. This delay shall be consistent with the following table, when it is desired that aircraft interrogators are to indicate distance from the transponder site.

		Pulse pair spacing (μs)		*Time delay (μs)*	
Channel suffix	*Operating mode*	*Interrogation*	*Reply*	*1st pulse timing*	*2nd pulse timing*
X	DME/N	12	12	50	50
	DME/P IA M	12	12	50	–
	DME/P FA M	18	12	56	–
Y	DME/N	36	30	56	50
	DME/P IA M	36	30	56	–
	DME/P FA M	42	30	62	–

		Pulse pair spacing (μs)		*Time delay (μs)*	
W	DME/N	–	–	–	–
	DME/P IA M	24	24	50	–
	DME/P FA M	30	24	56	–
Z	DME/N	–	–	–	–
	DME/P IA M	21	15	56	–
	DME/P FA M	27	15	62	–

Note 1.— W and X are multiplexed on the same frequency.

Note 2.— Z and Y are multiplexed on the same frequency.

3.5.4.4.2 When a DME is associated with an MLS angle facility, the time delay shall be the interval from the half voltage point on the leading edge of the first constituent pulse of the interrogation pair and the half voltage point on the leading edge of the first constituent pulse of the reply transmission. This delay shall be 50 microseconds for mode X channels and 56 microseconds for mode Y channels, when it is desired that aircraft interrogators are to indicate distance from the transponder site.

3.5.4.4.2.1 For DME/P transponders, no time delay adjustment shall be permitted.

3.5.4.4.3 **Recommendation.—** *For the DME/N the transponder time delay should be capable of being set to an appropriate value between the nominal value of the time delay minus 15 microseconds and the nominal value of the time delay, to permit aircraft interrogators to indicate zero distance at a specific point remote from the transponder site.*

Note.— Modes not allowing for the full 15 microseconds range of adjustment in transponder time delay may only be adjustable to the limits given by the transponder circuit delay and recovery time.

‡3.5.4.4.3.1 *DME/N.* The time delay shall be the interval from the half voltage point on the leading edge of the first constituent pulse of the interrogation pair and the half voltage point on the leading edge of the first constituent pulse of the reply transmission.

3.5.4.4.3.2 *DME/P — IA mode.* The time delay shall be the interval from the half voltage point on the leading edge of the first constituent pulse of the interrogation pulse pair to the half voltage point on the leading edge of the first constituent pulse of the reply pulse pair.

3.5.4.4.3.3 *DME/P — FA mode.* The time delay shall be the interval from the virtual origin of the first constituent pulse of the interrogation pulse pair to the virtual origin of the first constituent pulse of the reply pulse pair. The time of arrival measurement points shall be within the partial rise time of the first constituent pulse of the pulse pair in each case.

3.5.4.4.4 *DME/N.* **Recommendation.—** *Transponders should be sited as near to the point at which zero indication is required as is practicable.*

Note 1.— It is desirable that the radius of the sphere at the surface of which zero indication is given be kept as small as possible in order to keep the zone of ambiguity to a minimum.

Note 2.— Guidance material on siting DME with MLS is provided in 7.1.6 of Attachment C and 5 of Attachment G. This guidance material sets forth, in particular, appropriate steps to be taken to prevent different zero range indication if DME/P associated with MLS and DME/N associated with ILS serve the same runway.

3.5.4.5 *Accuracy*

3.5.4.5.1 *DME/N.* The transponder shall not contribute more than plus or minus 1 microsecond (150 m (500 ft)) to the overall system error.

3.5.4.5.1.1 *DME/N.* **Recommendation.—** *The contribution to the total system error due to the combination of the transponder errors, transponder location coordinate errors, propagation effects and random pulse interference effects should be not greater than plus or minus 340 m (0.183 NM) plus 1.25 per cent of distance measure.*

Note.— This error contribution limit includes errors from all causes except the airborne equipment, and assumes that the airborne equipment measures time delay based on the first constituent pulse of a pulse pair.

‡3.5.4.5.1.2 *DME/N.* The combination of the transponder errors, transponder location coordinate errors, propagation effects and random pulse interference effects shall not contribute more than plus or minus 185 m (0.1 NM) to the overall system error.

Note.— This error contribution limit includes errors from all causes except the airborne equipment, and assumes that the airborne equipment measures time delay based on the first constituent pulse of a pulse pair.

‡3.5.4.5.2 *DME/N.* A transponder associated with a landing aid shall not contribute more than plus or minus 0.5 microsecond (75 m (250 ft)) to the overall system error.

3.5.4.5.3 *DME/P — FA mode*

3.5.4.5.3.1 *Accuracy standard 1.* The transponder shall not contribute more than plus or minus 10 m (plus or minus 33 ft) PFE and plus or minus 8 m (plus or minus 26 ft) CMN to the overall system error.

3.5.4.5.3.2 *Accuracy standard 2.* The transponder shall not contribute more than plus or minus 5 m (plus or minus 16 ft) PFE and plus or minus 5 m (plus or minus 16 ft) CMN to the overall system error.

3.5.4.5.4 *DME/P — IA mode.* The transponder shall not contribute more than plus or minus 15 m (plus or minus 50 ft) PFE and plus or minus 10 m (plus or minus 33 ft) CMN to the overall system error.

3.5.4.5.5 **Recommendation.—** *When a DME is associated with an MLS angle facility, the above accuracy should include the error introduced by the first pulse detection due to the pulse spacing tolerances.*

3.5.4.6 *Efficiency*

3.5.4.6.1 The transponder reply efficiency shall be at least 70 per cent for DME/N and DME/P (IA mode) and 80 per cent for DME/P (FA mode) at all values of transponder loading up to the loading corresponding to 3.5.3.5 and at the minimum sensitivity level specified in 3.5.4.2.3.1 and 3.5.4.2.3.5.

Note.— When considering the transponder reply efficiency value, account is to be taken of the DME dead time and of the loading introduced by the monitoring function.

3.5.4.6.2 *Transponder dead time.* The transponder shall be rendered inoperative for a period normally not to exceed 60 microseconds after a valid interrogation decode has occurred. In extreme cases when the geographical site of the transponder is such as to produce undesirable reflection problems, the dead time may be increased but only by the minimum amount necessary to allow the suppression of echoes for DME/N and DME/P IA mode.

3.5.4.6.2.1 In DME/P the IA mode dead time shall not blank the FA mode channel and vice versa.

3.5.4.7 *Monitoring and control*

3.5.4.7.1 Means shall be provided at each transponder site for the automatic monitoring and control of the transponder in use.

3.5.4.7.2 *DME/N monitoring action*

3.5.4.7.2.1 In the event that any of the conditions specified in 3.5.4.7.2.2 occur, the monitor shall cause the following action to take place:

a) a suitable indication shall be given at a control point;

b) the operating transponder shall be automatically switched off; and

c) the standby transponder, if provided, shall be automatically placed in operation.

3.5.4.7.2.2 The monitor shall cause the actions specified in 3.5.4.7.2.1 if:

a) the transponder delay differs from the assigned value by 1 microsecond (150 m (500 ft)) or more;

‡b) in the case of a DME/N associated with a landing aid, the transponder delay differs from the assigned value by 0.5 microsecond (75 m (250 ft)) or more.

3.5.4.7.2.3 **Recommendation.—** *The monitor should cause the actions specified in 3.5.4.7.2.1 if the spacing between the first and second pulse of the transponder pulse pair differs from the nominal value specified in the table following 3.5.4.4.1 by 1 microsecond or more.*

3.5.4.7.2.4 **Recommendation.—** *The monitor should also cause a suitable indication to be given at a control point if any of the following conditions arise:*

a) a fall of 3 dB or more in transponder transmitted power output;

b) a fall of 6 dB or more in the minimum transponder receiver sensitivity (provided that this is not due to the action of the receiver automatic gain reduction circuits);

c) the spacing between the first and second pulse of the transponder reply pulse pair differs from the normal value specified in 3.5.4.1.4 by 1 microsecond or more;

d) variation of the transponder receiver and transmitter frequencies beyond the control range of the reference circuits (if the operating frequencies are not directly crystal controlled).

3.5.4.7.2.5 Means shall be provided so that any of the conditions and malfunctioning enumerated in 3.5.4.7.2.2, 3.5.4.7.2.3 and 3.5.4.7.2.4 which are monitored can persist for a certain period before the monitor takes action. This period shall be as low as practicable, but shall not exceed 10 seconds, consistent with the need for avoiding interruption, due to transient effects, of the service provided by the transponder.

3.5.4.7.2.6 The transponder shall not be triggered more than 120 times per second for either monitoring or automatic frequency control purposes, or both.

3.5.4.7.3 *DME/P monitoring action*

3.5.4.7.3.1 The monitor system shall cause the transponder radiation to cease and provide a warning at a control point if any of the following conditions persist for longer than the period specified:

a) there is a change in transponder PFE that exceeds the limits specified in either 3.5.4.5.3 or 3.5.4.5.4 for more than one second. If the FA mode limit is exceeded, but the IA mode limit is maintained, the IA mode may remain operative;

b) there is a reduction in the EIRP to less than that necessary to satisfy the requirements specified in 3.5.4.1.5.3 for a period of more than one second;

c) there is a reduction of 3 dB or more in the transponder sensitivity necessary to satisfy the requirements specified in 3.5.4.2.3 for a period of more than five seconds in FA mode and ten seconds in IA mode (provided that this is not due to the action of the receiver automatic sensitivity reduction circuits);

d) the spacing between the first and second pulse of the transponder reply pulse pair differs from the value specified in the table in 3.5.4.4.1 by 0.25 microsecond or more for a period of more than one second.

3.5.4.7.3.2 **Recommendation.—** *The monitor should cause a suitable indication to be given at a control point if there is an increase above 0.3 microseconds or a decrease below 0.2 microseconds of the reply pulse partial rise time which persists for more than one second.*

3.5.4.7.3.3 The period during which erroneous guidance information is radiated shall not exceed the periods specified in 3.5.4.7.3.1. Attempts to clear a fault by resetting the primary ground equipment or by switching to standby ground equipment, if fitted, shall be completed within this time. If the fault is not cleared within the time allowed, the radiation shall cease. After shutdown, no attempt shall be made to restore service until a period of 20 seconds has elapsed.

3.5.4.7.3.4 The transponder shall not be triggered for monitoring purposes more than 120 times per second in the IA mode and 150 times per second in the FA mode.

3.5.4.7.3.5 *DME/N and DME/P monitor failure.* Failure of any part of the monitor itself shall automatically produce the same results as the malfunctioning of the element being monitored.

3.5.5 Technical characteristics of interrogator

Note.— The following subparagraphs specify only those interrogator parameters which must be defined to ensure that the interrogator:

a) does not jeopardize the effective operation of the DME system, e.g. by increasing transponder loading abnormally; and

b) is capable of giving accurate distance readings.

3.5.5.1 *Transmitter*

3.5.5.1.1 *Frequency of operation.* The interrogator shall transmit on the interrogation frequency appropriate to the assigned DME channel (see 3.5.3.3.3).

Note.— This specification does not preclude the use of airborne interrogators having less than the total number of operating channels.

3.5.5.1.2 *Frequency stability.* The radio frequency of operation shall not vary more than plus or minus 100 kHz from the assigned value.

3.5.5.1.3 *Pulse shape and spectrum.* The following shall apply to all radiated pulses:

a) *Pulse rise time.*

1) *DME/N.* Pulse rise time shall not exceed 3 microseconds.

2) *DME/P.* Pulse rise time shall not exceed 1.6 microseconds. For the FA mode, the pulse shall have a partial rise time of 0.25 plus or minus 0.05 microsecond. With respect to the FA mode and accuracy standard 1, the slope of the pulse in the partial rise time shall not vary by more than plus or minus 20 per cent. For accuracy standard 2 the slope shall not vary by more than plus or minus 10 per cent.

3) *DME/P.* **Recommendation.—** *Pulse rise time should not exceed 1.2 microseconds.*

b) Pulse duration shall be 3.5 microseconds plus or minus 0.5 microsecond.

c) Pulse decay time shall nominally be 2.5 microseconds, but shall not exceed 3.5 microseconds.

d) The instantaneous amplitude of the pulse shall not, at any instant between the point of the leading edge which is 95 per cent of maximum amplitude and the point of the trailing edge which is 95 per cent of the maximum amplitude, fall below a value which is 95 per cent of the maximum voltage amplitude of the pulse.

e) The spectrum of the pulse modulated signal shall be such that at least 90 per cent of the energy in each pulse shall be within 0.5 MHz in a band centred on the nominal channel frequency.

f) To ensure proper operation of the thresholding techniques, the instantaneous magnitude of any pulse turn-on transients which occur in time prior to the virtual origin shall be less than one per cent of the pulse peak amplitude. Initiation of the turn-on process shall not commence sooner than 1 microsecond prior to the virtual origin.

Note 1.— The lower limit of pulse rise time (see 3.5.5.1.3 a)) and decay time (see 3.5.5.1.3 c)) are governed by the spectrum requirements in 3.5.5.1.3 e).

Note 2.— While 3.5.5.1.3 e) calls for a practically attainable spectrum, it is desirable to strive for the following spectrum control characteristics: the spectrum of the pulse modulated signal is such that the power contained in a 0.5 MHz band centred on frequencies 0.8 MHz above and 0.8 MHz below the nominal channel frequency is, in each case, at least 23 dB below the power contained in a 0.5 MHz band centred on the nominal channel frequency. The power contained in a 0.5 MHz band centred on frequencies 2 MHz above and 2 MHz below the nominal channel frequency is, in each case, at least 38 dB below the power contained in a 0.5 MHz band centred on the nominal channel frequency. Any additional lobe of the spectrum is of less amplitude than the adjacent lobe nearer the nominal channel frequency.

3.5.5.1.4 *Pulse spacing*

3.5.5.1.4.1 The spacing of the constituent pulses of transmitted pulse pairs shall be as given in the table in 3.5.4.4.1.

3.5.5.1.4.2 *DME/N.* The tolerance on the pulse spacing shall be plus or minus 0.5 microsecond.

3.5.5.1.4.3 *DME/N.* **Recommendation.—** *The tolerance on the pulse spacing should be plus or minus 0.25 micro-second.*

3.5.5.1.4.4 *DME/P.* The tolerance on the pulse spacing shall be plus or minus 0.25 microsecond.

3.5.5.1.4.5 The pulse spacing shall be measured between the half voltage points on the leading edges of the pulses.

3.5.5.1.5 *Pulse repetition frequency*

3.5.5.1.5.1 The pulse repetition frequency shall be as specified in 3.5.3.4.

3.5.5.1.5.2 The variation in time between successive pairs of interrogation pulses shall be sufficient to prevent false lock-on.

3.5.5.1.5.3 *DME/P.* In order to achieve the system accuracy specified in 3.5.3.1.4, the variation in time between successive pairs of interrogation pulses shall be sufficiently random to decorrelate high frequency multipath errors.

Note.— Guidance on DME/P multipath effects is given in Attachment C, 7.3.7.

3.5.5.1.6 *Spurious radiation.* During intervals between transmission of individual pulses, the spurious pulse power received and measured in a receiver having the same characteristics of a DME transponder receiver, but tuned to any DME interrogation or reply frequency, shall be more than 50 dB below the peak pulse power received and measured in the same receiver tuned to the interrogation frequency in use during the transmission of the required pulses. This provision shall apply to all spurious pulse transmissions. The spurious CW power radiated from the interrogator on any DME interrogation or reply frequency shall not exceed 20 microwatts (minus 47 dBW).

Note.— Although spurious CW radiation between pulses is limited to levels not exceeding minus 47 dBW, States are cautioned that where DME interrogators and secondary surveillance radar transponders are employed in the same aircraft, it may be necessary to provide protection to airborne SSR in the band 1 015 MHz to 1 045 MHz. This protection may be provided by limiting conducted and radiated CW to a level of the order of minus 77 dBW. Where this level cannot be achieved, the required degree of protection may be provided in planning the relative location of the SSR and DME aircraft antennas. It is to be noted that only a few of these frequencies are utilized in the VHF/DME pairing plan.

3.5.5.1.7 **Recommendation.—** *The spurious pulse power received and measured under the conditions stated in 3.5.5.1.6 should be 80 dB below the required peak pulse power received.*

Note.— Reference 3.5.5.1.6 and 3.5.5.1.7 — although limitation of spurious CW radiation between pulses to levels not exceeding 80 dB below the peak pulse power received is recommended, States are cautioned that where users employ airborne secondary surveillance radar transponders in the same aircraft, it may be necessary to limit direct and radiated CW to not more than 0.02 microwatt in the frequency band 1 015 MHz to 1 045 MHz. It is to be noted that only a few of these frequencies are utilized in the VHF/DME pairing plan.

3.5.5.1.8 *DME/P.* The peak EIRP shall not be less than that required to ensure the power densities in 3.5.4.2.3.1 under all operational weather conditions.

3.5.5.2 *Time delay*

3.5.5.2.1 The time delay shall be consistent with the table in 3.5.4.4.1.

3.5.5.2.2 *DME/N.* The time delay shall be the interval between the time of the half voltage point on the leading edge of the second constituent interrogation pulse and the time at which the distance circuits reach the condition corresponding to zero distance indication.

‡3.5.5.2.3 *DME/N.* The time delay shall be the interval between the time of the half voltage point on the leading edge of the first constituent interrogation pulse and the time at which the distance circuits reach the condition corresponding to zero distance indication.

3.5.5.2.4 *DME/P — IA mode.* The time delay shall be the interval between the time of the half voltage point on the leading edge of the first constituent interrogation pulse and the time at which the distance circuits reach the condition corresponding to zero distance indication.

3.5.5.2.5 *DME/P — FA mode.* The time delay shall be the interval between the virtual origin of the leading edge of the first constituent interrogation pulse and the time at which the distance circuits reach the condition corresponding to zero distance indication. The time of arrival shall be measured within the partial rise time of the pulse.

3.5.5.3 *Receiver*

3.5.5.3.1 *Frequency of operation.* The receiver centre frequency shall be the transponder frequency appropriate to the assigned DME operating channel (see 3.5.3.3.3).

3.5.5.3.2 *Receiver sensitivity*

‡3.5.5.3.2.1 *DME/N.* The airborne equipment sensitivity shall be sufficient to acquire and provide distance information to the accuracy specified in 3.5.5.4 for the signal power density specified in 3.5.4.1.5.2.

Note.— Although the Standard in 3.5.5.3.2.1 is for DME/N interrogators, the receiver sensitivity is better than that necessary in order to operate with the power density of DME/N transponders given in 3.5.4.1.5.1 in order to assure interoperability with the IA mode of DME/P transponders.

3.5.5.3.2.2 *DME/P.* The airborne equipment sensitivity shall be sufficient to acquire and provide distance information to the accuracy specified in 3.5.5.4.2 and 3.5.5.4.3 for the signal power densities specified in 3.5.4.1.5.3.

‡3.5.5.3.2.3 *DME/N.* The performance of the interrogator shall be maintained when the power density of the transponder signal at the interrogator antenna is between the minimum values given in 3.5.4.1.5 and a maximum of minus 18 dBW/m^2.

3.5.5.3.2.4 *DME/P.* The performance of the interrogator shall be maintained when the power density of the transponder signal at the interrogator antenna is between the minimum values given in 3.5.4.1.5 and a maximum of minus 18 dBW/m^2.

3.5.5.3.3 *Bandwidth*

3.5.5.3.3.1 *DME/N.* The receiver bandwidth shall be sufficient to allow compliance with 3.5.3.1.3, when the input signals are those specified in 3.5.4.1.3.

3.5.5.3.3.2 *DME/P — IA mode.* The receiver bandwidth shall be sufficient to allow compliance with 3.5.3.1.3 when the input signals are those specified in 3.5.4.1.3. The 12-dB bandwidth shall not exceed 2 MHz and the 60-dB bandwidth shall not exceed 10 MHz.

3.5.5.3.3.3 *DME/P — FA mode.* The receiver bandwidth shall be sufficient to allow compliance with 3.5.3.1.3 when the input signals are those specified in 3.5.5.1.3. The 12-dB bandwidth shall not exceed 6 MHz and the 60-dB bandwidth shall not exceed 20 MHz.

3.5.5.3.4 *Interference rejection*

3.5.5.3.4.1 When there is a ratio of desired to undesired co-channel DME signals of at least 8 dB at the input terminals of the airborne receiver, the interrogator shall display distance information and provide unambiguous identification from the stronger signal.

Note.— Co-channel refers to those reply signals that utilize the same frequency and the same pulse pair spacing.

‡3.5.5.3.4.2 *DME/N.* DME signals greater than 900 kHz removed from the desired channel nominal frequency and having amplitudes up to 42 dB above the threshold sensitivity shall be rejected.

3.5.5.3.4.3 *DME/P.* DME signals greater than 900 kHz removed from the desired channel nominal frequency and having amplitudes up to 42 dB above the threshold sensitivity shall be rejected.

3.5.5.3.5 *Decoding*

3.5.5.3.5.1 The interrogator shall include a decoding circuit such that the receiver can be triggered only by pairs of received pulses having pulse duration and pulse spacings appropriate to transponder signals as described in 3.5.4.1.4.

‡3.5.5.3.5.2 *DME/N — Decoder rejection.* A reply pulse pair with a spacing of plus or minus 2 microseconds, or more, from the nominal value and with any signal level up to 42 dB above the receiver sensitivity shall be rejected.

3.5.5.3.5.3 *DME/P — Decoder rejection.* A reply pulse pair with a spacing of plus or minus 2 microseconds, or more, from the nominal value and with any signal level up to 42 dB above the receiver sensitivity shall be rejected.

3.5.5.4 *Accuracy*

‡3.5.5.4.1 *DME/N.* The interrogator shall not contribute more than plus or minus 315 m (plus or minus 0.17 NM) or 0.25 per cent of indicated range, whichever is greater, to the overall system error.

3.5.5.4.2 *DME/P — IA mode.* The interrogator shall not contribute more than plus or minus 30 m (plus or minus 100 ft) to the overall system PFE and not more than plus or minus 15 m (plus or minus 50 ft) to the overall system CMN.

3.5.5.4.3 *DME/P — FA mode*

3.5.5.4.3.1 *Accuracy standard 1.* The interrogator shall not contribute more than plus or minus 15 m (plus or minus 50 ft) to the overall system PFE and not more than plus or minus 10 m (plus or minus 33 ft) to the overall system CMN.

3.5.5.4.3.2 *Accuracy standard 2.* The interrogator shall not contribute more than plus or minus 7 m (plus or minus 23 ft) to the overall system PFE and not more than plus or minus 7 m (plus or minus 23 ft) to the overall system CMN.

Note.— Guidance material on filters to assist in achieving this accuracy is given in Attachment C, 7.3.4.

3.5.5.4.4 *DME/P.* The interrogator shall achieve the accuracy specified in 3.5.3.1.4 with a system efficiency of 50 per cent or more.

Note.— Guidance material on system efficiency is given in Attachment C, 7.1.1.

3.6 Specification for en-route VHF marker beacons (75 MHz)

3.6.1 Equipment

3.6.1.1 *Frequencies.* The emissions of an en-route VHF marker beacon shall have a radio frequency of 75 MHz plus or minus 0.005 per cent.

3.6.1.2 *Characteristics of emissions*

3.6.1.2.1 Radio marker beacons shall radiate an uninterrupted carrier modulated to a depth of not less than 95 per cent or more than 100 per cent. The total harmonic content of the modulation shall not exceed 15 per cent.

3.6.1.2.2 The frequency of the modulating tone shall be 3 000 Hz plus or minus 75 Hz.

3.6.1.2.3 The radiation shall be horizontally polarized.

3.6.1.2.4 *Identification.* If a coded identification is required at a radio marker beacon, the modulating tone shall be keyed so as to transmit dots or dashes or both in an appropriate sequence. The mode of keying shall be such as to provide a dot-and-dash duration together with spacing intervals corresponding to transmission at a rate equivalent to approximately six to ten words per minute. The carrier shall not be interrupted during identification.

3.6.1.2.5 *Coverage and radiation pattern*

Note.— The coverage and radiation pattern of marker beacons will ordinarily be established by Contracting States on the basis of operational requirements, taking into account recommendations of regional meetings.

The most desirable radiation pattern would be one that:

a) in the case of fan marker beacons, results in lamp operation only when the aircraft is within a rectangular parallelepiped, symmetrical about the vertical line through the marker beacon and with the major and minor axes adjusted in accordance with the flight path served;

b) in the case of a Z marker beacon, results in lamp operation only when the aircraft is within a cylinder, the axis of which is the vertical line through the marker beacons.

In practice, the production of such patterns is impracticable and a compromise radiation pattern is necessary. In Attachment C, antenna systems currently in use and which have proved generally satisfactory are described for guidance. Such designs and any new designs providing a closer approximation to the most desirable radiation pattern outlined above will normally meet operational requirements.

3.6.1.2.6 *Determination of coverage.* The limits of coverage of marker beacons shall be determined on the basis of the field strength specified in 3.1.7.3.2.

3.6.1.2.7 *Radiation pattern.* **Recommendation.—** *The radiation pattern of a marker beacon normally should be such that the polar axis is vertical, and the field strength in the pattern is symmetrical about the polar axis in the plane or planes containing the flight paths for which the marker beacon is intended.*

Note.— Difficulty in siting certain marker beacons may make it necessary to accept a polar axis that is not vertical.

3.6.1.3 *Monitoring.* **Recommendation.—** *For each marker beacon, suitable monitoring equipment should be provided which will show at an appropriate location:*

a) a decrease in radiated carrier power below 50 per cent of normal;

b) a decrease of modulation depth below 70 per cent;

c) a failure of keying.

3.7 Requirements for the Global Navigation Satellite System (GNSS)

3.7.1 Definitions

Advanced receiver autonomous integrity monitoring (ARAIM). An ABAS function making use of ISD.

Aircraft-based augmentation system (ABAS). An augmentation system that augments and/or integrates the information obtained from the other GNSS elements with information available on board the aircraft.

Alert. An indication provided to other aircraft systems or annunciation to the pilot to identify that an operating parameter of a navigation system is out of tolerance.

Alert limit. For a given parameter measurement, the error tolerance not to be exceeded without issuing an alert.

Antenna port. A point where the received signal power is specified. For an active antenna, the antenna port is a fictitious point between the antenna elements and the antenna pre-amplifier. For a passive antenna, the antenna port is the output of the antenna itself.

Axial ratio. The ratio, expressed in decibels, between the maximum output power and the minimum output power of an antenna to an incident linearly polarized wave as the polarization orientation is varied over all directions perpendicular to the direction of propagation.

BeiDou Navigation Satellite System (BDS). The satellite navigation system operated by China.

BDS Open Service (BDS OS). The specified level of positioning, velocity and timing accuracy that is available to any BDS user on a continuous, worldwide basis.

Channel of standard accuracy (CSA). The specified level of positioning, velocity and timing accuracy that is available to any GLONASS user on a continuous, worldwide basis.

Core satellite constellation(s). The core satellite constellations are GPS, GLONASS, Galileo and BDS.

***Galileo*.** The satellite navigation system operated by the European Union and its Member States.

Galileo Open Service (Galileo OS). The specified level of positioning, velocity and timing accuracy that is available to any Galileo user on a continuous, worldwide basis.

Global navigation satellite system (GNSS). A worldwide position and time determination system that includes one or more satellite constellations, aircraft receivers and system integrity monitoring, augmented as necessary to support the required navigation performance for the intended operation.

Global navigation satellite system (GLONASS). The satellite navigation system operated by the Russian Federation.

***Global positioning system (GPS*).** The satellite navigation system operated by the United States.

GNSS position error. The difference between the true position and the position determined by the GNSS receiver.

Ground-based augmentation system (GBAS). An augmentation system in which the user receives augmentation information directly from a ground-based transmitter.

Ground-based regional augmentation system (GRAS). An augmentation system in which the user receives augmentation information directly from one of a group of ground-based transmitters covering a region.

Integrity. A measure of the trust that can be placed in the correctness of the information supplied by the total system. Integrity includes the ability of a system to provide timely and valid warnings to the user (alerts).

Integrity support data (ISD). A set of parameters that characterize the signal-in-space (SIS) integrity performance for each specific core satellite constellation and ARAIM service type.

Integrity support message (ISM). A dedicated core satellite constellation broadcast navigation message that contains ISD parameters which may improve ARAIM performance compared to the default ISD values.

Note.— The broadcast ISD may be contained in one or more ISMs.

Ionosphere-free pseudo-range. A pseudo-range in which the first order ionosphere effect on signal propagation has been removed by a linear combination of pseudo-range measurements from signals on two distinct frequencies from the same satellite.

ISM generator (ISMG). Entity which determines the values of the ISD parameters transmitted in the ISM for ARAIM for a given core satellite constellation.

Pseudo-range. The difference between the time of transmission by a satellite and reception by a GNSS receiver multiplied by the speed of light in a vacuum, including bias due to the difference between a GNSS receiver and satellite time reference.

Satellite-based augmentation system (SBAS). A wide coverage augmentation system in which the user receives augmentation information from a satellite-based transmitter.

Standard positioning service (SPS). The specified level of positioning, velocity and timing accuracy that is available to any global positioning system (GPS) user on a continuous, worldwide basis.

Time-to-alert. The maximum allowable time elapsed from the onset of the navigation system being out of tolerance until the equipment enunciates the alert.

3.7.2 General

3.7.2.1 *Functions*

3.7.2.1.1 The GNSS shall provide position and time data to the aircraft.

Note.— These data are derived from pseudo-range measurements between an aircraft equipped with a GNSS receiver and various signal sources on satellites or on the ground.

3.7.2.2 *GNSS elements*

3.7.2.2.1 The GNSS navigation service shall be provided using various combinations of the following elements installed on the ground, on satellites and/or on board the aircraft:

a) Global Positioning System (GPS) that provides the Standard Positioning Service (SPS) as defined in 3.7.3.1.1;

b) Global Navigation Satellite System (GLONASS) that provides the Channel of Standard Accuracy (CSA) as defined in 3.7.3.1.2;

c) Galileo that provides a single- and dual-frequency Open Service (OS) as defined in 3.7.3.1.3;

d) BeiDou Navigation Satellite System (BDS) that provides the BDS Open Service (BDS OS) as defined in 3.7.3.1.4;

e) aircraft-based augmentation system (ABAS) as defined in 3.7.3.3;

f) satellite-based augmentation system (SBAS) as defined in 3.7.3.4;

g) ground-based augmentation system (GBAS) as defined in 3.7.3.5;

h) ground-based regional augmentation system (GRAS) as defined in 3.7.3.5; and

i) aircraft GNSS receiver as defined in 3.7.3.6.

Note.— In order to provide system integrity monitoring, the use of an augmentation as specified in 3.7.2.2.1 e), f), g) or h) is required to meet the performance requirements of 3.7.2.4.

3.7.2.3 *Space and time reference*

3.7.2.3.1 *Space reference*. The position information provided by the GNSS to the user shall be expressed in terms of the World Geodetic System — 1984 (WGS-84) geodetic reference datum.

Note 1.— SARPs for WGS-84 are contained in Annex 4, Chapter 2, Annex 11, Chapter 2, Annex 14, Volumes I and II, Chapter 1 and Annex 15, Chapter 1.

Note 2.— If GNSS elements using other than WGS-84 coordinates are employed, appropriate conversion parameters are to be applied. If the difference between a GNSS geodetic reference and WGS-84 is negligible for aviation (e.g. of the order of a few centimetres) and a bounding of the maximum difference is specified, then no conversion parameters need to be applied.

3.7.2.3.2 *Time reference*. The time data provided by the GNSS to the user shall be expressed in a time scale that takes the Coordinated Universal Time (UTC) as reference.

3.7.2.4 *Signal-in-space performance*

3.7.2.4.1 The combination of GNSS elements and a fault-free GNSS user receiver shall meet the signal-in-space requirements defined in Table 3.7.2.4-1 (located at the end of 3.7).

Note 1.— The concept of a fault-free user receiver is applied only as a means of defining the performance of combinations of different GNSS elements. The fault-free receiver is assumed to be a receiver with nominal accuracy and time-to-alert performance. Such a receiver is assumed to have no failures that affect the integrity, availability and continuity performance.

Note 2.— For GBAS approach service (as defined in Attachment D, 7.1.2.1) intended to support approach and landing operations using Category III minima, performance requirements are defined that apply in addition to the signal-in-space requirements defined in Table 3.7.2.4-1.

3.7.3 GNSS elements specifications

3.7.3.1 *Core constellations*

3.7.3.1.1 *GPS Standard Positioning Service (SPS) (L1, L5)*

Note.— Unless otherwise specified, the performance standards in 3.7.3.1.1.1 to 3.7.3.1.1.7 below apply to single-frequency ranging, using the L1 coarse acquisition (C/A) code signal or the L5 signal (I5 code or Q5 code), and to dual-frequency ranging using the combination of L1 and L5 signals. In addition, they only apply to current and consistent ephemeris and clock data within the respective curve fit intervals.

3.7.3.1.1.1 *Space and control segment accuracy*

Note.— The following accuracy standards apply only for healthy GPS SPS signal-in-space (SIS), during normal operations as described in Attachment D, 4.1.1.9, and do not include atmospheric or receiver errors as described in Attachment D, 4.1.1.2. GPS SPS SIS health conditions can be found in the United States Department of Defense, Global Positioning System – Standard Positioning Service – Performance Standard*, 5th Edition, April 2020 (hereinafter referred to as "GPS SPS PS"), 2.3.2.*

3.7.3.1.1.1.1 *Positioning accuracy*. The single-frequency L1 C/A code position errors shall not exceed the following limits:

	Global average 95% of the time	Worst site 95% of the time
Horizontal position error	8 m	15 m
Vertical position error	13 m	33 m

3.7.3.1.1.1.2 *Time transfer accuracy*. The GPS SPS time transfer errors shall not exceed 30 nanoseconds 95 per cent of the time.

3.7.3.1.1.1.3 *Range domain accuracy*. The range domain error shall not exceed the following limits during normal operations over all ages of data:

a) range error of any satellite — 30 m with reliability specified in 3.7.3.1.1.3;

b) 95th percentile range rate error of any satellite — 0.006 m per second (global average);

c) 95th percentile range acceleration error of any satellite — 0.002 m per second-squared (global average);

d) 95th percentile range error for any satellite7.0 m (global average); and

e) 95th percentile range error across all satellites occupying defined slots in the constellation — 2.0 m (global average).

3.7.3.1.1.2 *Availability*. The availability for single-frequency L1 C/A code users shall be as follows:

≥99 per cent horizontal service availability, average location (15 m 95 per cent threshold)

≥99 per cent vertical service availability, average location (33 m 95 per cent threshold)

≥90 per cent horizontal service availability, worst-case location (15 m 95 per cent threshold)

≥90 per cent vertical service availability, worst-case location (33 m 95 per cent threshold)

3.7.3.1.1.3 *Reliability*. The GPS SPS reliability relative to the 30 m user range error (URE) statistic in 3.7.3.1.1.1.3 a) shall be within the following limits:

a) reliability — at least 99.94 per cent (global average); and

b) reliability — at least 99.79 per cent (worst single point average).

3.7.3.1.1.4 *Probability of major service failure.*

Note.— The different alert indications are described in the GPS SPS PS, 2.3.4.

3.7.3.1.1.4.1 *Satellite major service failure onset rate (R_{sat}).* The probability that the instantaneous user range error (URE) of any satellite will exceed 4.42 times the relevant integrity assured user range accuracy (IAURA) value broadcast by that satellite without an alert received at the user receiver antenna within 10 seconds shall not exceed 1×10^{-5} per hour.

3.7.3.1.1.4.2 *Probability of a satellite major service failure condition (P_{sat}).* The probability at any given instant that the instantaneous URE of any satellite will exceed 4.42 times the relevant IAURA value broadcast by that satellite without an alert received at the user receiver antenna within 10 seconds shall not exceed 1×10^{-5}.

3.7.3.1.1.4.3 *Probability of a common-cause major service failure condition (P_{const})*. The probability at any given instant that the instantaneous URE of two or more satellites will exceed 4.42 times the relevant IAURA broadcast by each satellite due to a common fault without an alert received at the user receiver antenna within 10 seconds shall not exceed 1×10^{-8}.

3.7.3.1.1.5 *Continuity.* The probability of losing L1 C/A SIS availability from a slot of the 24-slot constellation due to unscheduled interruption shall not exceed 2×10^{-4} per hour.

3.7.3.1.1.6 *Coverage.* The GPS SPS shall cover the surface of the earth up to an altitude of 3 000 kilometres.

Note.— Guidance material on GPS accuracy, availability, reliability , major service failure, continuity and coverage is given in Attachment D, 4.1.1. Additional information is given in the GPS SPS PS.

3.7.3.1.1.7 *Constellation availability*. The probability that 21 or more of the 24 slots will be occupied by either a satellite broadcasting a trackable and healthy L1 C/A signal in the baseline slot configuration or by a pair of satellites each broadcasting a trackable and healthy L1 C/A signal in the expanded slot configurations, shall be at least 0.98. The probability that 20 or more of the 24 slots will be occupied by either a satellite broadcasting a trackable and healthy L1 C/A signal in the baseline slot configuration or by a pair of satellites each broadcasting a trackable and healthy L1 C/A signal in the expanded slot configurations, shall be at least 0.99999.

Note.— There is currently no corresponding standard for the L5 signal or for the combined L1 C/A and L5 signals since older satellites in the constellation do not have the capability to broadcast an L5 signal.

3.7.3.1.1.8 *Radio frequency (RF) characteristics*

Note.— Detailed RF characteristics are specified in NAVSTAR GPS Space Segment/Navigation User Segment Interfaces, IS No. IS-GPS-200, Rev K (hereinafter referred to as "IS-GPS-200K") for L1 and NAVSTAR GPS Space Segment/User Segment L5 Interfaces, IS No. IS-GPS-705, Rev F (hereinafter referred to as "IS-GPS-705F"); selected characteristics are specified in Appendix B, 3.1.1.1.1 for L1 and Appendix B, 3.1.1.1.4 for L5.

3.7.3.1.1.8.1 *L1 carrier frequency*. Each GPS satellite shall broadcast an SPS ranging signal at the carrier frequency of 1 575.42 MHz (GPS L1) using code division multiple access (CDMA).

3.7.3.1.1.8.2 *L5 carrier frequency*. Some GPS satellites shall, in addition, broadcast an SPS ranging signal at the carrier frequency of 1 176.45 MHz (GPS L5) using CDMA.

3.7.3.1.1.8.3 *Signal spectrum*. The L1 and L5 signal power shall be contained within ±12 MHz bands centred on the respective carrier frequencies: 1 563.42 –1 587.42 MHz for L1 and 1 164.45 – 1 188.45 for L5.

3.7.3.1.1.8.4 *Polarization*. The transmitted L1 and L5 RF signals shall be right-hand circularly polarized.

3.7.3.1.1.8.5 *Signal structure*. The L1 C/A signal shall consist of one carrier component. The L5 signal shall consist of two carrier components: an in-phase component (I5) and a quadrature component lagging the in-phase component by 90 degrees (Q5).

3.7.3.1.1.8.6 *Signal power level*. Each GPS satellite shall broadcast SPS navigation signals with sufficient power such that, at all unobstructed locations near the ground from which the satellite is observed at an elevation angle of 5 degrees or higher, the level of the received RF signal at the antenna port of a 3 dBi linearly-polarized antenna is within the following ranges for all antenna orientations orthogonal to the direction of propagation: –158.5 dBW to –153 dBW for L1 C/A and –157.9 dBW to –150 dBW for each of the I5 and Q5 channels on L5.

3.7.3.1.1.8.7 *Modulation*. Each SPS L1 and L5 signal shall be bipolar phase shift key (BPSK) modulated with a pseudo random noise (PRN) code. The C/A code on L1 shall have a rate of 1.023 megachips per second. The codes on I5 and Q5 shall have a rate of 10.23 megachips per second.

3.7.3.1.1.8.7.1 The C/A, I5, and Q5 code sequences shall be repeated each millisecond.

3.7.3.1.1.8.7.2 The transmitted code sequence on L1 shall be the Modulo-2 addition of a 50-bit-per-second legacy navigation (LNAV) message and the C/A code.

3.7.3.1.1.8.7.3 The transmitted code sequence on I5 shall be the Modulo-2 addition of a 50-bit-per-second civil navigation (CNAV) message (rate 1/2 convolution encoded into a 100 symbol per second stream), a 10-bit Neuman-Hofman overlay code clocked at 1 kbps, and the I5 code. The transmitted code sequence on Q5 shall be the Modulo-2 addition of a 20-bit Neuman-Hofman overlay code clocked at 1 kbps and the Q5 code.

Note.— The Q5 signal is not modulated with navigation data.

3.7.3.1.1.8.7.4 *Signal coherence*. All transmitted signals for any satellite shall be coherently derived from the same on-board frequency standard. On the L5 channel, the chip transitions of the two modulating signals, I5 and Q5, shall be such that the average time difference between them does not exceed 10 nanoseconds.

3.7.3.1.1.9 *GPS time*. GPS time shall be referenced to UTC (as maintained by the U.S. Naval Observatory).

3.7.3.1.1.10 *Coordinate system*. The GPS coordinate system shall be WGS-84.

3.7.3.1.1.11 *Navigation information*. The navigation data transmitted by the satellites on L1 and L5 shall include the necessary information to determine:

a) satellite time of transmission;

b) satellite position;

c) satellite health;

d) satellite clock correction;

e) propagation delay effects;

f) time transfer to UTC; and

g) constellation status.

Note.— Structure and contents of data are specified in Appendix B, 3.1.1.1.2 and 3.1.1.1.3 for L1, and 3.1.1.1.5 and 3.1.1.1.6 for L5.

3.7.3.1.2 *GLONASS Channel of Standard Accuracy (CSA) (L1/L3)*

Note.— The GLONASS signals for CSA are broadcast in two frequency bands identified as L1 and L3. In the L1 band, two types of signals are broadcast: L1OF with frequency division multiple access (FDMA) and L1OC with code division multiple access (CDMA). In the L3 band, only CDMA signals (L3OC) are broadcast. Except where otherwise specified, the term GLONASS refers to all satellites in the constellation transmitting either FDMA or CDMA signals.

3.7.3.1.2.1 *Space and control segment accuracy*

Note.— The single-frequency accuracy Standards do not include atmospheric or receiver errors; ionosphere errors are included for dual-frequency combinations, as described in Attachment D, 4.1.2.2.

3.7.3.1.2.1.1 *Positioning accuracy*. The GLONASS CSA position errors shall not exceed the following limits:

Signals	L1OF	L1OC	L3OC	L1OF - L3OC	L1OC - L3OC
Global average 95% of the time:					
Horizontal position error	5 m	5 m	5 m	5 m	5 m
Vertical position error	9 m	9 m	9 m	9 m	9 m
Worst site 95% of the time:					
Horizontal position error	12 m	12 m	12 m	12 m	12 m
Vertical position error	25 m	25 m	25 m	25 m	25 m

3.7.3.1.2.1.2 *Time transfer accuracy*. The GLONASS CSA time transfer errors shall not exceed the following 95 per cent of the time:

Signals	L1OF	L1OC	L3OC	L1OF - L3OC	L1OC - L3OC
	40 ns	40 ns	40 ns	40 ns	40 ns

3.7.3.1.2.1.3 *Range domain accuracy*. The range domain error shall not exceed the following limits:

Signals	L1OF	L1OC	L3OC	L1OF - L3OC	L1OC - L3OC
Range error of any satellite with reliability specified in 3.7.3.1.2.3	18 m	18 m	18 m	18 m	18 m
95th percentile range error of any satellite	11.7 m	11.7 m	11.7 m	11.7 m	11.7 m
95th percentile range error over all satellites	7.8 m	7.8 m	7.8 m	7.8 m	7.8 m
95th percentile range rate error of any satellite	0.014 m/s	0.014 m/s	0.014 m/s	0.014 m/s	0.014 m/s
95th percentile range acceleration error of any satellite	0.005 m/s^2	0.005 m/s^2	0.005 m/s^2	0.005 m/s^2	0.005 m/s^2

3.7.3.1.2.2 *Availability*. The GLONASS CSA availability shall be as follows:

Signals	L1OF	L1OC	L3OC	L1OF - L3OC	L1OC - L3OC
Average location:					
Horizontal service availability	99%, (12 m 95% threshold)	99%, (12 m 95% threshold)	99%, (12 m 95% threshold)	99%, (12 m 95% threshold)	99%, (12 m 95% threshold)
Vertical service availability	99%, (25 m 95% threshold)	99%, (25 m 95% threshold)	99%, (25 m 95% threshold)	99%, (25 m 95% threshold)	99%, (25 m 95% threshold)
Worst-case location:					
Horizontal service availability	90%, (12 m 95% threshold)	90%, (12 m 95% threshold)	90%, (12 m 95% threshold)	90%, (12 m 95% threshold)	90%, (12 m 95% threshold)
Vertical service availability	90%, (25 m 95% threshold	90%, (25 m 95% threshold	90%, (25 m 95% threshold	90%, (25 m 95% threshold	90%, (25 m 95% threshold

3.7.3.1.2.3 *Reliability*. The GLONASS CSA reliability shall be within the following limits:

Signals	L1OF	L1OC	L3OC	L1OF – L3OC	L1OC – L3OC
Global average	99.37%	99.37%	99.37%	99.37%	99.37%
Worst single point average	99.14%	99.14%	99.14%	99.14%	99.14%

3.7.3.1.2.4 *Probability of major service failure.* The probability that the user range error (URE) of any satellite will exceed the following tolerance without an alert received at the user receiver antenna within 10 seconds shall not exceed the following probability:

Signals	L1OF	L1OC	L3OC	L1OF – L3OC	L1OC – L3OC
Single satellite failure (P_{sat})	1×10^{-4}, (70 m threshold)	1×10^{-4}, (70 m threshold)	1×10^{-4}, (70 m threshold)	1×10^{-4}, (70 m threshold)	1×10^{-4}, (70 m threshold)

3.7.3.1.2.5 *Probability of constellation fault.* The probability that the user range error (URE) of more than one satellite will exceed the following tolerance simultaneously without an alert received at the user receiver antenna within 10 seconds shall not exceed the following probability:

Signals	L1OF	L1OC	L3OC	L1OF – L3OC	L1OC – L3OC
Constellation fault (P_{const})	1×10^{-4}, (70 m threshold)	1×10^{-4}, (70 m threshold)	1×10^{-4}, (70 m threshold)	1×10^{-4}, (70 m threshold)	1×10^{-4}, (70 m threshold)

3.7.3.1.2.6 *Continuity.* The probability of losing GLONASS CSA healthy signal availability from a slot of the nominal 24-slot constellation due to unscheduled interruption shall not exceed the following limit:

Signals	L1OF	L1OC	L3OC	L1OF – L3OC	L1OC – L3OC
Signal continuity	2×10^{-3}	2×10^{-3}	2×10^{-3}	2×10^{-3}	2×10^{-3}

3.7.3.1.2.7 *Coverage*. The GLONASS CSA shall cover the surface of the earth up to an altitude of 2 000 km.

Note.— Guidance material on GLONASS accuracy, availability, reliability and coverage is given in Attachment D, 4.1.2.

3.7.3.1.2.8 *L1OF RF characteristics*

Note.— Detailed RF characteristics are specified in Appendix B, 3.1.2.1.1.

3.7.3.1.2.8.1 *Carrier frequency.* Each GLONASS satellite shall broadcast CSA navigation signal at its own carrier frequency in the L1 (1.6 GHz) frequency band using frequency division multiple access (FDMA).

Note 1.— GLONASS satellites may have the same carrier frequency but in this case they are located in antipodal slots of the same orbital plane.

Note 2.— GLONASS-M satellites will broadcast an additional ranging code at carrier frequencies in the L2 (1.2 GHz) frequency band using FDMA.

3.7.3.1.2.8.2 *Signal spectrum.* GLONASS CSA signal power shall be contained within a ±5.75 MHz band centred on each GLONASS carrier frequency.

3.7.3.1.2.8.3 *Polarization*. The transmitted RF signal shall be right-hand circularly polarized.

3.7.3.1.2.8.4 *Signal power level*. Each GLONASS satellite shall broadcast CSA navigation signals with sufficient power such that, at all unobstructed locations near the ground from which the satellite is observed at an elevation angle of 5 degrees or higher, the level of the received RF signal at the antenna port of a 3 dBi linearly polarized antenna is within the range of –161 dBW to –155.2 dBW for all antenna orientations orthogonal to the direction of propagation.

Note 1.— The power limit of 155.2 dBW is based on the predetermined characteristics of a user antenna, atmospheric losses of 0.5 dB and an error of an angular position of a satellite that does not exceed one degree (in the direction causing the signal level to increase).

Note 2.— GLONASS-M satellites will also broadcast a ranging code on L2 with sufficient power such that, at all unobstructed locations near the ground from which the satellite is observed at an elevation angle of 5 degrees or higher, the level of the received RF signal at the antenna port of a 3 dBi linearly polarized antenna is not less then –167 dBW for all antenna orientations orthogonal to the direction of propagation.

3.7.3.1.2.8.5 *Modulation*

3.7.3.1.2.8.5.1 Each GLONASS satellite shall transmit at its carrier frequency the navigation RF signal using a BPSK-modulated binary train. The phase shift keying of the carrier shall be performed at π-radians with the maximum error ±0.2 radian. The pseudo-random code sequence shall be repeated each millisecond.

3.7.3.1.2.8.5.2 The modulating navigation signal shall be generated by the Modulo-2 addition of the following three binary signals:

a) ranging code transmitted at 511 kbits/s;

b) navigation message transmitted at 50 bits/s; and

c) 100 Hz auxiliary meander sequence.

3.7.3.1.2.9 *L3OC RF characteristics*

Note.— Detailed RF characteristics are specified in Appendix B, 3.1.2.1.5.

3.7.3.1.2.9.1 *Carrier frequency.* GLONASS L3OC navigation signals shall be broadcast at the carrier frequency of 1 202.025 MHz using code division multiple access (CDMA).

3.7.3.1.2.9.2 *Signal spectrum.* GLONASS CSA L3OC signal power shall be contained within the 1 190.35 – 1 212.23 MHz band.

3.7.3.1.2.9.3 *Polarization*. The transmitted L3OC signal shall be right-hand circularly polarized.

3.7.3.1.2.9.4 *Signal power level*. GLONASS L3OC navigation signals shall be broadcast with sufficient power such that, at all unobstructed locations near the ground from which the satellite is observed at an elevation angle of 5 degrees or higher, the level of the received RF signal at the antenna port of a 3 dBi linearly polarized antenna is within the range of –158.5 dBW to –155.2 dBW for all antenna orientations orthogonal to the direction of propagation.

Note.— The power limit of 155.2 dBW is based on the predetermined characteristics of a user antenna, atmospheric losses of 0.5 dB and an error of an angular position of a satellite that does not exceed one degree (in the direction causing the signal level to increase).

3.7.3.1.2.9.5 *Modulation*

Note.— Additional information concerning the modulation is given in the GLONASS CDMA ICD Open Service Navigation Signal in L3 frequency band (Edition 1.0), dated 2016 (hereinafter referred to as "GLONASS CDMA ICD L3 band").

3.7.3.1.2.9.5.1 GLONASS L3OC navigation signals shall contain two components using the same BPSK(10)-modulated binary train: an in-phase data component and a quadrature-phase pilot component identified as L3OCd and L3OCp, respectively. The pilot component leads the data component by $\pi/2$ radians.

3.7.3.1.2.9.5.2 The L3OCd signal component shall be generated by the Modulo-2 addition of the following three binary signals:

a) ranging code with length N=10230, period T=1 ms, clock rate 10.23 MHz;

b) 100 bits/s navigation message encoded using a convolutional encoder with constraint length 7 and code rate 1/2 to yield 200 symbols per second; and

c) overlay code "00010" with period T=5 ms.

3.7.3.1.2.9.5.3 The L3OCp signal component shall be generated by the Modulo-2 addition of the following two binary signals:

a) ranging code with length N=10230, period T=1 ms, clock rate 10.23 MHz; and

b) overlay code "0000110101" with period T=10 ms.

3.7.3.1.2.10 *L1OC RF characteristics*

Note.— Detailed RF characteristics are specified in Appendix B, 3.1.2.1.5.

3.7.3.1.2.10.1 *Carrier frequency.* GLONASS L1OC navigation signals shall be broadcast at the carrier frequency of 1600.995 MHz using code division multiple access (CDMA).

3.7.3.1.2.10.2 *Signal spectrum.* GLONASS CSA L1OC signal power shall be contained within the 1 592.9 – 1 610 MHz band.

3.7.3.1.2.10.3 *Polarization*. The transmitted L1OC signal shall be right-hand circularly polarized.

3.7.3.1.2.10.4 *Signal power level*. GLONASS L1OC navigation signals shall be broadcast with sufficient power such that, at all unobstructed locations near the ground from which the satellite is observed at an elevation angle of 5 degrees or higher, the level of the received RF signal at the antenna port of a 3 dBi linearly polarized antenna is within the range of –158.5 dBW to –155.2 dBW for all antenna orientations orthogonal to the direction of propagation.

Note.— The power limit of 155.2 dBW is based on the predetermined characteristics of a user antenna, atmospheric losses of 0.5 dB and an error of an angular position of a satellite that does not exceed one degree (in the direction causing the signal level to increase).

3.7.3.1.2.10.5 *Modulation*

Note.— Additional information concerning the modulation is given in the GLONASS CDMA ICD Open Service Navigation Signal in L1 frequency band (Edition 1.0), dated 2016 (hereinafter referred to as "GLONASS CDMA ICD L1 band").

3.7.3.1.2.10.5.1 GLONASS L1OC navigation signals shall contain two components: a data component and a pilot component identified as L1OCd and L1OCp, respectively. Both components shall be at one phase quadrature using time-division multiplexing. L1OCd shall be modulated using binary phase-shift keying BPSK(1), while L1OCp shall be modulated by binary offset carrier BOC(1,1) modulation.

3.7.3.1.2.10.5.2 The L1OCd signal component shall be generated by the Modulo-2 addition of the following three binary signals:

a) ranging code with length N=1023, period T=2 ms, clock rate 0.5115 MHz;

b) 125 bits/s navigation message encoded using a convolutional encoder with constraint length 7 and code rate 1/2 to yield 250 symbols per second; and

c) overlay code "01" with period T=4 ms.

3.7.3.1.2.10.5.3 The L1OCp signal component shall be generated by the Modulo-2 addition of the following two binary signals:

a) ranging code with length N=4092, period T=8 ms, clock rate 0.5115 MHz; and

b) meander sequence "0101" with clock rate 2.046 MHz.

3.7.3.1.2.11 *GLONASS time.* GLONASS time shall be referenced to UTC(SU) (as maintained by the National Time Service of Russia).

3.7.3.1.2.12 *Coordinate system*. The GLONASS coordinate system shall be PZ-90.

Note.— Conversion from the PZ-90 coordinate system used by GLONASS to the WGS-84 coordinates is defined in Appendix B, 3.1.2.5.2.

3.7.3.1.2.13 *Navigation information.* The navigation data transmitted by the satellite shall include the necessary information to determine:

a) satellite time of transmission;

b) satellite position;

c) satellite health;

d) satellite clock correction;

e) time transfer to UTC;

f) constellation status;

g) ionospheric delay effects (L1OC, L3OC only); and

h) satellite orientation in umbra (L1OC, L3OC only).

Note.— Structure and contents of data are specified in Appendix B, 3.1.2.1.2 and 3.1.2.1.3, respectively.

3.7.3.1.3 *Galileo Open Service (Galileo OS) (E1, E5)*

Note 1.— The Galileo signals for Galileo OS are broadcast in two frequency bands identified as E1 and E5. In the E5 band, two types of signals are broadcast with code division multiple access (CDMA): E5a and E5b. For aviation purposes, the Galileo single-frequency OS is based on either E1 or E5a signals; and the Galileo dual-frequency OS is based on a combination of E1 and E5a signals.

Note 2.— The E5b signal component is described in this Annex since it is a subset of the overall Galileo signal modulated on the E5 frequency carrier. However, there is currently no intention that the E5b signal be used by aviation receivers.

Note 3.— The following performance standards only apply if "healthy" signals-in-space are used (see Appendix B, 3.1.3.1.3.4).

Note 4.— The following performance standards do not include atmospheric or receiver errors such as ionosphere, troposphere, interference, receiver noise or multipath.

Note 5.— Guidance material on Galileo OS accuracy, availability, continuity, probability of satellite/constellation failure and coverage, is given in Attachment D, 4.1.3.

3.7.3.1.3.1 *Positioning accuracy.* The Galileo position errors shall not exceed the following limits*:*

Signals	E1	E5a	E1-E5a
Global average 95% of the time:			
Horizontal position error over a measurement period of 30 days	5 m	5 m	5 m
Vertical position error over a measurement period of 30 days	8 m	8 m	8 m
Worst site 95% of the time:			
Horizontal position error over a measurement period of 30 days	10 m	10 m	10 m
Vertical position error over a measurement period of 30 days	16 m	16 m	16 m

3.7.3.1.3.2 *Time determination accuracy.* The Galileo UTC time determination error shall not exceed 30 nanoseconds, 95 per cent of the time.

3.7.3.1.3.3 *Range domain accuracy.* The Galileo range domain error shall not exceed the following limits:

Signals	E1	E5a	E1-E5a
99.9th percentile range error of any satellite (worst-case location)	20 m	20 m	20 m
99.9th percentile range error of any satellite (global average)	10 m	10 m	10 m
95th percentile range error of any satellite (global average)	7 m	7 m	7 m
95th percentile range error over all satellites (global average)	2 m	2 m	2 m
95th percentile range rate error of any satellite (global average)	5 mm/s	5 mm/s	5 mm/s

Note 1.— The ranging accuracy considers only healthy Galileo OS SIS above a minimum elevation angle of 5 degrees.

Note 2.— Single-frequency (E1 or E5a) ranging accuracy includes broadcast group delay (BGD) errors. BGD definition is specified in Attachment D, 4.1.3.3.2.

3.7.3.1.3.4 *Availability.* The Galileo OS availability shall be as follows:

Signals	E1	E5a	E1-E5a
Average location:			
Horizontal service availability over a measurement period of 30 days	99% (10 m 95% threshold)	99% (10 m 95% threshold)	99% (10 m 95% threshold)
Vertical service availability over a measurement period of 30 days	99% (16 m 95% threshold)	99% (16 m 95% threshold)	99% (16 m 95% threshold)
Worst-case location:			
Horizontal service availability over a measurement period of 30 days	90% (10 m 95% threshold)	90% (10 m 95% threshold)	90% (10 m 95% threshold)
Vertical service availability over a measurement period of 30 days	90% (16 m 95% threshold)	90% (16 m 95% threshold)	90% (16 m 95% threshold)

3.7.3.1.3.5 Galileo integrity support data

Note.— Galileo integrity support data is specified for measurements derived from Galileo signals received above a 5-degree elevation angle.

3.7.3.1.3.5.1 *Probability of satellite failure (P_{sat}).* The probability that one satellite of Galileo operational core constellation provides an instantaneous SIS range error higher than k times the Galileo user range accuracy (Galileo URA) and no notification is given to the user, shall not exceed 3×10^{-5}.

Note 1.— A change in the SIS health status is notified through the flags contained in the navigation message. The mapping between Galileo SIS status and flags contained in the navigation data message is specified in Appendix B, 3.1.3.1.3.4.

Note 2.— Galileo URA corresponds either to $\sigma_{URA,DF}$ for dual-frequency users or to $\sigma_{URA,SF}$ for single-frequency users, as specified in 3.7.1.3.5.3 and 3.7.1.3.5.4.

Note 3.— P_{sat} definition is further specified in Attachment D, 4.1.3.6.1.

3.7.3.1.3.5.2 *Probability of constellation failure (P_{const}).* The probability that, due to a common cause, any subset of two or more satellites within Galileo operational constellation provides an instantaneous SIS range error higher than *k* times the Galileo URA and no notification is given to the user, shall not exceed 2×10^{-4}.

Note 1.— A change in the SIS health status is notified through the flags contained in the navigation message. The mapping between Galileo SIS status and flags contained in the navigation data message is specified in Appendix B, 3.1.3.1.3.4.

Note 2.— Galileo URA corresponds either to $\sigma_{URA,DF}$ for dual-frequency users or to $\sigma_{URA,SF}$ for single-frequency users, as specified in 3.7.1.3.5.3 and 3.7.1.3.5.4.

Note 3.— P_{const} definition is further specified in Attachment D, 4.1.3.6.2.

3.7.3.1.3.5.3 *Galileo URA for dual-frequency ($\sigma_{URA,DF}$).* Galileo $\sigma_{URA,DF}$ shall not exceed 6 m.

Note 1.— $\sigma_{URA,DF}$ applies to a dual-frequency E1-E5a signal combination.

Note 2.— $\sigma_{URA,DF}$ is defined in Attachment D, 4.1.3.6.3.

3.7.3.1.3.5.4 *Galileo URA for single-frequency ($\sigma_{URA,SF}$).* Galileo $\sigma_{URA,SF}$ shall not exceed 6.5 m for E1 and 7.5 m for E5a.

Note.— $\sigma_{URA,SF}$ is defined in Attachment D, 4.1.3.6.4.

3.7.3.1.3.5.5 Galileo σ_{BGD}. Galileo σ_{BGD} shall not exceed 2.5 m for both E1 and E5a.

Note.— Galileo σ_{BGD} is defined in Attachment D, 4.1.3.6.5.

3.7.3.1.3.5.6 *Galileo fault rates R_{sat} and $R_{const.}$* Galileo R_{sat} shall not exceed 2×10^{-5}/h and Galileo R_{const} shall not exceed 1×10^{-4}/h.

Note.— Fault rates are defined in Appendix B, 3.4.1.1.2.

3.7.3.1.3.6 *Continuity.* The probability of losing Galileo OS SIS availability from a slot of the nominal 24-slot constellation due to unscheduled interruption, shall not exceed the following limit:

Signals	E1	E5a	E1-E5a
Continuity	4×10^{-4} per hour	4×10^{-4} per hour	4×10^{-4} per hour

3.7.3.1.3.7 *Coverage*. The Galileo OS shall cover the surface of the earth up to an altitude of 30.48 km.

3.7.3.1.3.8 *Radio frequency (RF) characteristics.* All Galileo satellites shall broadcast Galileo OS signals E1, E5a and E5b.

Note 1.— E5a and E5b signals are multiplexed together through an AltBOC scheme and transmitted at the E5 carrier frequency centred at 1191.795 MHz. AltBOC modulation allows E5a signal components and E5b signal components to be recovered separately by using a QPSK receiver centred on the individual E5a and E5b frequencies.

Note 2.— AltBOC modulation is specified in Appendix B, 3.1.3.1.1.3.13.

Note 3.— Detailed Galileo signals RF characteristics are specified in Appendix B, 3.1.3.1.1.

3.7.3.1.3.8.1 *E1 radio frequency (RF) characteristics*

3.7.3.1.3.8.1.1 *E1 carrier frequency.* Each Galileo satellite shall broadcast E1 signal at the carrier frequency of 1575.420 MHz using CDMA.

3.7.3.1.3.8.1.2 *E1 signal spectrum*. The Galileo signal power on E1 shall be contained within a 24.552 MHz band centred on the E1 frequency.

3.7.3.1.3.8.1.3 *E1 signal polarization*. The transmitted E1 RF signal shall be right-hand circularly polarized.

3.7.3.1.3.8.1.4 *E1 minimum signal power level.* Each Galileo satellite shall broadcast an E1 navigation signal with sufficient power such that, at all unobstructed locations near the ground from which the satellite is observed at an elevation angle of 5 degrees or higher, the level of the received RF signal at the antenna port of a 3 dBi linearly-polarized antenna shall not be less than –157.9 dBW for all antenna orientations orthogonal to the direction of propagation.

3.7.3.1.3.8.1.5 *E1 maximum signal power level.* Each Galileo satellite shall broadcast an E1 navigation signal such that the level of the received RF signal at the antenna port of a 3 dBi linearly-polarized antenna shall not exceed –151.45 dBW.

3.7.3.1.3.8.1.6 *E1 signal modulation.* The E1 signal shall be a composite binary offset carrier (CBOC) generated by multiplexing a wideband binary offset carrier (BOC) signal BOC(6,1) with a narrowband signal BOC(1,1) in such a way that 1/11 of the power is allocated, in average, to the high frequency component.

Note. — CBOC modulation is specified in Appendix B, 3.1.3.1.1.2.7.

3.7.3.1.3.8.2 *E5a radio frequency (RF) characteristics*

Note.— Additional information concerning the overall E5 signal modulation is given in the European GNSS (Galileo) Open Service Signal-In-Space Interface Control Document (Issue 2.0), dated January 2021 (hereinafter referred to as "Galileo OS SIS ICD").

3.7.3.1.3.8.2.1 *E5a carrier frequency.* Each Galileo satellite shall broadcast E5a signal at the carrier frequency of 1 176.45 MHz using CDMA.

3.7.3.1.3.8.2.2 *E5a signal spectrum.* The Galileo signal power on E5a shall be contained within a 20.460 MHz band centred on the E5a frequency.

3.7.3.1.3.8.2.3 *E5a signal polarization.* The transmitted E5a RF signal shall be right-hand circularly polarized.

3.7.3.1.3.8.2.4 *E5a minimum signal power level*. Each Galileo satellite shall broadcast an E5a navigation signal with sufficient power such that, at all unobstructed locations near the ground from which the satellite is observed at an elevation angle of 5 degrees or higher, the level of the received RF signal at the antenna port of a 3 dBi linearly-polarized antenna shall not be less than –155.90 dBW for all antenna orientations orthogonal to the direction of propagation.

3.7.3.1.3.8.2.5 *E5a maximum signal power level.* Each Galileo satellite shall broadcast an E5a navigation signal such that the level of the received RF signal at the antenna port of a 3 dBi linearly-polarized antenna shall not exceed –149.45 dBW.

3.7.3.1.3.8.2.6 *E5a signal modulation.* The E5a signal shall be generated from Modulo-2 addition of the E5a navigation data stream with the 10.23 megachips per second E5a data channel ranging code (E5a-I), and the 10.23 megachips per second E5a pilot channel ranging code (E5a-Q).

3.7.3.1.3.8.3 *E5b radio frequency (RF) characteristics*

Note.— Additional information concerning the overall E5 signal modulation is given in Galileo OS SIS ICD.

3.7.3.1.3.8.3.1 *E5b carrier frequency.* Each Galileo satellite shall broadcast E5b signal at the carrier frequency of 1 207.14 MHz using CDMA.

3.7.3.1.3.8.3.2 *E5b signal spectrum.* The Galileo signal power on E5b shall be contained within a 20.460 MHz band centred on the E5b frequency.

3.7.3.1.3.8.3.3 *E5b signal polarization*. The transmitted E5b RF signal shall be right-hand circularly polarized.

3.7.3.1.3.8.3.4 *E5b minimum signal power level.* Each Galileo satellite shall broadcast an E5b navigation signal with sufficient power such that, at all unobstructed locations near the ground from which the satellite is observed at an elevation angle of 5 degrees or higher, the level of the received RF signal at the antenna port of a 3 dBi linearly-polarized antenna shall not be less than –155.90 dBW for all antenna orientations orthogonal to the direction of propagation.

3.7.3.1.3.8.3.5 *E5b maximum signal power level.* Each Galileo satellite shall broadcast an E5b navigation signal such that the level of the received RF signal at the antenna port of a 3 dBi linearly-polarized antenna shall not exceed –149.45 dBW.

3.7.3.1.3.8.3.6 *E5b signal modulation.* The E5b signal shall be generated from Modulo-2 addition of the E5b navigation data stream with the 10.23 megachips per second E5b data channel ranging code (E5b-I), and the 10.23 megachips per second E5b pilot channel ranging code (E5b-Q).

3.7.3.1.3.9 *Galileo system time.* Galileo system time (GST) shall be referenced to UTC BIPM (UTC as coordinated by the International Bureau of Weights and Measures).

Note.— Further details on GST are specified in Appendix B, 3.1.3.4.1.

3.7.3.1.3.10 *Coordinate system.* The Galileo coordinate system shall be Galileo Terrestrial Reference Frame (GTRF).

Note.— GTRF details are specified in Appendix B, 3.1.3.5.2.

3.7.3.1.3.11 *Navigation information.* The navigation data transmitted by the satellites shall include the necessary information to determine:

a) satellite time of transmission;

b) satellite position;

c) satellite health;

d) satellite clock correction;

e) ionospheric delay effects;

f) time transfer to UTC; and

g) constellation status.

Note.— Structure and contents of data are specified in Appendix B, 3.1.3.1.2 and 3.1.3.1.3, respectively.

3.7.3.1.4 *BDS Open Service (BDS OS) (B1I, B1C, B2a)*

Note 1.— The BDS OS signals are broadcast in three frequency bands identified as B1I, B1C and B2a. The single-frequency BDS OS is based on any one of the B1I, B1C or B2a signals. The dual-frequency BDS OS is based on a combination of the B1C and B2a signals.

Note 2.— BDS OS signals B1I, B1C and B2a are broadcast by all BDS-3 (BDS third-phase) medium earth orbit (MEO) and inclined geosynchronous orbit (IGSO) satellites.

Note 3.— All requirements specified in this section are based on the BDS-3 constellation configuration of 24 MEO and 3 IGSO satellites.

3.7.3.1.4.1 *Space and control segment accuracy*

Note.— The following accuracy standards do not include atmospheric or receiver errors as described in Attachment D, 4.1.4.2. They only apply under the condition that the aircraft receiver uses healthy satellites.

3.7.3.1.4.1.1 *Positioning accuracy.* The BDS position errors shall not exceed the following limits:

Signals	B1I	B1C	B2a	B1C-B2a
Global average 95% threshold:				
Horizontal position over a measurement period of 7 days	9 m	9 m	9 m	9 m
Vertical position error over a measurement period of 7 days	15 m	15 m	15 m	15 m
Worst site 95% threshold:				
Horizontal position error over a measurement period of 7 days	15 m	15 m	15 m	15 m
Vertical position error over a measurement period of 7 days	22 m	22 m	22 m	22 m

3.7.3.1.4.1.2 *Time transfer accuracy*. The BDS OS time transfer error shall not exceed 50 nanoseconds, 95 per cent of the time.

3.7.3.1.4.1.3 *Range domain accuracy.* The BDS range domain error shall not exceed the following limits:

Signals	B1I	B1C	B2a	B1C- B2a
Range error of any satellite with reliability specified in 3.7.3.1.4.3	15 m	15 m	15 m	15 m
95th percentile error of any satellite over a measurement period of 7 days (global average)	4.6 m	4.6 m	4.6 m	4.6 m
95th percentile range rate error of any satellite (global average)	0.02 m per second	0.02 m per second	0.02 m per second	0.02 m per second
95th percentile range acceleration error of any satellite (global average)	0.008 m per second squared	0.008 m per second squared	0.008 m per second squared	0.008 m per second squared

3.7.3.1.4.2 *Availability.* The BDS OS availability shall be as follows:

Signals	B1I	B1C	B2a	B1C- B2a
Average location:				
Horizontal service availability over a measurement period of 7 days	≥ 99% (15 m 95% threshold)	≥ 90% (15 m 95% threshold)	≥ 99% (15 m 95% threshold)	≥ 99% (15 m 95% threshold)
Vertical service availability over a measurement period of 7 days	≥ 99% (22 m 95% threshold)	≥ 90% (22 m 95% threshold)	≥ 99% (22 m 95% threshold)	≥ 99% (22 m 95% threshold)
Worst-case location:				
Horizontal service availability over a measurement period of 7 days	≥ 90% (15 m 95% threshold)	≥ 90% (15 m 95% threshold)	≥ 90% (15 m 95% threshold)	≥ 90% (15 m 95% threshold)
Vertical service availability over a measurement period of 7 days	≥ 90% (22 m 95% threshold)	≥ 90% (22 m 95% threshold)	≥ 90% (22 m 95% threshold)	≥ 90% (22 m 95% threshold)

Note. — Availability applies under the condition that the aircraft receiver uses healthy satellites.

3.7.3.1.4.3 *Reliability.* The BDS OS reliability relative to the 15 m range error requirement in 3.7.3.1.4.2 shall be within the following limits:

a) reliability — at least 99.94 per cent (global average); and

b) reliability — at least 99.79 per cent (worst single point average).

Note. — Reliability applies under the condition that the satellite is broadcasting a healthy indication.

3.7.3.1.4.4 *Probability of major service failure*

Note.— The standards apply under the condition that the satellite is broadcasting a healthy indication.

3.7.3.1.4.4.1 *Probability of a satellite major service failure condition (P_{sat}).* The probability that the BDS OS SIS user range error of any satellite will exceed the not-to-exceed (NTE) tolerance without an alert received at the user receiver antenna within 300 seconds, shall not exceed 1×10^{-5}.

3.7.3.1.4.4.2 *Probability of a common-cause major service failure condition (P_{const}).*The probability that the BDS OS SIS user range error of two or more satellites will exceed the NTE tolerance due to a common fault without an alert received at the user receiver antenna within 300 seconds, shall not exceed 6×10^{-5}.

Note 1.— For B1I signals, the NTE tolerance is defined to be 4.42 times the upper bound of the URA range corresponding to the URA index (URAI) value being broadcast in D1 navigation messages, as described in Appendix B, 3.1.4.1.3.1.2.

Note 2.— For B1C and B2a signals, the NTE tolerance is defined to be 4.42 times the signal-in-space accuracy (SISA) value calculated as described in Appendix B, 3.1.4.2.5.

Note 3.— The mapping between BDS B1I SIS status and BDS B1I flags contained in the navigation data message is specified in Appendix B, 3.1.4.1.3.1.3. The mapping between BDS B1C and B2a SIS status and BDS B1C and B2a flags contained in the navigation data message is specified in Appendix B, 3.1.4.1.3.2.7.2.

3.7.3.1.4.5 *Continuity.* The probability of losing BDS OS SIS availability from a slot of the nominal 27-slot constellation due to unscheduled interruption, shall not exceed the following limits:

Signals	B1I	B1C	B2a
MEO	2×10^{-3} per hour	2×10^{-3} per hour	2×10^{-3} per hour
IGSO	5×10^{-3} per hour	2×10^{-3} per hour	2×10^{-3} per hour

Note.— Continuity applies under the condition that the satellite is broadcasting a healthy indication.

3.7.3.1.4.6 *Coverage.* BDS OS shall cover the surface of the earth up to an altitude of 1 000 km.

3.7.3.1.4.7 *Radio frequency (RF) characteristics*

Note.— Detailed BDS OS signals RF characteristics are specified in Appendix B, 3.1.4.1.1.

3.7.3.1.4.8 *B1I radio frequency (RF) characteristics*

3.7.3.1.4.8.1 *B1I carrier frequency.* Each BDS-3 MEO or IGSO satellite shall broadcast a BDS B1I OS signal at the carrier frequency of 1 561.098 MHz using code division multiple access (CDMA).

3.7.3.1.4.8.2 *B1I signal spectrum.* The BDS OS B1I signal power shall be contained within a ±2.046 MHz band (1 559.052 – 1 563.144 MHz) centred on the 1 561.098 MHz frequency.

3.7.3.1.4.8.3 *B1I signal polarization.* The transmitted B1I RF signal shall be right-hand circularly polarized.

3.7.3.1.4.8.4 *B1I signal power levels*

3.7.3.1.4.8.4.1 Each BDS-3 MEO satellite shall broadcast a B1I navigation signal with sufficient power such that, at all unobstructed locations near the ground from which the satellite is observed at an elevation angle of 5 degrees or higher, the level of the received RF signal at the antenna port of a 3 dBi linearly-polarized antenna is within the range of –163 dBW to –154.8 dBW for all antenna orientations orthogonal to the direction of propagation.

3.7.3.1.4.8.4.2 Each BDS-3 IGSO satellite shall broadcast a B1I navigation signal with sufficient power such that, at all unobstructed locations near the ground from which the satellite is observed at an elevation angle of 5 degrees or higher, the level of the received RF signal at the antenna port of a 3 dBi linearly-polarized antenna is within the range of –163 dBW to –156.5 dBW for all antenna orientations orthogonal to the direction of propagation.

3.7.3.1.4.8.5 *B1I signal modulation*. The BDS OS B1I signal shall be binary phase shift key (BPSK) modulated.

3.7.3.1.4.9 *B1C radio frequency (RF) characteristics*

3.7.3.1.4.9.1 *B1C carrier frequency.* Each BDS-3 MEO or IGSO satellite shall broadcast a BDS OS B1C signal at the carrier frequency of 1 575.42 MHz using CDMA.

3.7.3.1.4.9.2 *B1C signal spectrum.* The BDS OS signal power on B1C shall be contained within a 32.736 MHz band centred on the B1C frequency.

3.7.3.1.4.9.3 *B1C signal polarization.* The transmitted B1C RF signal shall be right-hand circularly polarized.

3.7.3.1.4.9.4 *B1C signal power levels*

3.7.3.1.4.9.4.1 Each BDS-3 MEO satellite shall broadcast a B1C navigation signal with sufficient power such that, at all unobstructed locations near the ground from which the satellite is observed at an elevation angle of 5 degrees or higher, the level of the received RF signal at the antenna port of a 3 dBi linearly-polarized antenna is within the range of –159 dBW to –152.5 dBW for all antenna orientations orthogonal to the direction of propagation.

3.7.3.1.4.9.4.2 Each BDS-3 IGSO satellite shall broadcast a B1C navigation signal with sufficient power such that, at all unobstructed locations near the ground from which the satellite is observed at an elevation angle of 5 degrees or higher, the level of the received RF signal at the antenna port of a 3 dBi linearly-polarized antenna is within the range of –161 dBW to –153.5 dBW for all antenna orientations orthogonal to the direction of propagation.

3.7.3.1.4.9.5 *B1C signal modulation.* The B1C signal shall comprise two components, known as B1C data component and B1C pilot component. The B1C data component shall be sine-phased binary offset carrier (BOC) modulated with the Modulo-2 addition of the ranging code and the navigation data. The B1C pilot component shall be quadrature multiplexed BOC (QMBOC) modulated with the ranging code. Ranging codes on B1C data component and B1C pilot component shall have the same chipping rate of 1.023 megachips per second.

Note.— Additional information concerning B1C modulation is given in the BeiDou Navigation Satellite System Signal In Space Interface Control Document Open Service Signal B1C (Version 1.0), dated December 2017 (hereinafter referred to as "BDS OS B1C ICD"), 4.2.

3.7.3.1.4.10 *B2a radio frequency (RF) characteristics*

3.7.3.1.4.10.1 *B2a carrier frequency.* Each BDS-3 MEO and IGSO satellite shall broadcast a BDS OS B2a signal at the carrier frequency of 1 176.45 MHz using CDMA.

3.7.3.1.4.10.2 *B2a signal spectrum.* The BDS OS signal power on B2a shall be contained within a 20.46 MHz band centred on the B2a frequency.

3.7.3.1.4.10.3 *B2a signal polarization.* The transmitted B2a RF signal shall be right-hand circularly polarized.

3.7.3.1.4.10.4 *B2a signal power levels*

3.7.3.1.4.10.4.1 Each BDS-3 MEO satellite shall broadcast a B2a navigation signal with sufficient power such that, at all unobstructed locations near the ground from which the satellite is observed at an elevation angle of 5 degrees or higher, the level of the received RF signal at the antenna port of a 3 dBi linearly-polarized antenna is within the range of –156 dBW to -148.5 dBW for all antenna orientations orthogonal to the direction of propagation.

3.7.3.1.4.10.4.2 Each BDS-3 IGSO satellite shall broadcast a B2a navigation signal with sufficient power such that, at all unobstructed locations near the ground from which the satellite is observed at an elevation angle of 5 degrees or higher, the level of the received RF signal at the antenna port of a 3 dBi linearly-polarized antenna is within the range of –158 dBW to -150.5 dBW for all antenna orientations orthogonal to the direction of propagation.

3.7.3.1.4.10.5 *B2a signal modulation.* The B2a signal shall comprise two components, known as B2a data component and B2a pilot component. The B2a data component shall be BPSK modulated with the Modulo-2 addition of the ranging code and the navigation data. The B2a pilot component shall be BPSK modulated with the ranging code. Ranging codes on B2a data component and B2a pilot component shall have the same chipping rate of 10.23 megachips per second.

Note.— Additional information concerning B2a modulation is given in the BeiDou Navigation Satellite System Signal In Space Interface Control Document Open Service Signal B2a (Version 1.0), dated December 2017 (hereinafter referred to as "BDS OS B2a ICD"), 4.2.

3.7.3.1.4.11 *BDS time.* BDS time (BDT) shall be referenced to UTC as maintained by the National Time Service Center (NTSC), Chinese Academy of Sciences.

Note.— BDT details are specified in Appendix B, 3.1.4.4.

3.7.3.1.4.12 *Coordinate system.* The BDS coordinate system shall be BeiDou Coordinate System (BDCS).

Note.— BDCS details are specified in Appendix B, 3.1.4.5.

3.7.3.1.4.13 *Navigation information.* The navigation data transmitted by the satellites shall include the necessary information to determine:

a) satellite time of transmission;

b) satellite position;

c) satellite health;

d) satellite clock correction;

e) ionospheric delay effects;

f) time transfer to UTC; and

g) constellation status.

3.7.3.2 *Reserved.*

3.7.3.3 *Aircraft-based augmentation system (ABAS)*

3.7.3.3.1 *Performance*. The ABAS function combined with one or more of the core satellite constellations and both a fault-free GNSS receiver and fault-free aircraft system used for the ABAS function shall meet the requirements for accuracy, integrity, continuity and availability as stated in 3.7.2.4 for the intended operation.

Note.— For GNSS receivers supporting the ABAS function, the requirements to be resistant to interference, as specified in 3.7.4, apply.

3.7.3.3.2 *Advanced receiver autonomous integrity monitoring (ARAIM).* If the ABAS function implements ARAIM using integrity support data (ISD), the function shall meet the requirements in Appendix B, 3.4.1.

3.7.3.4 *Satellite-based augmentation system (SBAS)*

Note.— All SBAS have to fulfil the requirements introduced in this section and in Appendix B, 3.5 except when a specific condition is mentioned in the requirement such as the provision of optional functions.

3.7.3.4.1 *Performance*. SBAS combined with one or more of the other GNSS elements and a fault-free receiver shall meet the requirements for system accuracy, integrity, continuity and availability for the intended operation as stated in 3.7.2.4, throughout the corresponding service area (see 3.7.3.4.4).

Note.— SBAS complements the core satellite constellation(s) by increasing accuracy, integrity, continuity and availability of navigation provided within a service area, typically including multiple aerodromes.

3.7.3.4.1.1 SBAS combined with one or more of the other GNSS elements and a fault-free receiver shall meet the requirements for signal-in-space integrity as stated in 3.7.2.4, throughout the SBAS coverage area.

Note.— For L1 SBAS, message Type 27 or 28 is used to comply with the integrity requirements in the coverage area. See Appendix B, 3.5.7.4.7. Additional guidance on the rationale and interpretation of this requirement is provided in Attachment D, 3.3 and 6.2.3.

3.7.3.4.2 *Functions.* SBAS shall perform one or more of the following functions:

a) L1 SBAS ranging: provide an additional L1 ranging signal with an accuracy indicator from an SBAS satellite (3.7.3.4.3 and Appendix B, 3.5.7.2);

b) L1 SBAS GNSS satellite status: determine and transmit the GNSS satellite health status (Appendix B, 3.5.7.3);

c) L1 SBAS basic differential correction: provide GNSS satellite ephemeris and clock corrections (fast and long-term) to be applied to the L1 pseudo-range measurements from satellites (Appendix B, 3.5.7.4);

d) L1 SBAS precise differential correction: determine and transmit the L1 ionospheric corrections and associated integrity data (Appendix B, 3.5.7.5);

e) dual-frequency, multi-constellation (DFMC) SBAS ranging: provide additional ionosphere-free ranging capability using L1 and L5 signals from SBAS satellites (Appendix B, 3.5.14.2); and

f) DFMC SBAS ionosphere-free differential correction: determine and transmit GNSS satellite health status, satellite ephemeris and clock corrections to be applied to the ionosphere-free pseudo-range measurements from satellites (Appendix B, 3.5.14.3) and associated integrity data.

Note 1.— For single-frequency users, if functions b) and c) are provided, SBAS in combination with core satellite constellation(s) can support departure, en-route, terminal and non-precision approach operations, and if function d) is provided in addition to b) and c), then SBAS can also support precision approach operations including Category I. The level of performance that can be achieved depends upon the infrastructure incorporated into SBAS and the ionospheric conditions in the geographic area of interest.

Note 2.— For dual-frequency users, if function f) is provided, SBAS in combination with core satellite constellation(s) can support departure, en-route, terminal, non-precision approach operations and precision approach operations including Category I.

Note 3.— In order to provide function e), SBAS needs to broadcast an L1 signal that meets the requirements for ionosphere-free ranging using L1 and L5 pseudo-range measurements.

Note 4.— The ionospheric corrections are only broadcast on L1. Dual-frequency users will use an ionosphere-free pseudo-range measurement and not require ionospheric corrections. Ionosphere-free pseudo-range combination for DFMC SBAS is further defined in Appendix B, 3.5.15.1.

3.7.3.4.3 *Ranging.* When SBAS is providing a ranging service, the following Standards shall apply:

3.7.3.4.3.1 Excluding atmospheric effects, the range error for the ranging signal from SBAS satellites shall not exceed 25 m (82 ft) (95 per cent).

3.7.3.4.3.2 The probability that the SBAS L1 range error exceeds 150 m (490 ft) in any hour shall not exceed 10^{-5}.

3.7.3.4.3.3 The probability of unscheduled outages of the ranging function from an SBAS satellite in any hour shall not exceed 10^{-3}.

3.7.3.4.3.4 The range rate error shall not exceed 2 m (6.6 ft) per second.

3.7.3.4.3.5 The range acceleration error shall not exceed 0.019 m (0.06 ft) per second-squared.

3.7.3.4.4 *Service area*. An SBAS service area for any approved type of operation shall be a declared area within the SBAS coverage area where SBAS meets the corresponding requirements of 3.7.2.4.

Note 1.— An SBAS system can have different service areas corresponding to different types of operation (e.g. APV-I, Category I, etc.).

Note 2.— The coverage area is that area within which the SBAS broadcast can be received (i.e. the union of SBAS satellite footprints).

Note 3.— SBAS coverage and service areas are discussed in Attachment D, 6.2.

3.7.3.4.5 *RF characteristics for the SBAS L1 signal*

Note.— Detailed RF characteristics are specified in Appendix B, 3.5.2 for L1.

3.7.3.4.5.1 *L1 carrier frequency*. The L1 carrier frequency shall be 1 575.42 MHz.

3.7.3.4.5.2 *L1 signal spectrum*. At least 95 per cent of the L1 broadcast power shall be contained within a ±12 MHz band centred on the L1 frequency. The bandwidth of the L1 signal transmitted by an SBAS satellite shall be at least 2.2 MHz.

Note.— The SBAS L1 RF link needs to provide a higher transmission bandwidth to support the SBAS ranging accuracy figure in Appendix B, 3.5.15.4.1, for DFMC SBAS ranging service. A higher transmission bandwidth will improve the performance of the L1 SBAS ranging service. See Attachment D, 6.4.6.

3.7.3.4.5.3 *L1 satellite signal power level*

3.7.3.4.5.3.1 Each SBAS satellite placed in orbit before 1 January 2014 shall broadcast navigation signals on L1 with sufficient power such that, at all unobstructed locations near the ground from which the satellite is observed at an elevation angle of 5 degrees or higher, the level of the received RF signal at the antenna port of a 3 dBi linearly polarized antenna is within the range of –161 dBW to –153 dBW for all antenna orientations orthogonal to the direction of propagation.

3.7.3.4.5.3.2 Each SBAS satellite broadcasting an SBAS L1 signal placed in orbit after 31 December 2013 shall comply with the following requirements:

a) The satellite shall broadcast navigation signals on L1 with sufficient power such that, at all unobstructed locations near the ground from which the satellite is observed at or above the minimum elevation angle for which a trackable geostationary orbit (GEO) satellite signal needs to be provided, the level of the received RF signal at the antenna port of the antenna specified in Appendix B, Table B-172, is at least –164.0 dBW.

b) The minimum elevation angle used to determine GEO coverage shall not be less than 5 degrees for a user near the ground.

c) The level of a received SBAS RF signal on L1 at the antenna port of a 0 dBic antenna located near the ground shall not exceed –152.5 dBW.

d) The ellipticity of the broadcast L1 signal shall be no worse than 2 dB for the angular range of ±9.1° from boresight.

3.7.3.4.5.4 *Polarization*. The broadcast signal on L1 shall be right-hand circularly polarized.

3.7.3.4.5.5 *Modulation.* The transmitted sequence on L1 shall be the Modulo-2 addition of the navigation message at a rate of 500 symbols per second and the 1 023 bit pseudo-random noise code. It shall then be BPSK-modulated onto the carrier at a rate of 1.023 megachips per second.

3.7.3.4.6 *RF characteristics for the SBAS L5 signal*

Note.— Detailed RF characteristics are specified in Appendix B, 3.5.9 for L5.

3.7.3.4.6.1 *L5 carrier frequency.* The L5 carrier frequency shall be 1 176.45 MHz.

3.7.3.4.6.2 *L5 signal spectrum.* At least 95 per cent of the L5 broadcast power shall be contained within a bandwidth centred on the L5 frequency and between 20 MHz and 24 MHz.

3.7.3.4.6.3 *L5 signal power level.* Each SBAS satellite broadcasting an SBAS L5 signal shall comply with the following additional requirements:

a) The satellite shall broadcast navigation signals on L5 with sufficient power such that, at all unobstructed locations near the ground from which the satellite is observed at or above the minimum elevation angle for which a trackable signal needs to be provided, the level of the received RF signal at the output of a 3 dBi linearly polarized antenna shall be at least –158 dBW for all antenna orientations orthogonal to the direction of propagation.

b) The minimum elevation angle used to determine SBAS satellite coverage shall not be less than 5 degrees for a user near the ground.

c) The level of a received SBAS RF signal on L5 at the output of a 0 dBic right-hand circularly polarized antenna located near the ground shall not exceed –150.5 dBW.

d) The ellipticity of the broadcast L5 signal shall be no worse than 2 dB for the angular range of ±9.1° from boresight.

Note.— The received signal levels, from a) and c), are measured within a ±10 MHz frequency band centred on the L5 frequency.

3.7.3.4.6.4 *Polarization.* The broadcast signal on L5 shall be right-hand circularly polarized.

3.7.3.4.6.5 *Modulation*. The transmitted sequence on L5 in-phase shall be the result of the 250-bits of the navigation message with forward error correction (FEC) applied for 500 symbols per second that is then bi-binary encoded and finally combined with the 10 230 bit pseudo-random noise code using Modulo-2 addition. The resulting sequence shall then be BPSK-modulated onto the carrier at a rate of 10.23 megachips per second.

Note.— Detailed L5 modulation characteristics for L5 are specified in Appendix B, 3.5.9.

3.7.3.4.7 *Timing*

3.7.3.4.7.1 *SBAS network time (SNT) for L1 SBAS.* The difference between SNT of the SBAS corrections on L1 and GPS time shall not exceed 50 nanoseconds.

3.7.3.4.7.2 *SBAS network time (SNT) for DFMC SBAS.* The difference between SNT of the SBAS corrections broadcast on L5 and the reference time of the core constellation designated as reference constellation (see the time reference identifier parameter in Appendix B, 3.5.11.4 broadcast by DFMC SBAS) shall not exceed 1 microsecond.

3.7.3.4.8 *L1 SBAS navigation information.* The navigation data transmitted by an SBAS satellite on L1 shall include the necessary information to support L1 SBAS services to determine:

a) SBAS satellite time of transmission;

b) SBAS satellite position;

c) corrected satellite time for all satellites;

d) corrected satellite position for all satellites;

e) ionospheric propagation delay effects;

f) user position integrity;

g) time transfer to UTC (optional); and

h) service level status.

Note.— Structure and contents of data are specified in Appendix B, 3.5.3 and 3.5.4, respectively.

3.7.3.4.9 *DFMC SBAS navigation information.* The navigation data transmitted by an SBAS satellite on L5 shall include the necessary information to support DFMC SBAS services to determine:

a) SBAS satellite time of transmission;

b) SBAS satellite position;

c) corrected satellite time for all monitored satellites;

d) corrected satellite position for all monitored satellites;

e) user position integrity; and

f) time transfer to UTC (optional).

Note.— Structure and contents of data are specified in Appendix B, 3.5.10 and 3.5.11, respectively.

3.7.3.5 *Ground-based augmentation system (GBAS) and ground-based regional augmentation system (GRAS)*

Note.— Except where specifically annotated, GBAS Standards and Recommended Practices apply to GBAS and GRAS.

3.7.3.5.1 *Performance*. GBAS combined with one or more of the other GNSS elements and a fault-free GNSS receiver shall meet the requirements for system accuracy, continuity, availability and integrity for the intended operation as stated in 3.7.2.4 within the service volume for the service used to support the operation as defined in 3.7.3.5.3.

Note.— GBAS is intended to support all types of approach, landing, guided take-off, departure and surface operations and may support en-route and terminal operations. GRAS is intended to support en-route, terminal, non-precision approach, departure, and approach with vertical guidance. The following SARPs are developed to support all categories of precision approach, approach with vertical guidance, and a GBAS positioning service.

3.7.3.5.2 *Functions*. GBAS shall perform the following functions:

a) provide locally relevant pseudo-range corrections;

b) provide GBAS-related data;

c) provide final approach segment data when supporting precision approach;

d) provide predicted ranging source availability data; and

e) provide integrity monitoring for GNSS ranging sources.

3.7.3.5.3 *Service volume*

3.7.3.5.3.1 *General requirement for approach services.* The minimum GBAS approach service volume shall be as follows, except where topographical features dictate and operational requirements permit:

a) laterally, beginning at 140 m (450 ft) each side of the landing threshold point/fictitious threshold point (LTP/FTP) and projecting out ±35 degrees either side of the final approach path to 28 km (15 NM) and ±10 degrees either side of the final approach path to 37 km (20 NM); and

b) vertically, within the lateral region, up to the greater of 7 degrees or 1.75 promulgated glide path angle (GPA) above the horizontal with an origin at the glide path interception point (GPIP) to an upper bound of 3 000 m (10 000 ft) height above threshold (HAT) and 0.45 GPA above the horizontal or to such lower angle, down to 0.30 GPA, as required, to safeguard the promulgated glide path intercept procedure. The lower bound is half the lowest decision height supported or 3.7 m (12 ft), whichever is larger .

Note 1.— LTP/FTP and GPIP are defined in Appendix B, 3.6.4.5.1.

Note.2 — Guidance material concerning the approach service volume is provided in Attachment D, 7.3.

3.7.3.5.3.2 *Approach services supporting autoland and guided take-off*. The minimum additional GBAS service volume to support approach operations that include automatic landing and roll-out, including during guided take-off, shall be as follows, except where operational requirements permit:

a) Horizontally, within a sector spanning the width of the runway beginning at the stop end of the runway and extending parallel with the runway centre line towards the LTP to join the minimum service volume as described in 3.7.3.5.3.1.

b) Vertically, between two horizontal surfaces one at 3.7 m (12 ft) and the other at 30 m (100 ft) above the runway centre line to join the minimum service volume as described in 3.7.3.5.3.1.

Note.— Guidance material concerning the approach service volume is provided in Attachment D, 7.3.

3.7.3.5.3.3 *GBAS positioning service.* The service volume for the GBAS positioning service shall be where the data broadcast can be received and the positioning service meets the requirements of 3.7.2.4 and supports the corresponding approved operations.

Note.— Guidance material concerning the positioning service volume is provided in Attachment D, 7.3.

3.7.3.5.4 *Data broadcast characteristics*

Note.— RF characteristics are specified in Appendix B, 3.6.2.

3.7.3.5.4.1 *Carrier frequency*. The data broadcast radio frequencies used shall be selected from the radio frequencies in the band 108 to 117.975 MHz. The lowest assignable frequency shall be 108.025 MHz and the highest assignable frequency shall be 117.950 MHz. The separation between assignable frequencies (channel spacing) shall be 25 kHz.

Note.— Guidance material on ILS/VOR/GBAS frequency assignments and geographical separation criteria is given in the Handbook on Radio Frequency Spectrum Requirements for Civil Aviation *(Doc 9718, Volume II).*

3.7.3.5.4.2 *Access technique*. A time division multiple access (TDMA) technique shall be used with a fixed frame structure. The data broadcast shall be assigned one to eight slots.

Note.— Two slots is the nominal assignment. Some GBAS facilities that use multiple VHF data broadcast (VDB) transmit antennas to improve VDB coverage may require assignment of more than two time slots. Guidance on the use of multiple antennas is given in Attachment D, 7.12.4; some GBAS broadcast stations in a GRAS may use one time slot.

3.7.3.5.4.3 *Modulation*. GBAS data shall be transmitted as 3-bit symbols, modulating the data broadcast carrier by D8PSK, at a rate of 10 500 symbols per second.

3.7.3.5.4.4 *Data broadcast RF field strength and polarization*

Note 1.— GBAS can provide a VHF data broadcast with either horizontal (GBAS/H) or elliptical (GBAS/E) polarization that employs both horizontal polarization (HPOL) and vertical polarization (VPOL) components. Aircraft using a VPOL component will not be able to conduct operations with GBAS/H equipment. Relevant guidance material is provided in Attachment D, 7.1.

Note 2.— The minimum and maximum field strengths are consistent with a minimum distance of 80 m (263 ft) from the transmitter antenna for a range of 43 km (23 NM).

Note 3.— When supporting approach services at airports with challenging VDB transmitter siting constraints, it is acceptable to adjust the service volume when operational requirements permit (as stated in the service volume definition in 3.7.3.5.3.1 and 3.7.3.5.3.2). Such adjustments of the service volume may be operationally acceptable when they have no impact on the GBAS service outside a radius of 80 m (263 ft) from the VDB antenna, assuming a nominal effective isotropically radiated power of 47dBm.

3.7.3.5.4.4.1 *GBAS/H*

3.7.3.5.4.4.1.1 A horizontally polarized signal shall be broadcast.

3.7.3.5.4.4.1.2 The effective isotropically radiated power (EIRP) shall provide for a horizontally polarized signal with a minimum field strength of 215 microvolts per metre (–99 dBW/m^2) and a maximum field strength of 0.879 volts per metre (–27 dBW/m^2) within the GBAS service volume as specified in 3.7.3.5.3.1. The field strength shall be measured

as an average over the period of the synchronization and ambiguity resolution field of the burst. Within the additional GBAS service volume, as specified in 3.7.3.5.3.2, the effective isotropically radiated power (EIRP) shall provide for a horizontally polarized signal with a minimum field strength of 215 microvolts per metre (–99 dBW/m^2) below 36 ft and down to 12 ft above the runway surface and 650 microvolts per metre (–89.5 dBW/m^2) at 36 ft or more above the runway surface.

Note.— Guidance material concerning the approach service volume is provided in Attachment D, 7.3.

3.7.3.5.4.4.2 *GBAS/E*

3.7.3.5.4.4.2.1 **Recommendation.—** *An elliptically polarized signal should be broadcast whenever practical*.

3.7.3.5.4.4.2.2 When an elliptically polarized signal is broadcast, the horizontally polarized component shall meet the requirements in 3.7.3.5.4.4.1.2, and the effective isotropically radiated power (EIRP) shall provide for a vertically polarized signal with a minimum field strength of 136 microvolts per metre (–103 dBW/m^2) and a maximum field strength of 0.555 volts per metre (–31 dBW/m^2) within the GBAS service volume. The field strength shall be measured as an average over the period of the synchronization and ambiguity resolution field of the burst.

3.7.3.5.4.5 *Power transmitted in adjacent channel*s. The amount of power during transmission under all operating conditions when measured over a 25 kHz bandwidth centred on the ith adjacent channel shall not exceed the values shown in Table 3.7.3.5-1 (located at the end of 3.7).

3.7.3.5.4.6 *Unwanted emissions.* Unwanted emissions, including spurious and out-of-band emissions, shall be compliant with the levels shown in Table 3.7.3.5-2 (located at the end of 3.7). The total power in any VDB harmonic or discrete signal shall not be greater than –53 dBm.

3.7.3.5.5 *Navigation information*. The navigation data transmitted by GBAS shall include the following information:

a) pseudo-range corrections, reference time and integrity data;

b) GBAS-related data;

c) final approach segment data when supporting precision approach; and

d) predicted ranging source availability data.

Note.— Structure and contents of data are specified in Appendix B, 3.6.3.

3.7.3.6 *Aircraft GNSS receiver*

3.7.3.6.1 The aircraft GNSS receiver shall process the signals of those GNSS elements that it intends to use as specified in Appendix B, 3.1.1 (for GPS), Appendix B, 3.1.2 (for GLONASS), Appendix B, 3.1.3 (for Galileo), Appendix B, 3.1.4 (for BDS), Appendix B 3.3 (for combined core satellite constellations), Appendix B, 3.4 (for ABAS), Appendix B, 3.5 (for SBAS) and Appendix B, 3.6 (for GBAS and GRAS).

3.7.4 Resistance to interference

3.7.4.1 GNSS shall comply with performance requirements defined in 3.7.2.4 and Appendix B, 3.7 in the presence of the interference environment defined in Appendix B, 3.7.

Note.— GNSS elements operating within the frequency bands 1 164 – 1 215 MHz and 1 559 – 1 610 MHz are classified by the ITU as operating in the radionavigation-satellite service (RNSS). Those frequency bands also include global allocations to the ~~and~~ aeronautical radionavigation service (ARNS). Both aeronautical uses of those services are considered "safety services" and are afforded special spectrum protection status in the ITU radio regulations. In order to achieve the performance objectives for precision approach guidance to be supported by the GNSS and its augmentations, RNSS/ARNS is intended to remain the only global allocation in the 1 164 – 1 215 MHz and 1 559 – 1 610 MHz band and emissions from systems in this and adjacent frequency bands are intended to be tightly controlled by national and/or international regulation.

3.7.5 Database

Note.— SARPs applicable to aeronautical data are provided in Annex 4, Annex 11, Annex 14 and Annex 15.

3.7.5.1 Aircraft GNSS equipment that uses a database shall provide a means to:

a) update the electronic navigation database; and

b) determine the Aeronautical Information Regulation and Control (AIRAC) effective dates of the aeronautical database.

Note.— Guidance material on the need for a current navigation database in aircraft GNSS equipment is provided in Attachment D, 11.

Table 3.7.2.4-1 Signal-in-space performance requirements

Typical operation	Accuracy horizontal 95% (Notes 1 and 3)	Accuracy vertical 95% (Notes 1 and 3)	Integrity (Note 2)	Time-to-alert (Note 3)	Continuity (Note 4)	Availability (Note 5)
En-route	3.7 km (2.0 NM)	N/A	$1 - 1 \times 10^{-7}$/h	5 min	$1 - 1 \times 10^{-4}$/h to $1 - 1 \times 10^{-8}$/h	0.99 to 0.99999
En-route, Terminal	0.74 km (0.4 NM)	N/A	$1 - 1 \times 10^{-7}$/h	15 s	$1 - 1 \times 10^{-4}$/h to $1 - 1 \times 10^{-8}$/h	0.99 to 0.99999
Initial approach, Intermediate approach, Non-precision approach (NPA), Departure	220 m (720 ft)	N/A	$1 - 1 \times 10^{-7}$/h	10 s	$1 - 1 \times 10^{-4}$/h to $1 - 1 \times 10^{-8}$/h	0.99 to 0.99999
Approach operations with vertical guidance (APV-I) (Note 8)	16.0 m (52 ft)	20 m (66 ft)	$1 - 2 \times 10^{-7}$ in any approach	10 s	$1 - 8 \times 10^{-6}$ per 15 s	0.99 to 0.99999
Approach operations with vertical guidance (APV-II) (Note 8)	16.0 m (52 ft)	8.0 m (26 ft)	$1 - 2 \times 10^{-7}$ in any approach	6 s	$1 - 8 \times 10^{-6}$ per 15 s	0.99 to 0.99999
Category I precision approach (Note 7)	16.0 m (52 ft)	6.0 m to 4.0 m (20 ft to 13 ft) (Note 6)	$1 - 2 \times 10^{-7}$ in any approach	6 s	$1 - 8 \times 10^{-6}$ per 15 s	0.99 to 0.99999

NOTES.—

1. The 95th percentile values for GNSS position errors are those required for the intended operation at the lowest height above threshold (HAT), if applicable. Detailed requirements are specified in Appendix B and guidance material is given in Attachment D, 3.2.
2. The definition of the integrity requirement includes an alert limit against which the requirement can be assessed. For Category I precision approach, a vertical alert limit (VAL) greater than 10 m for a specific system design may only be used if a system-specific safety analysis has been completed. Further guidance on the alert limits is provided in Attachment D, 3.3.6 to 3.3.10. These alert limits are:

Typical operation	Horizontal alert limit	Vertical alert limit
En-route (oceanic/continental low density)	7.4 km (4 NM)	N/A
En-route (continental)	3.7 km (2 NM)	N/A
En-route, Terminal	1.85 km (1 NM)	N/A
NPA	556 m (0.3 NM)	N/A
APV-I	40 m (130 ft)	50 m (164 ft)
APV- II	40 m (130 ft)	20.0 m (66 ft)
Category I precision approach	40 m (130 ft)	35.0 m to 10.0 m (115 ft to 33 ft)

3. The accuracy and time-to-alert requirements include the nominal performance of a fault-free receiver.
4. Ranges of values are given for the continuity requirement for en-route, terminal, initial approach, NPA and departure operations, as this requirement is dependent upon several factors including the intended operation, traffic density, complexity of airspace and availability of alternative navigation aids. The lower value given is the minimum requirement for areas with low traffic density and airspace complexity. The higher value given is appropriate for areas with high traffic density and airspace complexity (see Attachment D, 3.4.2). Continuity requirements for APV and Category I operations apply to the average risk (over time) of loss of service, normalized to a 15-second exposure time (see Attachment D, 3.4.3).
5. A range of values is given for the availability requirements as these requirements are dependent upon the operational need which is based upon several factors including the frequency of operations, weather environments, the size and duration of the outages, availability of alternate navigation aids, radar coverage, traffic density and reversionary operational procedures. The lower values given are the minimum availabilities for which a system is considered to be practical but are not adequate to replace non-GNSS navigation aids. For en-route navigation, the higher values given are adequate for GNSS to be the only navigation aid provided in an area. For approach and departure, the higher values given are based upon the availability requirements at airports with a large amount of traffic assuming that operations to or from multiple runways are affected but reversionary operational procedures ensure the safety of the operation (see Attachment D, 3.5).
6. A range of values is specified for Category I precision approach. The 4.0 m (13 feet) requirement is based upon ILS specifications and represents a conservative derivation from these specifications (see Attachment D, 3.2.7).
7. GNSS performance requirements intended to support Category II and III precision approach operations necessitate lower level requirements in the technical appendix (Appendix B, 3.6) to be applied in addition to these signal-in-space requirements (see Attachment D, 7.5.1).
8. The terms APV-I and APV-II refer to two levels of GNSS approach and landing operations with vertical guidance (APV) and these terms are not necessarily intended to be used operationally.

Table 3.7.3.5-1. GBAS broadcast power transmitted in adjacent channels

Channel	Relative power	Maximum power
1st adjacent	–40 dBc	12 dBm
2nd adjacent	–65 dBc	–13 dBm
4th adjacent	–74 dBc	–22 dBm
8th adjacent	–88.5 dBc	–36.5 dBm
16th adjacent	–101.5 dBc	–49.5 dBm
32nd adjacent	–105 dBc	–53 dBm
64th adjacent	–113 dBc	–61 dBm
76th adjacent and beyond	–115 dBc	–63 dBm

NOTES.—

1. The maximum power applies if the authorized transmitter power exceeds 150 W.
2. The relationship is linear between single adjacent points designated by the adjacent channels identified above.

Table 3.7.3.5-2. GBAS broadcast unwanted emissions

Frequency	Relative unwanted emission level (Note 2)	Maximum unwanted emission level (Note 1)
9 kHz to 150 kHz	–93 dBc (Note 3)	–55 dBm/1 kHz (Note 3)
150 kHz to 30 MHz	–103 dBc (Note 3)	–55 dBm/10 kHz (Note 3)
30 MHz to 106.125 MHz	–115 dBc	–57 dBm/100 kHz
106.425 MHz	–113 dBc	–55 dBm/100 kHz
107.225 MHz	–105 dBc	–47 dBm/100 kHz
107.625 MHz	–101.5 dBc	–53.5 dBm/10 kHz
107.825 MHz	–88.5 dBc	–40.5 dBm/10 kHz
107.925 MHz	–74 dBc	–36 dBm/1 kHz
107.9625 MHz	–71 dBc	–33 dBm/1 kHz
107.975 MHz	–65 dBc	–27 dBm/1 kHz
118.000 MHz	–65 dBc	–27 dBm/1 kHz
118.0125 MHz	–71 dBc	–33 dBm/1 kHz
118.050 MHz	–74 dBc	–36 dBm/1 kHz
118.150 MHz	–88.5 dBc	–40.5 dBm/10 kHz
118.350 MHz	–101.5 dBc	–53.5 dBm/10 kHz
118.750 MHz	–105 dBc	–47 dBm/100 kHz
119.550 MHz	–113 dBc	–55 dBm/100 kHz
119.850 MHz to 1 GHz	–115 dBc	–57 dBm/100 kHz
1 GHz to 1.7 GHz	–115 dBc	–47 dBm/1 MHz

NOTES.—

1. The maximum unwanted emission level (absolute power) applies if the authorized transmitter power exceeds 150 W.
2. The relative unwanted emission level is to be computed using the same bandwidth for desired and unwanted signals. This may require conversion of the measurement for unwanted signals done using the bandwidth indicated in the maximum unwanted emission level column of this table.
3. This value is driven by measurement limitations. Actual performance is expected to be better.
4. The relationship is linear between single adjacent points designated by the adjacent channels identified above.

3.8 (Reserved)

3.9 System characteristics of airborne ADF receiving systems

3.9.1 Accuracy of bearing indication

3.9.1.1 The bearing given by the ADF system shall not be in error by more than plus or minus 5 degrees with a radio signal from any direction having a field strength of 70 microvolts per metre or more radiated from an LF/MF NDB or locator operating within the tolerances permitted by this Annex and in the presence also of an unwanted signal from a direction 90 degrees from the wanted signal and:

a) on the same frequency and 15 dB weaker; or

b) plus or minus 2 kHz away and 4 dB weaker; or

c) plus or minus 6 kHz or more away and 55 dB stronger.

Note.— The above bearing error is exclusive of aircraft magnetic compass error.

3.10 (Reserved)

3.11 Microwave landing system (MLS) characteristics

3.11.1 Definitions

Auxiliary data. Data, transmitted in addition to basic data, that provide ground equipment siting information for use in refining airborne position calculations and other supplementary information.

Basic data. Data transmitted by the ground equipment that are associated directly with the operation of the landing guidance system.

Beam centre. The midpoint between the two minus 3-dB points on the leading and trailing edges of the scanning beam main lobe.

Beamwidth. The width of the scanning beam main lobe measured at the minus 3-dB points and defined in angular units on the boresight, in the horizontal plane for the azimuth function and in the vertical plane for the elevation function.

Clearance guidance sector. The volume of airspace, inside the coverage sector, within which the azimuth guidance information provided is not proportional to the angular displacement of the aircraft, but is a constant left or right indication of which side the aircraft is with respect to the proportional guidance sector.

Control motion noise (CMN). That portion of the guidance signal error which causes control surface, wheel and column motion and could affect aircraft attitude angle during coupled flight, but does not cause aircraft displacement from the desired course and/or glide path. (See 3.5.)

Coordinate system — conical. A function is said to use conical coordinates when the decoded guidance angle varies as the minimum angle between the surface of a cone containing the receiver antenna, and a plane perpendicular to the axis of the cone and passing through its apex. The apex of the cone is at the antenna phase centre. For approach azimuth or back azimuth functions, the plane is the vertical plane containing the runway centre line. For elevation functions, the plane is horizontal.

Coordinate system — planar. A function is said to use planar coordinates when the decoded guidance angle varies as the angle between the plane containing the receiver antenna and a reference plane. For azimuth functions, the reference plane is the vertical plane containing the runway centre line and the plane containing the receiver antenna is a vertical plane passing through the antenna phase centre.

Coverage sector. A volume of airspace within which service is provided by a particular function and in which the signal power density is equal to or greater than the specified minimum.

DME/P. The distance measuring element of the MLS, where the "P" stands for precise distance measurement. The spectrum characteristics are those of DME/N.

Function. A particular service provided by the MLS, e.g. approach azimuth guidance, back azimuth guidance or basic data, etc.

Mean course error. The mean value of the azimuth error along the runway extended centre line.

Mean glide path error. The mean value of the elevation error along the glide path of an elevation function.

Minimum glide path. The lowest angle of descent along the zero degree azimuth that is consistent with published approach procedures and obstacle clearance criteria.

Note.— This is the lowest elevation angle which has been approved and promulgated for the instrument runway.

MLS antenna boresight. The plane passing through the antenna phase centre perpendicular to the horizontal axis contained in the plane of the antenna array.

Note.— In the azimuth case, the boresight of the antenna and the zero degree azimuth are normally aligned. However, the preferred designation in a technical context is "boresight" whereas the preferred designation in an operational context is "zero degree azimuth" (see definition below).

MLS azimuth. The locus of points in any horizontal plane where the decoded guidance angle is constant.

MLS approach reference datum. A point at a specified height above the intersection of the runway centre line and the threshold.

MLS back azimuth reference datum. A point at a specified height above the runway centre line at the runway midpoint.

MLS datum point. The point on the runway centre line closest to the phase centre of the approach elevation antenna.

MLS elevation. The locus of points in any vertical plane where the decoded guidance angle is constant.

MLS zero degree azimuth. The MLS azimuth where the decoded guidance angle is zero degrees.

Out-of-coverage indication signal. A signal radiated into areas outside the intended coverage sector where required to specifically prevent invalid removal of an airborne warning indication in the presence of misleading guidance information.

Path following error (PFE). That portion of the guidance signal error which could cause aircraft displacement from the desired course and/or glide path.

Path following noise (PFN). That portion of the guidance signal error which could cause aircraft displacement from the mean course line or mean glide path as appropriate.

Proportional guidance sector. The volume of airspace within which the angular guidance information provided by a function is directly proportional to the angular displacement of the airborne antenna with respect to the zero angle reference.

3.11.2 General

3.11.2.1 MLS is a precision approach and landing guidance system which provides position information and various ground to air data. The position information is provided in a wide coverage sector and is determined by an azimuth angle measurement, an elevation angle measurement and a range (distance) measurement.

Note.— Unless specifically indicated as the MLS airborne equipment, the text in 3.11 refers to the MLS ground equipment.

3.11.3 MLS configurations

3.11.3.1 *Basic MLS.* The basic configuration of the MLS shall be composed of the following:

a) approach azimuth equipment, associated monitor, remote control and indicator equipment;

b) approach elevation equipment, associated monitor, remote control and indicator equipment;

c) a means for the encoding and transmission of essential data words, associated monitor, remote control and indicator equipment;

Note.— The essential data are those basic and essential auxiliary data words specified in 3.11.5.4.

d) DME/N, associated monitor, remote control and indicator equipment.

3.11.3.2 **Recommendation.—** *If precise ranging information throughout the azimuth coverage sector is required, the option of DME/P, conforming to the Standards of Chapter 3, 3.5 should be applied.*

Note.— DME is the MLS ranging element and is expected to be installed as soon as possible. However, marker beacons installed for ILS may be used temporarily with MLS while ILS service is maintained at the same runway.

3.11.3.3 *Expanded MLS configurations.* It shall be permissible to derive expanded configurations from the basic MLS, by addition of one or more of the following functions or characteristic improvements:

a) back azimuth equipment, associated monitor, remote control and indicator equipment;

b) flare elevation equipment, associated monitor, remote control and indicator equipment;

c) DME/P, associated monitor, remote control and indicator equipment;

d) a means for the encoding and transmission of additional auxiliary data words, associated monitor, remote control and indicator equipment;

e) a wider proportional guidance sector exceeding the minimum specified in 3.11.5.

Note 1.— Although the Standard has been developed to provide for flare elevation function, this function is not implemented and is not intended for future implementation.

Note 2.— The MLS signal format allows further system growth to include additional functions, such as 360 degrees azimuth.

3.11.3.4 *Simplified MLS configurations*. It shall be permissible to derive simplified configurations from the basic MLS (3.11.3.1), by relaxation of characteristics as follows:

a) an approach azimuth coverage provided in approach region (3.11.5.2.2.1.1) only;

b) an approach azimuth and elevation coverage (3.11.5.2.2 and 3.11.5.3.2) not extending below a height of 30 m (100 ft) above the threshold;

c) accuracy limits for PFE and PFN expanded to be not greater than 1.5 times the values specified in 3.11.4.9.4 for approach azimuth guidance and in 3.11.4.9.6 for elevation guidance;

d) ground equipment contribution to the mean course error and to the mean glide path error expanded to be 1.5 times the values specified in 3.11.5.2.5 and 3.11.5.3.5, respectively;

e) CMN requirements (3.11.4.9.4 and 3.11.4.9.6) waived; and

f) monitor and control action period (3.11.5.2.3 and 3.11.5.3.3) expanded to a six-second period.

Note.— Guidance material on application of the simplified MLS configurations is provided in Attachment G, 15.

3.11.4 Signal-in-space characteristics — angle and data functions

3.11.4.1 *Channelling*

3.11.4.1.1 *Channel arrangement.* The MLS angle and data functions shall operate on any one of the 200 channels assigned on the frequencies from 5 031.0 MHz to 5 090.7 MHz as shown in Table A.

3.11.4.1.1.1 Channel assignments in addition to those specified in 3.11.4.1.1 shall be made within the 5 030.4 to 5 150.0 MHz sub-band as necessary to satisfy future air navigation requirements.

3.11.4.1.2 *Channel pairing with DME.* The channel pairing of the angle and data channel with the channel of the ranging function shall be in accordance with Table A.

3.11.4.1.3 *Frequency tolerance.* The operating radio frequency of the ground equipment shall not vary more than plus or minus 10 kHz from the assigned frequency. The frequency stability shall be such that there is no more than a plus or minus 50 Hz deviation from the nominal frequency when measured over a one-second interval.

3.11.4.1.4 *Radio frequency signal spectrum*

3.11.4.1.4.1 The transmitted signal shall be such that, during the transmission time, the mean power density above a height of 600 m (2 000 ft) shall not exceed –94.5 dBW/m^2 for angle guidance or data signals, as measured in a 150 kHz bandwidth centred 840 kHz or more from the nominal frequency.

3.11.4.1.4.2 The transmitted signal shall be such that, during the transmission time, the mean power density beyond a distance of 4 800 m (2.6 NM) from any antennas and for a height below 600 m (2 000 ft) shall not exceed –94.5 dBW/m² for angle guidance or data signals, as measured in a 150 kHz bandwidth centred 840 kHz or more from the nominal frequency.

Note 1.— Requirements in 3.11.4.1.4.2 are applicable when the operational coverage of another MLS ground station has overlap with the radio-horizon of the considered ground station.

Note 2.— Guidance material on MLS frequency planning is provided in Attachment G, 9.3.

3.11.4.2 *Polarization.* The radio frequency transmissions from all ground equipment shall be nominally vertically polarized. The effect of any horizontally polarized component shall not cause the guidance information to change by more than 40 per cent of the PFE allowed at that location with the airborne antenna rotated 30 degrees from the vertical position or cause the PFE limit to be exceeded.

3.11.4.3 *Time-division-multiplex (TDM) organization*

3.11.4.3.1 Both angle information and data shall be transmitted by TDM on a single radio frequency channel.

3.11.4.3.2 *Synchronization.* The transmissions from the various angle and data ground equipment serving a particular runway shall be time synchronized to assure interference-free operations on the common radio frequency channel of operation.

3.11.4.3.3 *Function rates.* Each function transmitted shall be repeated at the rates shown in the following table:

Function	*Average rate (Hz) measured over any 10-second period*
Approach azimuth guidance	13 ± 0.5
High rate approach azimuth guidance	39 ± 1.5
Back azimuth guidance	6.5 ± 0.25
Approach elevation guidance	39 ± 1.5
Flare elevation guidance	39 ± 1.5
Basic data	see Appendix A, Table A-7
Auxiliary data	see Appendix A, Tables A-10 and A-12

3.11.4.3.3.1 **Recommendation.—** *When the proportional guidance sector is not greater than plus or minus 40 degrees and a need for flare elevation or other growth functions at that facility is not anticipated, the high rate approach azimuth function should be used.*

Note.— Application information is contained in Attachment G, 2.3.3.

3.11.4.3.4 *Function timing.* Timing standards for each angle and data function shall be as specified in Appendix A, Tables A-1 through A-6 and A-8. The ground equipment internal timing accuracy of each listed event including jitter shall be the specified nominal value plus or minus 2 microseconds. The timing jitter shall be less than 1 microsecond root mean square (RMS).

Note 1.— The timing of each listed event indicates the beginning of the event time slot and the end of the previous event time slot. The characteristics and timing of the actual transmissions are as specified in the applicable paragraphs.

Note 2.— Information on the measurement of the timing accuracy is contained in Attachment G, 2.2.2.

3.11.4.3.5 *Function sequence.* The time interval between repetitive transmissions of any one function shall be varied in a manner which provides protection from synchronous interference.

Note 1.— Each function transmission is an independent entity which can occur in any position in the TDM sequence (with the exception that back azimuth must be preceded by basic data word 2).

Note 2.— Some sequences which have demonstrated protection from synchronous interference are illustrated in Attachment G, 2.1.4.

3.11.4.4 *Preamble*

3.11.4.4.1 A preamble signal shall be transmitted throughout the applicable coverage sector to identify the particular function to follow. The preamble shall consist of a radio frequency carrier acquisition period, a receiver reference time code, and a function identification code. The timing of the preamble transmissions shall be as specified in Appendix A, Table A-1.

3.11.4.4.2 *Carrier acquisition.* The preamble transmission shall begin with a period of unmodulated radio frequency carrier as specified in Appendix A, Table A-1.

3.11.4.4.3 *Modulation and coding*

3.11.4.4.3.1 *Differential phase shift keying (DPSK).* The preamble codes and the basic and auxiliary data signals specified in 3.11.4.8 shall be transmitted by DPSK of the radio frequency carrier. A "zero" shall be represented by a 0 degrees plus or minus 10 degrees phase shift and a "one" shall be represented by a 180 degrees plus or minus 10 degrees phase shift. The modulation rate shall be 15 625 bauds. The internal timing accuracy of the DPSK transition shall be as specified in 3.11.4.3.4. There shall be no amplitude modulation applied during the phase transition. The transition time shall not exceed 10 microseconds, and the phase shall advance or retard monotonically throughout the transition region.

3.11.4.4.3.2 *Receiver reference time.* All preambles shall contain the receiver reference time code, 11101 (bits I_1 to I_5). The time of the last phase transition midpoint in the code shall be the receiver reference time. The receiver reference time code shall be validated by decoding a valid function identification immediately following the receiver reference time code.

3.11.4.4.3.3 *Function identification.* A code for function identification shall follow the receiver reference time code. This code shall consist of the five information bits (I_6 to I_{10}) allowing identification of 31 different functions, plus two parity bits (I_{11} and I_{12}) as shown in the following table:

	Code						
Function	I_6	I_7	I_8	I_9	I_{10}	I_{11}	I_{12}
Approach azimuth	0	0	1	1	0	0	1
High rate approach azimuth	0	0	1	0	1	0	0
Approach elevation	1	1	0	0	0	0	1
Flare elevation	0	1	1	0	0	0	1
Back azimuth	1	0	0	1	0	0	1
360° azimuth	0	1	0	0	1	0	1

	Code						
Function	I_6	I_7	I_8	I_9	I_{10}	I_{11}	I_{12}
Basic data 1	0	1	0	1	0	0	0
Basic data 2	0	1	1	1	1	0	0
Basic data 3	1	0	1	0	0	0	0
Basic data 4	1	0	0	0	1	0	0
Basic data 5	1	1	0	1	1	0	0
Basic data 6	0	0	0	1	1	0	1
Auxiliary data A	1	1	1	0	0	1	0
Auxiliary data B	1	0	1	0	1	1	1
Auxiliary data C	1	1	1	1	0	0	0

Note.— The function identification codes have been chosen so that parity bits I_{11} and I_{12} satisfy the equations:

$$I_6 + I_7 + I_8 + I_9 + I_{10} + I_{11} = \text{EVEN}$$

$$I_6 + I_8 + I_{10} + I_{12} = \text{EVEN}$$

3.11.4.5 *Angle guidance parameters.* Angle guidance information shall be encoded by the amount of time separation between the centres of the received TO and FRO scanning beam main lobes. The coding shall be interpreted in the airborne equipment as a linear function of time as follows:

$$\theta = (T_0 - t)\, V/2$$

where:

θ = Azimuth or elevation guidance angle in degrees

t = Time separation in microseconds between TO and FRO beam centres

T_0 = Time separation in microseconds between TO and FRO beam centres corresponding to zero degrees

V = Scan velocity scaling constant in degrees per microsecond.

3.11.4.5.1 The values of the angle guidance parameters shall be as shown in the following table:

Function	*Maximum scan angle (degrees)*	*Value of t for maximum scan angle (μs)*	*T_0 (μs)*	*V (degrees /μs)*
Approach azimuth	–62 to +62	13 000	6 800	0.020
High rate approach azimuth	–42 to +42	9 000	4 800	0.020
Back azimuth	–42 to +42	9 000	4 800	–0.020
Approach elevation	–1.5 to +29.5	3 500	3 350	0.020
Flare elevation	–2 to +10	3 200	2 800	0.010

Note 1.— Between the end of the TO scan and the beginning of the FRO scan there is a pause time of no radiation of appropriate duration. Additional information is provided in Attachment G, 2.2.1.

Note 2.— The maximum scan angles shown recognize that the scan angle must exceed the proportional guidance sector limit by at least one half of the width of the detected scanning beam envelope (in equivalent angle) to allow successful decoding.

3.11.4.5.2 The tolerances on the ground equipment scanning beam velocity and the time separation between TO and FRO pulses corresponding to zero degrees shall be sufficient to satisfy the accuracy requirements specified in 3.11.4.9.

3.11.4.5.3 The TO and FRO scan transmissions shall be symmetrically disposed about the mid-scan point listed in each of Tables A-2 through A-5 of Appendix A. The mid-scan point and the centre of the time interval between the TO and FRO scan transmissions shall coincide with a tolerance of plus or minus 10 microseconds.

3.11.4.6 *Azimuth guidance functions*

3.11.4.6.1 Each transmission of a guidance angle shall consist of a clockwise TO scan followed by a counterclockwise FRO scan as viewed from above the antenna. For approach azimuth functions, increasing angle values shall be in the direction of the TO scan. For the back azimuth functions, increasing angle values shall be in the direction of the FRO scan.

Note.— A diagram illustrating the scanning conventions is provided in Attachment G, 2.3.1.

3.11.4.6.2 *Sector signals.* The transmission format of any azimuth function shall include time slots for airborne antenna selection, out-of-coverage indication, and test pulses as specified in Appendix A, Tables A-2 and A-3. The internal timing accuracy of the sector signals shall conform to the internal timing accuracy of the DPSK transitions specified in 3.11.4.3.4.

3.11.4.6.2.1 *Ground equipment identification.* The MLS providing services for a particular runway shall be identified by a four-character alphabetic designator starting with the letter M. This designator less the first letter shall be transmitted as a digital word as listed in Appendix A, Table A-7.

Note.— It is not required that MLS ground equipment will transmit identification outside the angle guidance coverage sectors. If MLS channel identification is operationally required outside angle guidance coverage sectors, it may be derived from associated omnidirectional DME. (See 3.11.5.5.2 and Attachment G, 8.2.)

3.11.4.6.2.1.1 The signal shall be transmitted on the data channel into the approach and back azimuth coverage regions.

3.11.4.6.2.1.2 The code bit in the time slot previously allocated for the alternate (Morse code) ground equipment identification following the azimuth preamble shall be fixed in the “ZERO” state.

3.11.4.6.2.2 *Airborne antenna selection signal.* A signal for airborne antenna selection shall be transmitted as a “zero” DPSK signal lasting for a six-bit period. The signal shall be available throughout the coverage sector in which approach or back azimuth guidance is provided.

Note.— The signal provides an opportunity for the selection of the most appropriate antenna in a multiple antenna airborne installation.

3.11.4.6.2.3 *Azimuth out-of-coverage indication pulses.* Where out-of-coverage indication pulses are used, they shall be:

a) greater than any guidance signal in the out-of-coverage sector;

b) at least 5 dB less than the fly-left (fly-right) clearance level within the fly-left (fly-right) clearance sector; and

c) at least 5 dB less than the scanning beam level within the proportional coverage region.

The duration of each pulse measured at the half amplitude point shall be at least 100 microseconds, and the rise and fall times shall be less than 10 microseconds.

3.11.4.6.2.3.1 If desired, it shall be permissible to sequentially transmit two pulses in each out-of-coverage indication time slot. Where the pulse pairs are used, the duration of each pulse shall be at least 50 microseconds and the rise and fall times shall be less than 10 microseconds.

3.11.4.6.2.3.2 The transmissions of out-of-coverage indication pulses radiated from antennas with overlapping coverage patterns shall be separated by at least 10 microseconds.

3.11.4.6.2.4 *Ground radiated test signals*

Note.— Time has been reserved in the azimuth angle guidance signal formats for the future use of a ground radiated test signal.

3.11.4.6.2.5 *Clearance guidance.* Where the proportional guidance sector provided is less than the minimum coverage specified in 3.11.5.2.2.1.1 a) and 3.11.5.2.2.2 a), clearance guidance shall be provided to supplement the coverage sector by the transmission of fly-left/fly-right clearance pulses in the formats for the approach azimuth, high rate approach azimuth and back azimuth functions. Alternatively, it shall be permissible to provide clearance guidance by permitting the scanning beam to scan beyond the designated proportional guidance sector to provide fly-left or fly-right clearance information as appropriate when the decoded angle exceeds the designated limits of proportional guidance coverage.

3.11.4.6.2.5.1 Clearance guidance information shall be provided by transmitting pairs of pulses within the angle scan time slots. One pair shall consist of one pulse adjacent to the start time of the scanning beam TO scan and one pulse adjacent to the stop time of the FRO scan. A second pair shall consist of one pulse adjacent to the stop time of the scanning beam TO scan, and one pulse adjacent to the start time of the FRO scan. The fly-right clearance pulses shall represent positive angles and the fly-left clearance pulses shall represent negative angles. The duration of each clearance pulse shall be 50 microseconds with a tolerance of plus or minus 5 microseconds. The transmitter switching time between the clearance pulses and the scanning beam transmissions shall not exceed 10 microseconds. The rise time at the edge of each clearance pulse not adjacent to the scanning beam shall be less than 10 microseconds.

3.11.4.6.2.5.2 The signal-in-space characteristics of the clearance guidance pulses shall be as follows:

a) within the fly-right clearance guidance sector, the fly-right clearance guidance signal shall exceed the scanning beam side lobes and all other guidance and out-of-coverage indication signals by at least 5 dB;

b) within the fly-left clearance guidance sector, the fly-left clearance guidance signal shall exceed the scanning beam side lobes and all other guidance and out-of-coverage indication signals by at least 5 dB;

c) within the proportional guidance sector, the clearance guidance signals shall be at least 5 dB below the scanning beam main lobe.

3.11.4.6.2.5.3 The power density of the clearance signal shall be as required in 3.11.4.10.1.

Note 1.— Attachment G, 2.3.4 contains guidance information on the following:

a) clearance and scanning beam timing arrangements;

b) pulse envelopes in the transition regions between clearance and scanning beam signals;

c) clearance (fly-right/fly-left) convention changes.

Note 2.— The proportional coverage limits are transmitted in basic data as specified in 3.11.4.8.2.

3.11.4.7 *Elevation guidance functions*

3.11.4.7.1 *Scanning conventions.* For the approach elevation function, increasing elevation guidance angles shall be in the upward direction. Zero elevation angle shall coincide with a horizontal plane through the respective antenna phase centre. Each guidance angle transmission shall consist of a TO scan followed by a FRO scan. The TO scan shall be in the direction of increasing angle values.

3.11.4.7.2 *Sector signal.* Provision for transmission of one out-of-coverage indication pulse shall be made in the format for the approach elevation function. Where an out-of-coverage indication pulse is used, it shall be: (1) greater than any guidance signal in the out-of-coverage indication sector and (2) at least 5 dB less than the guidance signals within the guidance sector. The elevation out-of-coverage indication timing shall be as shown in Appendix A, Table A-4. The duration of each pulse measured at the half amplitude points shall be at least 100 microseconds, and the rise and fall times shall be less than 10 microseconds.

3.11.4.7.2.1 If desired, it shall be permissible to sequentially transmit two pulses in each obstacle clearance indication time slot. Where pulse pairs are used, the duration of each pulse shall be at least 50 microseconds, and the rise and fall times shall be less than 10 microseconds.

3.11.4.8 *Data functions.* Provision shall be made in the MLS signal format for the transmission of basic data and auxiliary data.

Note.— Ground equipment data coverage and monitoring requirements are specified in 3.11.5.4.

3.11.4.8.1 *Data transmission.* Data shall be transmitted as specified in 3.11.4.4.3.1.

3.11.4.8.2 *Basic data structure and timing.* Basic data shall be encoded as 32-bit words consisting of a function preamble (12 bits) specified in 3.11.4.4, and data content as specified in Appendix A, Table A-7. The timing of the basic data words shall be as specified in Appendix A, Table A-6. The content, maximum interval between transmission of the same word and organization of the words shall be as specified in Appendix A, Table A-7. Data containing digital information shall be transmitted with the least significant bit first. The smallest binary number shall represent the lower absolute range limit with increments in binary steps to the upper absolute range limit specified in Appendix A, Table A-7.

3.11.4.8.2.1 *Basic data contents.* The data items specified in Appendix A, Table A-7 shall be defined as follows:

a) *Approach azimuth antenna to threshold distance* shall represent the minimum distance between the approach azimuth antenna phase centre to the vertical plane perpendicular to the centre line which contains the runway threshold.

b) *Approach azimuth proportional coverage limit* shall represent the limit of the sector in which proportional approach azimuth guidance is transmitted.

c) *Clearance signal type* shall indicate the method of providing the azimuth clearance signal.

d) *Minimum glide path* shall represent the lowest angle of descent along the zero-degree azimuth as defined in 3.11.1.

e) *Back azimuth status* shall represent the operational status of the back azimuth equipment.

f) *DME status* shall represent the operational status of the DME equipment.

g) *Approach azimuth status* shall represent the operational status of the approach azimuth equipment.

h) *Approach elevation status* shall represent the operational status of the approach elevation equipment.

i) *Beamwidth* shall represent, for a particular function, the antenna beamwidth as defined in 3.11.1.

j) *DME distance* shall represent the minimum distance between the DME antenna phase centre and the vertical plane perpendicular to the runway centre line which contains the MLS datum point.

k) *Approach azimuth magnetic orientation* shall represent the angle measured in the horizontal plane clockwise from Magnetic North to the zero-degree approach azimuth, originating from the approach azimuth antenna. The vertex of the measured angle shall be the approach azimuth antenna phase centre.

l) *Back azimuth magnetic orientation* shall represent the angle measured in the horizontal plane clockwise from Magnetic North to the zero-degree back azimuth, originating from the back azimuth antenna. The vertex of the measured angle shall be the back azimuth antenna phase centre.

m) *Back azimuth proportional coverage limit* shall represent the limit of the sector in which proportional back azimuth guidance is transmitted.

n) *MLS ground equipment identification* shall represent the last three characters of the system identification specified in 3.11.4.6.2.1. The characters shall be encoded in accordance with International Alphabet No. 5 (IA-5) using bits b_1 through b_6.

Note 1.— International Alphabet No. 5 (IA-5) is defined in Annex 10, Volume III.

Note 2.— Bit b_7 of this code may be reconstructed in the airborne receiver by taking the complement of bit b_6.

3.11.4.8.3 *Auxiliary data organization and timing.* Auxiliary data shall be organized into 76-bit words consisting of the function preamble (12 bits) as specified in 3.11.4.4, the address (8 bits) as specified in Appendix A, Table A-9, and data content and parity (56 bits) as specified in Appendix A, Tables A-10, A-11, A-12, A-13 and A-15. Three function identification codes are reserved to indicate transmission of auxiliary data A, auxiliary data B and auxiliary data C. The timing of the auxiliary data function shall be as specified in Appendix A, Table A-8. Two auxiliary data word formats shall be provided, one for digital data and one for alphanumeric character data. Data containing digital information shall be transmitted with the least significant bit first. Alpha characters in data words B1 through B39 shall be encoded in accordance with International Alphabet No. 5 (IA-5) using bits b_1 to b_5 with b_1 transmitted first. Alphanumeric data characters in other data words shall be encoded in accordance with IA-5 using seven information bits, plus one even parity bit added to each character. Alphanumeric data shall be transmitted in the order in which they are to be read. The serial transmission of a character shall be with the lower order bit transmitted first and the parity bit transmitted last.

Note 1.— International Alphabet No. 5 (IA-5) is defined in Annex 10, Volume III.

Note 2.— Auxiliary data A contents are specified in 3.11.4.8.3.1. Auxiliary data B contents are specified in 3.11.4.8.3.2. Auxiliary data C contents are reserved for national use.

3.11.4.8.3.1 *Auxiliary data A content.* The data items contained in auxiliary data words A1 through A4 as specified in Appendix A, Table A-10 shall be defined as follows:

a) *Approach azimuth antenna offset* shall represent the minimum distance between the approach azimuth antenna phase centre and a vertical plane containing the runway centre line.

b) *Approach azimuth antenna to MLS datum point distance* shall represent the minimum distance between the approach azimuth antenna phase centre and the vertical plane perpendicular to the runway centre line which contains the MLS datum point.

c) *Approach azimuth alignment with runway centre line* shall represent the minimum angle between the zero-degree approach azimuth and the runway centre line.

d) *Approach azimuth antenna coordinate system* shall represent the coordinate system (planar or conical) of the angle data transmitted by the approach azimuth antenna.

Note.— Although the above Standard has been developed to provide for alternate coordinate systems, the planar coordinate system is not implemented and it is not intended for future implementation.

e) *Approach azimuth antenna height* shall represent the vertical location of the antenna phase centre with respect to the *MLS datum point.*

f) *Approach elevation antenna offset* shall represent the minimum distance between the elevation antenna phase centre and a vertical plane containing the runway centre line.

g) *MLS datum point to threshold distance* shall represent the distance measured along the runway centre line from the MLS datum point to the runway threshold.

h) *Approach elevation antenna height* shall represent the vertical location of the elevation antenna phase centre with respect to the MLS datum point.

i) *MLS datum point elevation* shall represent the datum point elevation relative to mean sea level (msl).

j) *Runway threshold height* shall represent the vertical location of the intersection of the runway threshold and centre line with respect to the MLS datum point.

k) *DME offset* shall represent the minimum distance between the DME antenna phase centre and a vertical plane containing the runway centre line.

l) *DME to MLS datum point distance* shall represent the minimum distance between the DME antenna phase centre and the vertical plane perpendicular to the runway centre line which contains the MLS datum point.

m) *DME antenna height* shall represent the vertical location of the antenna phase centre with respect to the MLS datum point.

n) *Runway stop-end distance* shall represent the distance along centre line between the runway stop-end and the MLS datum point.

o) *Back azimuth antenna offset* shall represent the minimum distance between the back azimuth antenna phase centre and a vertical plane containing the runway centre line.

p) *Back azimuth to MLS datum point distance* shall represent the minimum distance between the back azimuth antenna and the vertical plane perpendicular to the runway centre line which contains the MLS datum point.

q) *Back azimuth alignment with runway centre line* shall represent the minimum angle between the zero-degree back azimuth and the runway centre line.

r) *Back azimuth antenna coordinate system* shall represent the coordinate system (planar or conical) of the angle data transmitted by the back azimuth antenna.

Note.— Although the above Standard has been developed to provide for alternate coordinate systems, the planar coordinate system is not implemented and it is not intended for future implementation.

s) *Back azimuth antenna height* shall represent the vertical location of the antenna phase centre with respect to the MLS datum point.

Note.— It is intended that no additional auxiliary data A words be defined.

3.11.4.8.3.2 Auxiliary data B content. Auxiliary data B words shall be defined as specified in Appendix A, Tables A-11 and A-13.

3.11.4.8.3.2.1 *Microwave landing system/area navigation (MLS/RNAV) procedure data.* Where required, auxiliary data words B1 through B39 shall be used to transmit data to support MLS/RNAV procedures. It shall be permissible to divide this procedure data into two separate databases: one for transmission in the approach azimuth sector, the other for transmission in the back azimuth sector. Data for each procedure shall be transmitted in the database for the coverage sector in which the procedure commences. Missed approach procedure data shall be included in the database containing the associated approach procedure.

3.11.4.8.3.2.2 *Procedure database structure.* Where used, each procedure database shall be constructed as follows:

a) a map/CRC word shall identify the size of the database, the number of procedures defined, and the cyclic redundancy check (CRC) code for validation of the database;

b) procedure descriptor words shall identify all named approach and departure procedures within the database; and

c) way-point data words shall define the location and sequence of way-points for the procedures.

Note.— The structure and coding of auxiliary B words B1 through B39 are defined in Appendix A, Tables A-14 through A-17. Guidance material concerning the coding of MLS/RNAV procedures is given in Attachment G.

3.11.4.9 *System accuracy.* The accuracy standards specified herein shall be met on a 95 per cent probability basis unless otherwise stated.

Note 1.— The overall error limits include errors from all causes such as those from airborne equipment, ground equipment, and propagation effects.

Note 2.— It is intended that the error limits are to be applied over a flight path interval that includes the approach reference datum or back azimuth reference datum. Information on the interpretation of MLS errors and the measurement of these errors over an interval appropriate for flight inspection is provided in Attachment G, 2.5.2.

Note 3.— To determine the allowable errors for degradation allowances at points other than the appropriate reference datum, the accuracy specified at the reference datum should first be converted from its linear value into its equivalent angular value with an origin at the antenna.

3.11.4.9.1 *MLS approach reference datum.* The height of the MLS approach reference datum shall be 15 m (50 ft). A tolerance of plus 3 m (10 ft) shall be permitted.

Note 1.— The operational objective of defining the height of the MLS approach reference datum is to ensure safe guidance over obstructions and also safe and efficient use of the runway served. The heights noted in 3.11.4.9.1 assume Code 3 or Code 4 runways as defined by Annex 14.

Note 2.— At the same time, the reference datum is to provide a convenient point at which the accuracy and other parameters of the function may be specified.

Note 3.— In arriving at the above height values for the MLS approach reference datum, a maximum vertical distance of 5.8 m (19 ft) between the path of the aircraft MLS antenna selected for final approach and the path of the lowest part of the wheels at the threshold was assumed. For aircraft exceeding this criterion, appropriate steps may have to be taken either to maintain adequate clearance at threshold or to adjust the permitted operating minima.

3.11.4.9.2 *MLS back azimuth reference datum.* The height of the MLS back azimuth reference datum shall be 15 m (50 ft). A tolerance of plus 3 m (10 ft) shall be permitted.

Note.— The objective of defining the MLS back azimuth reference datum is to provide a convenient point at which the accuracy and other parameters of the function may be specified.

3.11.4.9.3 The PFE shall be comprised of those frequency components of the guidance signal error at the output of the airborne receiver which lie below 0.5 rad/s for azimuth guidance information or below 1.5 rad/s for elevation guidance information. The control motion noise shall be comprised of those frequency components of the guidance signal error at the output of the airborne receiver which lie above 0.3 rad/s for azimuth guidance or above 0.5 rad/s for elevation guidance information. The output filter corner frequency of the receiver used for this measurement is 10 rad/s.

3.11.4.9.4 *Approach azimuth guidance functions.* Except as allowed for simplified MLS configurations in 3.11.3.4, at the approach reference datum, the approach azimuth function shall provide performance as follows:

a) the PFE shall not be greater than plus or minus 6 m (20 ft);

b) the PFN shall not be greater than plus or minus 3.5 m (11.5 ft);

c) the CMN shall not be greater than plus or minus 3.2 m (10.5 ft) or 0.1 degree, whichever is less.

3.11.4.9.4.1 **Recommendation.—** *At the approach reference datum, the PFE should not be greater than plus or minus 4 m (13.5 ft).*

3.11.4.9.4.2 The linear accuracy specified at the reference datum shall be maintained throughout the runway coverage region specified in 3.11.5.2.2.1.2 except where degradation is allowed as specified in 3.11.4.9.4.3.

3.11.4.9.4.3 *Degradation allowance.* Except as allowed for simplified MLS configurations in 3.11.3.4, the approach azimuth angular PFE, PFN and CMN shall be allowed to degrade linearly to the limits of coverage as follows:

a) *With distance.* The PFE limit and PFN limit, expressed in angular terms at 37 km (20 NM) from the runway threshold along the extended runway centre line, shall be 2 times the value specified at the approach reference datum. The CMN limit shall be 0.1 degree at 37 km (20 NM) from the approach reference datum along the extended runway centre line at the minimum glide path angle.

b) *With azimuth angle.* The PFE limit and PFN limit, expressed in angular terms at plus or minus 40 degrees azimuth angle, shall be 1.5 times the value on the extended runway centre line at the same distance from the approach reference datum. The CMN limit, expressed in angular terms at plus or minus 40 degrees azimuth angle is 1.3 times the value on the extended runway centre line at the same distance from the approach reference datum.

c) *With elevation angle.* The PFE limit and PFN limit shall not degrade up to an elevation angle of 9 degrees. The PFE limit and PFN limit, expressed in angular terms at an elevation angle of 15 degrees from the approach azimuth antenna phase centre, shall be 2 times the value permitted below 9 degrees at the same distance from the approach reference datum and the same azimuth angle. The CMN limit shall not degrade with elevation angle.

d) *Maximum CMN.* The CMN limits shall not exceed 0.2 degree in any region of coverage.

3.11.4.9.4.3.1 **Recommendation.—** *The CMN should not exceed 0.1 degree in any region of coverage.*

3.11.4.9.4.4 *Maximum angular PFE and PFN.* Except as allowed for simplified MLS configurations in 3.11.3.4, in any region within coverage, the angular error limits shall be as follows:

a) the PFE shall not exceed plus or minus 0.25 degree; and

b) the PFN shall not exceed plus or minus 0.15 degree.

3.11.4.9.5 *Back azimuth guidance function.* At the back azimuth reference datum, the back azimuth function shall provide performance as follows:

a) the PFE shall not be greater than plus or minus 6 m (20 ft);

b) the PFN component shall not be greater than plus or minus 3.5 m (11.5 ft);

c) the CMN shall not be greater than plus or minus 3.2 m (10.5 ft) or 0.1 degree, whichever is less.

3.11.4.9.5.1 *Degradation allowance.* The back azimuth angular PFE, PFN and CMN shall be allowed to degrade linearly to the limits of coverage as follows:

a) *With distance.* The PFE limit and PFN limit, expressed in angular terms at the limit of coverage along the extended runway centre line, shall be 2 times the value specified at the back azimuth reference datum. The CMN limit, expressed in angular terms at 18.5 km (10 NM) from the runway stop end along the extended runway centre line, shall be 1.3 times the value specified at the back azimuth reference datum.

b) *With azimuth angle.* The PFE limit and PFN limit, expressed in angular terms at plus or minus 20 degrees azimuth angle, shall be 1.5 times the value on the extended runway centre line at the same distance from the back azimuth reference datum. The CMN limit, expressed in angular terms at plus or minus 20 degrees azimuth angle, shall be 1.3 times the value on the extended runway centre line at the same distance from the back azimuth reference datum.

c) *With elevation angle.* The PFE limit and PFN limit shall not degrade up to an elevation angle of 9 degrees. The PFE limit and PFN limit, expressed in angular terms at an elevation angle of 15 degrees from the back azimuth antenna phase centre, shall be 2 times the value permitted below 9 degrees at the same distance from the back azimuth reference datum and the same azimuth angle. The CMN limit shall not degrade with elevation angle.

d) *Maximum CMN.* The CMN limits shall not exceed 0.2 degree in any region of coverage.

3.11.4.9.5.2 *Maximum angular PFE and PFN.* In any region within coverage, the angular error limits shall be as follows:

a) the PFE shall not exceed plus or minus 0.50 degree; and

b) the PFN shall not exceed plus or minus 0.30 degree.

3.11.4.9.6 *Elevation guidance function.* For equipment sited to provide a minimum glide path of nominally 3 degrees or lower, except as allowed for simplified MLS configurations in 3.11.3.4, the approach elevation function shall provide performance at the approach reference datum as follows:

a) the PFE shall not be greater than plus or minus 0.6 m (2 ft);

b) the PFN shall not be greater than plus or minus 0.4 m (1.3 ft);

c) the CMN shall not be greater than plus or minus 0.3 m (1 ft).

3.11.4.9.6.1 *Degradation allowance.* Except as allowed for simplified MLS configurations in 3.11.3.4, the approach elevation angular PFE, PFN and CMN shall be allowed to degrade linearly to the limits of coverage as follows:

a) *With distance.* The PFE limit and PFN limit, expressed in angular terms at 37 km (20 NM) from the runway threshold on the minimum glide path, shall be 0.2 degree. The CMN limit shall be 0.1 degree at 37 km (20 NM) from the approach reference datum along the extended runway centre line at the minimum glide path angle.

b) *With azimuth angle.* The PFE limit and PFN limit, expressed in angular terms at plus or minus 40 degrees azimuth angle, shall be 1.3 times the value on the extended runway centre line at the same distance from the approach reference datum. The CMN limit, expressed in angular terms at plus or minus 40 degrees azimuth angle, shall be 1.3 times the value on the extended runway centre line at the same distance from the approach reference datum.

c) *With elevation angle.* For elevation angles above the minimum glide path or 3 degrees, whichever is less and up to the maximum of the proportional guidance coverage and at the locus of points directly above the approach reference datum the PFE limit, PFN limit and the CMN limit expressed in angular terms shall be allowed to degrade linearly such that at an elevation angle of 15 degrees the limits are 2 times the value specified at the reference datum. In no case shall the CMN directly above the reference datum exceed plus or minus 0.07 degree. For other regions of coverage within the angular sector from an elevation angle equivalent to the minimum glide path up to the maximum angle of proportional coverage, the degradations with distance and azimuth angle specified in a) and b) shall apply.

d) The PFE, PFN and CMN limits shall not degrade with elevation angle in the region between the minimum glide path and 60 per cent of the minimum glide path. For elevation angles below 60 per cent of the minimum glide path and down to the limit of coverage specified in 3.11.5.3.2.1.2, and at the locus of points directly below the approach reference datum the PFE limit, the PFN limit and the CMN limit expressed in angular terms, shall be allowed to increase linearly to 6 times the value at the approach reference datum. For other regions of coverage within the angular sector from an elevation angle equivalent to 60 per cent of the minimum glide path angle value, and down to the limit of coverage, the degradation with distance and azimuth angle specified in a) and b) shall apply. In no case shall the PFE be allowed to exceed 0.8 degree, or the CMN be allowed to exceed 0.4 degree.

e) *Maximum CMN.* For elevation angles above 60 per cent of the minimum glide path, the CMN limits shall not exceed 0.2 degree in any region of coverage.

3.11.4.9.6.2 *Maximum angular PFE and PFN.* Except as allowed for simplified MLS configurations in 3.11.3.4, in any region within coverage, the angular error limits for elevation angles above 60 per cent of the minimum glide path shall be as follows:

a) the PFE shall not exceed plus or minus 0.25 degree; and

b) the PFN shall not exceed plus or minus 0.15 degree.

3.11.4.9.6.3 **Recommendation.—** *The limit expressed in angular terms on the linear degradation of the PFE limit, the PFN limit and the CMN limit at angles below 60 per cent of the minimum glide path and down to the limit of coverage should be 3 times the value permitted at the approach reference datum.*

Note.— For other regions of coverage within the angular sector from an elevation angle equivalent to 60 per cent of the minimum glide path and down to the limit of coverage, the degradation with distance and azimuth angle specified in 3.11.4.9.6.1 a) and b) applies.

3.11.4.9.6.4 **Recommendation.—** Maximum CMN. *For elevation angles above 60 per cent of the minimum glide path, the CMN limits should not exceed 0.1 degree in any region of coverage.*

3.11.4.9.6.5 **Recommendation.—** *The PFE should not exceed 0.35 degree, and the CMN should not exceed 0.2 degree.*

3.11.4.9.6.6 Approach elevation equipment sited to provide a minimum glide path higher than 3 degrees shall provide angular accuracies not less than those specified for equipment sited for a 3-degree minimum glide path within the coverage volume.

3.11.4.10 *Power density*

3.11.4.10.1 The power density for DPSK, clearance and angle guidance signals shall be at least the values shown in the following table under all operational weather conditions at any point within coverage except as specified in 3.11.4.10.2.

Function	*DPSK signals (dBW/m²)*	*Angle signals (dBW/m²) (antenna beamwidth)* 1°	2°	3°	*Clearance signals (dBW/m²)*
Approach azimuth guidance	–89.5	–85.7	–79.7	–76.2	–88.0
High rate approach azimuth guidance	–89.5	–88.0	–84.5	–81.0	–88.0
Back azimuth guidance	–89.5	–88.0	–82.7	–79.2	–88.0
Approach elevation guidance	–89.5	–88.0	–84.5	N/A	N/A

N/A = not applicable

Note.— The table above specifies the minimum power densities for clearance signals and scanning beam signals. The relative values of the two signals are specified in 3.11.4.6.2.5.2.

3.11.4.10.2 The power density of the approach azimuth angle guidance signals shall be greater than that specified in 3.11.4.10.1 by at least:

a) 15 dB at the approach reference datum;

b) 5 dB for one degree or 9 dB for 2 degree or larger beamwidth antennas at 2.5 m (8 ft) above the runway surface, at the MLS datum point, or at the farthest point of the runway centre line which is in line of sight of the azimuth antenna.

Note 1.— Near the runway surface the approach azimuth equipment will normally provide power densities higher than those specified for angle signals in 3.11.4.10.1 to support auto-land operations. Attachment G provides guidance as regards antenna beamwidth and power budget considerations.

Note 2.— The specifications for coverage in 3.11.5.2.2 and 3.11.5.3.2 make provision for difficult ground equipment siting conditions in which it may not be feasible to provide the power density specified in 3.11.4.10.2.

3.11.4.10.3 *Multipath relative power densities*

3.11.4.10.3.1 Within the MLS azimuth coverage at 60 m (200 ft) or more above threshold, the duration of a reflected scanning beam signal whose power density is higher than four decibels below the approach azimuth guidance, or high rate azimuth guidance scanning beam signal power density, shall be shorter than one second, as seen by an aircraft on a published approach.

3.11.4.10.3.2 Within the MLS azimuth proportional guidance sector, below 60 m (200 ft) above threshold, the power density of any reflected approach azimuth guidance or high rate approach azimuth guidance scanning beam signal shall be less than ten decibels above the power density of the approach azimuth guidance or high rate approach azimuth guidance scanning beam signal. On the runway centre line, this reflected signal shall not degrade the azimuth scanning beam shape and generate at the output of a receiver an error beyond the tolerances as stated in 3.11.4.9.

3.11.4.10.3.3 Within the MLS elevation coverage, the duration of a reflected approach elevation guidance scanning beam signal whose power density is higher than four decibels below the approach elevation guidance scanning beam signal power density shall be shorter than one second, as seen by an aircraft on a published approach.

3.11.5 Ground equipment characteristics

3.11.5.1 *Synchronization and monitoring.* The synchronization of the time-division-multiplexed angle guidance and data transmissions which are listed in 3.11.4.3.3 shall be monitored.

Note.— Specific monitoring requirements for various MLS functions are specified in 3.11.5.2.3 and 3.11.5.3.3.

3.11.5.1.1 *Residual radiation of MLS functions.* The residual radiation of an MLS function at times when another function is radiating shall be at least 70 dB below the level provided when transmitting.

Note.— The acceptable level of residual radiation for a particular function is that level which has no adverse effect on the reception of any other function and is dependent upon equipment siting and aircraft position.

3.11.5.2 *Azimuth guidance equipment*

3.11.5.2.1 *Scanning beam characteristics.* Azimuth ground equipment antennas shall produce a fan-shaped beam which is narrow in the horizontal plane, broad in the vertical plane and which is scanned horizontally between the limits of the proportional guidance sector.

3.11.5.2.1.1 *Coordinate system.* Azimuth guidance information shall be radiated in either conical or planar coordinates.

3.11.5.2.1.2 *Antenna beamwidth.* The antenna beamwidth shall not exceed 4 degrees.

Note.— It is intended that the detected scanning beam envelope, throughout the coverage should not exceed 250 microseconds (equivalent to a beamwidth of 5 degrees) in order to ensure proper angle decoding by the airborne equipment.

3.11.5.2.1.3 *Scanning beam shape.* The minus 10-dB points on the beam envelope shall be displaced from the beam centre by at least 0.76 beamwidth, but not more than 0.96 beamwidth.

Note.— The beam shape described applies on boresight in a multipath free environment using a suitable filter. Information on beam shape and side lobes is provided in Attachment G, 3.1 and 3.2.

3.11.5.2.2 *Coverage*

Note.— Diagrams illustrating the coverage requirements specified herein are contained in Attachment G, Figures G-5A, G5-B and G-6.

3.11.5.2.2.1 *Approach azimuth.* Except as allowed for simplified MLS configurations in 3.11.3.4, the approach azimuth ground equipment shall provide guidance information in at least the following volumes of space:

3.11.5.2.2.1.1 *Approach region.*

a) Laterally, within a sector of 80 degrees (normally plus and minus 40 degrees about the antenna boresight) which originates at the approach azimuth antenna phase centre.

b) Longitudinally, from the approach azimuth antenna to 41.7 km (22.5 NM).

c) Vertically, between:

1) a lower conical surface originating at the approach azimuth antenna phase centre and inclined upward to reach, at the longitudinal coverage limit, a height of 600 m (2 000 ft) above the horizontal plane which contains the antenna phase centre; and

2) an upper conical surface originating at the approach azimuth antenna phase centre inclined at 15 degrees above the horizontal to a height of 6 000 m (20 000 ft).

Note 1.— Where intervening obstacles penetrate the lower surface, it is intended that guidance need not be provided at less than line-of-sight heights.

Note 2.— Where it is determined that misleading guidance information exists outside the promulgated coverage sector and appropriate operational procedures cannot provide an acceptable solution, techniques to minimize the effects are available. These techniques include adjustment of the proportional guidance sector or use of out-of-coverage indication signals. Guidance material on the use of these techniques is contained in Attachment G, 8.

Note 3.— Where the proportional guidance sector provided is less than the minimum lateral coverage specified in 3.11.5.2.2.1.1 a), clearance guidance signals specified in 3.11.4.6.2.5 are required.

3.11.5.2.2.1.2 *Runway region.*

a) Horizontally within a sector 45 m (150 ft) each side of the runway centre line beginning at the stop end and extending parallel with the runway centre line in the direction of the approach to join the minimum operational coverage region as described in 3.11.5.2.2.1.3.

b) Vertically between:

1) a horizontal surface which is 2.5 m (8 ft) above the farthest point of the runway centre line which is in line of sight of the azimuth antenna; and

2) a conical surface originating at the azimuth ground equipment antenna inclined at 20 degrees above the horizontal up to a height of 600 m (2 000 ft).

Note 1.— Information on the determination of the point referred to in b) 1) is given in Attachment G, 2.3.6.

Note 2.— It is intended that guidance below the line of sight may be allowed as long as the signal quality can satisfy the accuracy requirements in 3.11.4.9.4.

3.11.5.2.2.1.2.1 **Recommendation.—** *The lower level of the coverage in the runway region should be 2.5 m (8 ft) above the runway centre line.*

3.11.5.2.2.1.2.2 Where required to support automatic landing, roll-out or take-off, the lower level of coverage in the runway region shall not exceed 2.5 m (8 ft) above the runway centre line.

Note.— The lower coverage limit of 2.5 m (8 ft) is intended to serve all runways. Information on the possibility of relaxing the power density requirements in 3.11.4.10.2 at 2.5 m (8 ft) is provided at Attachment G, 2.3.6.

3.11.5.2.2.1.3 *Minimum operational coverage region.*

a) Laterally, within a sector of plus and minus 10 degrees about the runway centre line which originates at the MLS datum point.

b) Longitudinally, from the runway threshold in the direction of the approach to the longitudinal coverage limit specified in 3.11.5.2.2.1.1 b).

c) Vertically, between:

1) a lower plane which contains the line 2.5 m (8 ft) above the runway threshold and is inclined upward to reach the height of the surface specified in 3.11.5.2.2.1.1 c) 1) at the longitudinal coverage limit; and

2) the upper surface specified in 3.11.5.2.2.1.1 c) 2).

3.11.5.2.2.1.4 **Recommendation.—** *The approach azimuth ground equipment should provide guidance vertically to 30 degrees above the horizontal.*

3.11.5.2.2.1.5 The minimum proportional guidance sector shall be as follows:

Approach azimuth antenna to threshold distance (AAT)	Minimum proportional coverage
AAT < 500 m (1 640 ft)	±8°
500 m (1 640 ft) < AAT < 3 100 m (10 170 ft)	±6°
3 100 m (10 170 ft) < AAT	±4°

3.11.5.2.2.2 *Back azimuth.* The back azimuth ground equipment shall provide information in at least the following volume of space:

a) Horizontally, within a sector plus or minus 20 degrees about the runway centre line originating at the back azimuth ground equipment antenna and extending in the direction of the missed approach at least 18.5 km (10 NM) from the runway stop end.

b) Vertically, in the runway region between:

1) a horizontal surface 2.5 m (8 ft) above the farthest point of runway centre line that is in line-of-sight of the back azimuth antenna; and

2) a conical surface originating at the back azimuth ground equipment antenna inclined at 20 degrees above the horizontal up to a height of 600 m (2 000 ft).

c) Vertically, in the back azimuth region between:

1) a conical surface originating 2.5 m (8 ft) above the runway stop end, inclined at 0.9 degree above the horizontal; and

2) a conical surface originating at the back azimuth ground equipment antenna, inclined at 15 degrees above the horizontal up to a height of 3 000 m (10 000 ft).

Note 1.— Information on the determination of the point referred to in b) 1) is given in Attachment G, 2.3.6.

Note 2.— When physical characteristics of the runway or obstacles prevent the achievement of the Standards in b) and c), it is intended that guidance need not be provided at less than line-of-sight heights.

3.11.5.2.2.2.1 **Recommendation.—** *The back azimuth facility should provide guidance information to 30 degrees above the horizontal.*

3.11.5.2.2.2.2 The minimum proportional guidance sector shall be plus or minus 10 degrees about the runway centre line.

Note.— Application information is provided in Attachment G, 7.5.

3.11.5.2.3 *Monitor and control*

3.11.5.2.3.1 Except as allowed for simplified MLS configurations in 3.11.3.4, the approach azimuth and back azimuth monitor systems shall cause the radiation of their respective functions to cease and a warning shall be provided at the designated control points if any of the following conditions persist for longer than the periods specified:

a) there is a change in the ground equipment contribution to the mean course error such that the PFE at the approach reference datum or in the direction of any azimuth radial exceeds the limits specified in 3.11.4.9.4 and 3.11.4.9.5 for a period of more than one second;

b) there is a reduction in the radiated power to less than that necessary to satisfy the requirements specified in 3.11.4.10.1 and 3.11.4.6.2.5.2 for a period of more than one second;

c) there is an error in the preamble DPSK transmissions which occurs more than once in any one-second period;

d) there is an error in the TDM synchronization of a particular azimuth function such that the requirement specified in 3.11.4.3.2 is not satisfied, and this condition persists for more than one second.

Note.— Guidance material is provided in Attachment G, 6.

3.11.5.2.3.2 Design and operation of the monitor system shall cause radiation to cease and a warning shall be provided at the designated control points in the event of failure of the monitor system itself.

3.11.5.2.3.3 The period during which erroneous guidance information is radiated, including period(s) of zero radiation, shall not exceed the periods specified in 3.11.5.2.3.1. Any attempts to clear a fault by resetting the primary ground equipment or by switching to standby ground equipment shall be completed within this time, and any period(s) of zero radiation shall not exceed 500 milliseconds. If the fault is not cleared within the time allowed, the radiation shall cease. After shutdown, no attempt shall be made to restore service until a period of 20 seconds has elapsed.

3.11.5.2.4 *Integrity and continuity of service requirements for MLS azimuth*

3.11.5.2.4.1 The probability of not radiating false guidance signals shall not be less than $1 - 0.5 \times 10^{-9}$ in any one landing for an MLS azimuth intended to be used for Categories II and III operations.

3.11.5.2.4.2 **Recommendation.—** *The probability of not radiating false guidance signals should not be less than $1 - 1.0 \times 10^{-7}$ in any one landing for an MLS azimuth intended to be used for Category I operations.*

3.11.5.2.4.3 The probability of not losing the radiated guidance signal shall be greater than:

a) $1 - 2 \times 10^{-6}$ in any period of 15 seconds for an MLS azimuth intended to be used for Category II or Category IIIA operations (equivalent to 2 000 hours mean time between outages); and

b) $1 - 2 \times 10^{-6}$ in any period of 30 seconds for an MLS azimuth intended to be used for the full range of Category III operations (equivalent to 4 000 hours mean time between outages).

3.11.5.2.4.4 **Recommendation.—** *The probability of not losing the radiated guidance signal should exceed $1 - 4 \times 10^{-6}$ in any period of 15 seconds for an MLS azimuth intended to be used for Category I operations (equivalent to 1 000 hours mean time between outages).*

Note.— Guidance material on integrity and continuity of service is given in Attachment G, 11.

3.11.5.2.5 *Ground equipment accuracy*

3.11.5.2.5.1 Except as allowed for simplified MLS configurations in 3.11.3.4, the ground equipment contribution to the mean course error shall not exceed an error equivalent to plus or minus 3 m (10 ft) at the MLS approach reference datum.

3.11.5.2.5.2 **Recommendation.—** *The ground equipment contribution to the CMN at the reference datum should not exceed 1 m (3.3 ft) or 0.03 degree, whichever is less, on a 95 per cent probability basis.*

Note 1.— This is the equipment error, and does not include any propagation effects.

Note 2.— Guidance on the measurement of this parameter can be found in Attachment G, 2.5.2.

3.11.5.2.6 *Siting*

Note 1.— It is not intended to restrict the installation of MLS when it is not possible to site the azimuth ground equipment on the extension of the runway centre line.

Note 2.— Guidance material on critical and sensitive areas for azimuth antennas is provided in Attachment G, 4.3.

3.11.5.2.6.1 Normally, the approach azimuth ground equipment antenna shall be located on the extension of the runway centre line beyond the stop end and shall be adjusted so that the vertical plane containing the zero degree course line will contain the MLS approach reference datum. Siting of the antenna shall be consistent with safe obstacle clearance SARPs in Annex 14.

3.11.5.2.6.2 The back azimuth ground equipment antenna shall normally be located on the extension of the runway centre line at the threshold end, and the antenna shall be adjusted so that the vertical plane containing the zero degree course line will contain the back azimuth reference datum.

3.11.5.3 *Elevation guidance equipment*

3.11.5.3.1 *Scanning beam characteristics.* The elevation ground equipment antenna shall produce a fan-shaped beam that is narrow in the vertical plane, broad in the horizontal plane and which is scanned vertically between the limits of the proportional guidance sector.

3.11.5.3.1.1 *Coordinate system.* Approach elevation guidance information shall be radiated in conical coordinates.

3.11.5.3.1.2 *Antenna beamwidth.* The antenna beamwidth shall not exceed 2.5 degrees.

3.11.5.3.1.3 *Scanning beam shape.* The minus 10-dB points on the beam envelope shall be displayed from the centre line by at least 0.76 beamwidth but not more than 0.96 beamwidth.

Note.— The beam shape described applies on boresight in a multipath-free environment using a suitable filter. Information on beam shape and side lobes is provided in Attachment G, 3.1 and 3.2.

3.11.5.3.2 *Coverage*

Note.— Diagrams illustrating the coverage requirements specified herein are contained in Attachment G, Figure G-10A.

3.11.5.3.2.1 *Approach elevation.* Except as allowed for simplified MLS configurations in 3.11.3.4, the approach elevation ground equipment shall provide proportional guidance information in at least the following volume of space:

3.11.5.3.2.1.1 *Approach region.*

a) Laterally, within a sector originating at the elevation antenna phase centre which has an angular extent at least equal to the proportional guidance sector provided by the approach azimuth ground equipment at the longitudinal coverage limit.

b) Longitudinally, from the elevation antenna in the direction of the approach to 37 km (20 NM) from threshold.

c) Vertically, between:

1) a lower conical surface originating at the elevation antenna phase centre and inclined upward to reach, at the longitudinal coverage limit, a height of 600 m (2 000 ft) above the horizontal plane which contains the antenna phase centre; and

2) an upper conical surface originating at the elevation antenna phase centre and inclined 7.5 degrees above the horizontal up to a height of 6 000 m (20 000 ft).

Note.— When the physical characteristics of the approach region prevent the achievement of the Standards under a), b) and c) 1), it is intended that guidance need not be provided below the line of sight.

3.11.5.3.2.1.1.1 **Recommendation.—** *The approach elevation ground equipment should provide proportional guidance to angles greater than 7.5 degrees above the horizontal when necessary to meet operational requirements.*

3.11.5.3.2.1.2 *Minimum operational coverage region.*

a) Laterally, within a sector originating at the MLS datum point, of plus and minus 10 degrees about the runway centre line;

b) Longitudinally, 75 m (250 ft) from the MLS datum point in the direction of threshold, to the far coverage limit specified in 3.11.5.3.2.1.1 b);

c) Vertically, between the upper surface specified in 3.11.5.3.2.1.1 c) 2), and the higher of:

1) a surface which is the locus of points 2.5 m (8 ft) above the runway; or

2) a plane originating at the MLS datum point and inclined upward to reach, at the longitudinal coverage limit, the height of the surface specified in 3.11.5.3.2.1.1 c) 1).

Note.— Information related to the horizontal radiation pattern of the approach elevation is provided in Attachment G, 3.3.

3.11.5.3.3 *Monitor and control*

3.11.5.3.3.1 Except as allowed for simplified MLS configurations in 3.11.3.4, the approach elevation monitor system shall cause the radiation of its respective functions to cease and a warning shall be provided at the designated control point if any of the following conditions persist for longer than the periods specified:

a) there is a change in the ground equipment contribution to the mean glide path error component such that the PFE at the approach reference datum or on any glide path consistent with published approach procedures exceeds the limits specified in 3.11.4.9.6 for a period of more than one second;

b) there is a reduction in the radiated power to less than that necessary to satisfy the requirements specified in 3.11.4.10.1 for a period of more than one second;

c) there is an error in the preamble DPSK transmissions which occurs more than once in any one-second period;

d) there is an error in the TDM synchronization of a particular elevation function such that the requirement specified in 3.11.4.3.2 is not satisfied and this condition persists for more than one second.

Note.— Guidance material is provided in Attachment G, 6.

3.11.5.3.3.2 Design and operation of the monitor system shall cause radiation to cease and a warning shall be provided at the designated control points in the event of failure of the monitor system itself.

3.11.5.3.3.3 The period during which erroneous guidance information is radiated, including period(s) of zero radiation, shall not exceed the periods specified in 3.11.5.3.3.1. Any attempts to clear a fault by resetting the primary ground equipment or by switching to standby ground equipment shall be completed within this time, and any period(s) of zero radiation shall not exceed 500 milliseconds. If the fault is not cleared within the time allowed, radiation shall cease. After shutdown, no attempt shall be made to restore service until a period of 20 seconds has elapsed.

3.11.5.3.4 *Integrity and continuity of service requirements for MLS approach elevation*

3.11.5.3.4.1 The probability of not radiating false guidance signals shall not be less than $1 - 0.5 \times 10^{-9}$ in any one landing for an MLS approach elevation intended to be used for Categories II and III operations.

3.11.5.3.4.2 **Recommendation.—** *The probability of not radiating false guidance signals should not be less than* $1 - 1.0 \times 10^{-7}$ *in any one landing on MLS approach elevation intended to be used for Category I operations.*

3.11.5.3.4.3 The probability of not losing the radiated guidance signal shall be greater than $1 - 2 \times 10^{-6}$ in any period of 15 seconds for an MLS approach elevation intended to be used for Categories II and III operations (equivalent to 2 000 hours mean time between outages).

3.11.5.3.4.4 **Recommendation.—** *The probability of not losing the radiated guidance signal should exceed* $1 - 4 \times 10^{-6}$ *in any period of 15 seconds for an MLS approach elevation intended to be used for Category I operations (equivalent to 1 000 hours mean time between outages).*

Note.— Guidance material on integrity and continuity of service is given in Attachment G, 11.

3.11.5.3.5 *Ground equipment accuracy*

3.11.5.3.5.1 Except as allowed for simplified MLS configurations in 3.11.3.4, the ground equipment contribution to the mean glide path error component of the PFE shall not exceed an error equivalent to plus or minus 0.3 m (1 ft) at the approach reference datum.

3.11.5.3.5.2 **Recommendation.—** *The ground equipment contribution to the CMN at the reference datum should not exceed 0.15 m (0.5 ft) on a 95 per cent probability basis.*

Note 1.— This is the equipment error, and does not include any propagation effects.

Note 2.— Guidance on the measurement of this parameter can be found in Attachment G, 2.5.2.

3.11.5.3.6 *Siting*

Note.— Guidance material on critical areas for elevation antennas is provided in Attachment G, 4.2.

3.11.5.3.6.1 The approach elevation ground equipment antenna shall be located beside the runway. Siting of the antennas shall be consistent with obstacle clearance Standards and Recommended Practices in Annex 14.

3.11.5.3.6.2 The approach elevation ground equipment antenna shall be sited so that the asymptote of the minimum glide path crosses the threshold at the MLS approach reference datum.

3.11.5.3.6.2.1 **Recommendation.—** *The minimum glide path angle is normally 3 degrees and should not exceed 3 degrees except where alternative means of satisfying obstacle clearance requirements are impractical.*

Note.— It is intended that the choice of a minimum glide path angle higher than 3 degrees be determined by operational rather than technical factors.

3.11.5.3.6.2.2 **Recommendation.—** *The approach elevation ground equipment antenna should be sited so that the height of the point which corresponds to the decoded guidance signal of the minimum glide path above the threshold does not exceed 18 m (60 ft).*

Note.— The offset of the elevation antenna from the runway centre line will cause the minimum glide path elevation guidance to be above the approach reference datum.

3.11.5.3.6.3 **Recommendation.—** *When ILS and MLS simultaneously serve the same runway, the ILS reference datum and the MLS approach reference datum should coincide within a tolerance of 1 m (3 ft).*

Note 1.— It is intended that this recommendation would apply only if the ILS reference datum satisfies the height specifications in 3.1.5.1.4 and 3.1.5.1.5.

Note 2.— Information related to collocated MLS/ILS siting is provided in Attachment G, 4.1.

3.11.5.4 *Data coverage and monitoring*

Note 1.— Guidance material relating to data applications is provided in Attachment G, 2.7.

Note 2.— The essential data are basic data and essential auxiliary data transmitted in auxiliary data words A1, A2, A3 and A4.

3.11.5.4.1 *Basic data*

3.11.5.4.1.1 The basic data words 1, 2, 3, 4 and 6 shall be transmitted throughout the approach azimuth coverage sector.

Note.— The composition of the basic data words is given in Appendix A, Table A-7.

3.11.5.4.1.2 Where the back azimuth function is provided, basic data words 4, 5 and 6 shall be transmitted throughout the approach azimuth and back azimuth coverage sectors.

3.11.5.4.2 *Auxiliary data*

3.11.5.4.2.1 Auxiliary data words A1, A2 and A3 shall be transmitted throughout the approach azimuth coverage sector.

3.11.5.4.2.2 Where the back azimuth function is provided, auxiliary data words A3 and A4 shall be transmitted throughout the approach azimuth and back azimuth coverage sectors.

Note.— Auxiliary data words B42 and B43 are transmitted in place of A1 and A4, respectively, to support applications which require azimuth antenna rotation beyond the alignment range available in A1 and A4.

3.11.5.4.2.3 When provided, auxiliary data B words shall be transmitted throughout the approach azimuth sector, except that the words comprising the back azimuth procedure database shall be transmitted throughout the back azimuth sector.

3.11.5.4.2.4 **Recommendation.—** *If the back azimuth function is provided, the appropriate auxiliary data B words should be transmitted.*

Note.— The composition of the auxiliary data words is given in Appendix A, Tables A-10, A-12 and A-15.

3.11.5.4.3 *Monitor and control*

3.11.5.4.3.1 The monitor system shall provide a warning to the designated control point if the radiated power is less than that necessary to satisfy the DPSK requirement specified in 3.11.4.10.1.

3.11.5.4.3.2 If a detected error in the basic data radiated into the approach azimuth coverage occurs in at least two consecutive samples, radiation of these data, approach azimuth and elevation functions shall cease.

3.11.5.4.3.3 If a detected error in the basic data radiated into the back azimuth coverage occurs in at least two consecutive samples, radiation of these data and the back azimuth function shall cease.

3.11.5.5 *Distance measuring equipment*

3.11.5.5.1 DME information shall be provided at least throughout the coverage volume in which approach and back azimuth guidance is available.

3.11.5.5.2 **Recommendation.—** *DME information should be provided throughout 360° azimuth if operationally required.*

Note.— Siting of DME ground equipment is dependent on runway length, runway profile and local terrain. Guidance on siting of DME ground equipment is given in Attachment C, 7.1.6 and Attachment G, 5.

3.11.6 Airborne equipment characteristics

3.11.6.1 *Angle and data functions*

3.11.6.1.1 *Accuracy*

3.11.6.1.1.1 Where the DPSK and scanning beam signal power densities are the minimum specified in 3.11.4.10.1, the airborne equipment shall be able to acquire the signal and any decoded angle signal shall have a CMN not exceeding 0.1 degree, except that the back azimuth guidance function CMN shall not exceed 0.2 degree.

Note 1.— It is intended that basic and auxiliary data words which contain information essential for the desired operation be decoded within a time period and with an integrity which is suitable for the intended application.

Note 2.— Information related to the acquisition and validation of angle guidance and data functions is given in Attachment G, 7.3.

3.11.6.1.1.2 Where the radiated signal power density is high enough to cause the airborne receiver noise contribution to be insignificant, the airborne equipment shall not degrade the accuracy of any decoded angle guidance signal by greater than plus or minus 0.017 degree (PFE), and plus or minus 0.015 degree (azimuth), and plus or minus 0.01 degree (elevation) CMN.

3.11.6.1.1.3 In order to obtain accurate guidance to 2.5 m (8 ft) above the runway surface, the airborne equipment shall produce less than 0.04 degree CMN with the power densities indicated in 3.11.4.10.2 b).

3.11.6.1.2 *Dynamic range*

3.11.6.1.2.1 The airborne equipment shall be able to acquire the signal and the performance in 3.11.6.1.1.2 shall be met where the power density of any of the radiated signals has any value between the minimum specified in 3.11.4.10.1 up to a maximum of minus 14.5 dBW/m^2.

3.11.6.1.2.2 The receiver performance shall not degrade beyond the specified limits when the maximum differential levels permitted in 3.11.6.1.2.1 exist between signal power densities of individual functions.

3.11.6.1.3 *Receiver angle data output filter characteristics*

3.11.6.1.3.1 For sinusoidal input frequencies, receiver output filters shall not induce amplitude variations or phase lags in the angle data which exceed those obtained with a single pole low-pass filter with a corner frequency of 10 rad/s by more than 20 per cent.

Note.— Receiver outputs intended only to operate visual displays may benefit from appropriate additional filtering. Additional information on output data filtering is given in Attachment G, 7.4.2.

3.11.6.1.4 *Adjacent channel spurious response.* The receiver performance specified in 3.11.6 shall be met when the ratio between the desired tracked signals and the noise produced by the adjacent channel signals in a 150 kHz bandwidth centred around the desired frequency is equal to or greater than the signal-to-noise ratio (SNR) values:

a) as specified in Table X1 when the power density received from the desired ground station is equal to or higher than the values as specified in Table Y, or

b) as specified in the Table X2 when the power density received from the desired ground station is between the minimum density power values specified in 3.11.4.10.1 and the values specified in Table Y.

Table Y

Function	*Beam width (Note 2)* 1°	2°	3°
Approach azimuth guidance	–69.8 dBW/m^2	–63.8 dBW/m^2	–60.2 dBW/m^2
High rate approach azimuth guidance	–74.6 dBW/m^2	–69.5 dBW/m^2	–65 dBW/m^2
Approach elevation guidance	–71 dBW/m^2	–65 dBW/m^2	N/A
Back azimuth	N/A (Note 4)	N/A (Note 4)	N/A (Note 4)

Table X1

Function	*Data*	*SNR (Note 1)* *Beam width (Note 2)* 1°	2°	3°
Approach azimuth guidance	5 dB	24.7 dB	30.7 dB	34.3 dB
High rate approach azimuth guidance	5 dB	19.9 dB	26 dB	29.5 dB
Approach elevation guidance	5 dB	23.5 dB	29.5 dB	N/A
Back azimuth (Note 4)	5 dB	5.2 dB	11.2 dB	14.8 dB

Table X2

Function	*Data*	*SNR (Note 1)* *Beam width (Note 2)* 1°	2°	3°
Approach azimuth guidance	5 dB	8.2 dB	14.3 dB	17.8 dB
High rate approach azimuth guidance	5 dB	3.5 dB	9.5 dB	13 dB
Approach elevation guidance	5 dB	3.5 dB	9.5 dB	N/A
Back azimuth (Note 4)	5 dB	5.2 dB	11.2 dB	14.8 dB

Note 1.— When the radiated desired signal power density is high enough to cause the airborne receiver noise contribution to be insignificant, the airborne CMN contribution for elevation and approach azimuth guidance (not for back azimuth) is required as stated in 3.11.6.1.1, to be reduced compared to the CMN contribution when the radiated desired signal power density is at the minimum specified in 3.11.4.10.1 and the minimum SNR values are therefore higher.

Note 2.— The relationship is linear between adjacent points designated by the beam widths.

Note 3.— These SNR values are to be protected through application of frequency separation criteria as explained in Attachment G, 9.3.

Note 4.— As there is no change in back azimuth guidance accuracy when the airborne receiver noise may be considered as insignificant, the same SNR values are applied for back azimuth.

Table A. DME/MLS angle, DME/VOR and DME/ILS/MLS channelling and pairing

Channel pairing				DME parameters					
				Interrogation				Reply	
					Pulse codes				
						DME/P mode			
DME channel number	VHF frequency MHz	MLS angle frequency MHz	MLS channel number	Frequency MHz	DME/N µs	Initial approach µs	Final approach µs	Frequency MHz	Pulse codes µs
*1X	–	–	–	1 025	12	–	–	962	12
**1Y	–	–	–	1 025	36	–	–	1 088	30
*2X	–	–	–	1 026	12	–	–	963	12
**2Y	–	–	–	1 026	36	–	–	1 089	30
*3X	–	–	–	1 027	12	–	–	964	12
**3Y	–	–	–	1 027	36	–	–	1 090	30
*4X	–	–	–	1 028	12	–	–	965	12
**4Y	–	–	–	1 028	36	–	–	1 091	30
*5X	–	–	–	1 029	12	–	–	966	12
**5Y	–	–	–	1 029	36	–	–	1 092	30
*6X	–	–	–	1 030	12	–	–	967	12
**6Y	–	–	–	1 030	36	–	–	1 093	30
*7X	–	–	–	1 031	12	–	–	968	12
**7Y	–	–	–	1 031	36	–	–	1 094	30
*8X	–	–	–	1 032	12	–	–	969	12
**8Y	–	–	–	1 032	36	–	–	1 095	30
*9X	–	–	–	1 033	12	–	–	970	12
**9Y	–	–	–	1 033	36	–	–	1 096	30
*10X	–	–	–	1 034	12	–	–	971	12
**10Y	–	–	–	1 034	36	–	–	1 097	30
*11X	–	–	–	1 035	12	–	–	972	12
**11Y	–	–	–	1 035	36	–	–	1 098	30
*12X	–	–	–	1 036	12	–	–	973	12
**12Y	–	–	–	1 036	36	–	–	1 099	30
*13X	–	–	–	1 037	12	–	–	974	12
**13Y	–	–	–	1 037	36	–	–	1 100	30
*14X	–	–	–	1 038	12	–	–	975	12
**14Y	–	–	–	1 038	36	–	–	1 101	30
*15X	–	–	–	1 039	12	–	–	976	12
**15Y	–	–	–	1 039	36	–	–	1 102	30
*16X	–	–	–	1 040	12	–	–	977	12
**16Y	–	–	–	1 040	36	–	–	1 103	30

Channel pairing				DME parameters					
				Interrogation				Reply	
					Pulse codes				
						DME/P mode			
DME channel number	VHF frequency MHz	MLS angle frequency MHz	MLS channel number	Frequency MHz	DME/N µs	Initial approach µs	Final approach µs	Frequency MHz	Pulse codes µs
∇17X	108.00	–	–	1 041	12	–	–	978	12
17Y	108.05	5 043.0	540	1 041	36	36	42	1 104	30
17Z	–	5 043.3	541	1 041	–	21	27	1 104	15
18X	108.10	5 031.0	500	1 042	12	12	18	979	12
18W	–	5 031.3	501	1 042	–	24	30	979	24
18Y	108.15	5 043.6	542	1 042	36	36	42	1 105	30
18Z	–	5 043.9	543	1 042	–	21	27	1 105	15
19X	108.20	–	–	1 043	12	–	–	980	12
19Y	108.25	5 044.2	544	1 043	36	36	42	1 106	30
19Z	–	5 044.5	545	1 043	–	21	27	1 106	15
20X	108.30	5 031.6	502	1 044	12	12	18	981	12
20W	–	5 031.9	503	1 044	–	24	30	981	24
20Y	108.35	5 044.8	546	1 044	36	36	42	1 107	30
20Z	–	5 045.1	547	1 044	–	21	27	1 107	15
21X	108.40	–	–	1 045	12	–	–	982	12
21Y	108.45	5 045.4	548	1 045	36	36	42	1 108	30
21Z	–	5 045.7	549	1 045	–	21	27	1 108	15
22X	108.50	5 032.2	504	1 046	12	12	18	983	12
22W	–	5 032.5	505	1 046	–	24	30	983	24
22Y	108.55	5 046.0	550	1 046	36	36	42	1 109	30
22Z	–	5 046.3	551	1 046	–	21	27	1 109	15
23X	108.60	–	–	1 047	12	–	–	984	12
23Y	108.65	5 046.6	552	1 047	36	36	42	1 110	30
23Z	–	5 046.9	553	1 047	–	21	27	1 110	15
24X	108.70	5 032.8	506	1 048	12	12	18	985	12
24W	–	5 033.1	507	1 048	–	24	30	985	24
24Y	108.75	5 047.2	554	1 048	36	36	42	1 111	30
24Z	–	5 047.5	555	1 048	–	21	27	1 111	15
25X	108.80	–	–	1 049	12	–	–	986	12
25Y	108.85	5 047.8	556	1 049	36	36	42	1 112	30
25Z	–	5 048.1	557	1 049	–	21	27	1 112	15
26X	108.90	5 033.4	508	1 050	12	12	18	987	12
26W	–	5 033.7	509	1 050	–	24	30	987	24
26Y	108.95	5 048.4	558	1 050	36	36	42	1 113	30
26Z	–	5 048.7	559	1 050	–	21	27	1 113	15
27X	109.00	–	–	1 051	12	–	–	988	12
27Y	109.05	5 049.0	560	1 051	36	36	42	1 114	30
27Z	–	5 049.3	561	1 051	–	21	27	1 114	15

Channel pairing				DME parameters					
				Interrogation				Reply	
					Pulse codes				
						DME/P mode			
DME channel number	VHF frequency MHz	MLS angle frequency MHz	MLS channel number	Frequency MHz	DME/N µs	Initial approach µs	Final approach µs	Frequency MHz	Pulse codes µs
28X	109.10	5 034.0	510	1 052	12	12	18	989	12
28W	–	5 034.3	511	1 052	–	24	30	989	24
28Y	109.15	5 049.6	562	1 052	36	36	42	1 115	30
28Z	–	5 049.9	563	1 052	–	21	27	1 115	15
29X	109.20	–	–	1 053	12	–	–	990	12
29Y	109.25	5 050.2	564	1 053	36	36	42	1 116	30
29Z	–	5 050.5	565	1 053	–	21	27	1 116	15
30X	109.30	5 034.6	512	1 054	12	12	18	991	12
30W	–	5 034.9	513	1 054	–	24	30	991	24
30Y	109.35	5 050.8	566	1 054	36	36	42	1 117	30
30Z	–	5 051.1	567	1 054	–	21	27	1 117	15
31X	109.40	–	–	1 055	12	–	–	992	12
31Y	109.45	5 051.4	568	1 055	36	36	42	1 118	30
31Z	–	5 051.7	569	1 055	–	21	27	1 118	15
32X	109.50	5 035.2	514	1 056	12	12	18	993	12
32W	–	5 035.5	515	1 056	–	24	30	993	24
32Y	109.55	5 052.0	570	1 056	36	36	42	1 119	30
32Z	–	5 052.3	571	1 056	–	21	27	1 119	15
33X	109.60	–	–	1 057	12	–	–	994	12
33Y	109.65	5 052.6	572	1 057	36	36	42	1 120	30
33Z	–	5 052.9	573	1 057	–	21	27	1 120	15
34X	109.70	5 035.8	516	1 058	12	12	18	995	12
34W	–	5 036.1	517	1 058	–	24	30	995	24
34Y	109.75	5 053.2	574	1 058	36	36	42	1 121	30
34Z	–	5 053.5	575	1 058	–	21	27	1 121	15
35X	109.80	–	–	1 059	12	–	–	996	12
35Y	109.85	5 053.8	576	1 059	36	36	42	1 122	30
35Z	–	5 054.1	577	1 059	–	21	27	1 122	15
36X	109.90	5 036.4	518	1 060	12	12	18	997	12
36W	–	5 036.7	519	1 060	–	24	30	997	24
36Y	109.95	5 054.4	578	1 060	36	36	42	1 123	30
36Z	–	5 054.7	579	1 060	–	21	27	1 123	15
37X	110.00	–	–	1 061	12	–	–	998	12
37Y	110.05	5 055.0	580	1 061	36	36	42	1 124	30
37Z	–	5 055.3	581	1 061	–	21	27	1 124	15
38X	110.10	5 037.0	520	1 062	12	12	18	999	12
38W	–	5 037.3	521	1 062	–	24	30	999	24
38Y	110.15	5 055.6	582	1 062	36	36	42	1 125	30
38Z	–	5 055.9	583	1 062	–	21	27	1 125	15

Channel pairing				DME parameters					
				Interrogation				Reply	
					Pulse codes				
						DME/P mode			
DME channel number	VHF frequency MHz	MLS angle frequency MHz	MLS channel number	Frequency MHz	DME/N µs	Initial approach µs	Final approach µs	Frequency MHz	Pulse codes µs
39X	110.20	–	–	1 063	12	–	–	1 000	12
39Y	110.25	5 056.2	584	1 063	36	36	42	1 126	30
39Z	–	5 056.5	585	1 063	–	21	27	1 126	15
40X	110.30	5 037.6	522	1 064	12	12	18	1 001	12
40W	–	5 037.9	523	1 064	–	24	30	1 001	24
40Y	110.35	5 056.8	586	1 064	36	36	42	1 127	30
40Z	–	5 057.1	587	1 064	–	21	27	1 127	15
41X	110.40	–	–	1 065	12	–	–	1 002	12
41Y	110.45	5 057.4	588	1 065	36	36	42	1 128	30
41Z	–	5 057.7	589	1 065	–	21	27	1 128	15
42X	110.50	5 038.2	524	1 066	12	12	18	1 003	12
42W	–	5 038.5	525	1 066	–	24	30	1 003	24
42Y	110.55	5 058.0	590	1 066	36	36	42	1 129	30
42Z	–	5 058.3	591	1 066	–	21	27	1 129	15
43X	110.60	–	–	1 067	12	–	–	1 004	12
43Y	110.65	5 058.6	592	1 067	36	36	42	1 130	30
43Z	–	5 058.9	593	1 067	–	21	27	1 130	15
44X	110.70	5 038.8	526	1 068	12	12	18	1 005	12
44W	–	5 039.1	527	1 068	–	24	30	1 005	24
44Y	110.75	5 059.2	594	1 068	36	36	42	1 131	30
44Z	–	5 059.5	595	1 068	–	21	27	1 131	15
45X	110.80	–	–	1 069	12	–	–	1 006	12
45Y	110.85	5 059.8	596	1 069	36	36	42	1 132	30
45Z	–	5 060.1	597	1 069	–	21	27	1 132	15
46X	110.90	5 039.4	528	1 070	12	12	18	1 007	12
46W	–	5 039.7	529	1 070	–	24	30	1 007	24
46Y	110.95	5 060.4	598	1 070	36	36	42	1 133	30
46Z	–	5 060.7	599	1 070	–	21	27	1 133	15
47X	111.00	–	–	1 071	12	–	–	1 008	12
47Y	111.05	5 061.0	600	1 071	36	36	42	1 134	30
47Z	–	5 061.3	601	1 071	–	21	27	1 134	15
48X	111.10	5 040.0	530	1 072	12	12	18	1 009	12
48W	–	5 040.3	531	1 072	–	24	30	1 009	24
48Y	111.15	5 061.6	602	1 072	36	36	42	1 135	30
48Z	–	5 061.9	603	1 072	–	21	27	1 135	15
49X	111.20	–	–	1 073	12	–	–	1 010	12
49Y	111.25	5 062.2	604	1 073	36	36	42	1 136	30
49Z	–	5 062.5	605	1 073	–	21	27	1 136	15

Channel pairing				DME parameters					
				Interrogation				Reply	
					Pulse codes				
						DME/P mode			
DME channel number	VHF frequency MHz	MLS angle frequency MHz	MLS channel number	Frequency MHz	DME/N µs	Initial approach µs	Final approach µs	Frequency MHz	Pulse codes µs
50X	111.30	5 040.6	532	1 074	12	12	18	1 011	12
50W	–	5 040.9	533	1 074	–	24	30	1 011	24
50Y	111.35	5 062.8	606	1 074	36	36	42	1 137	30
50Z	–	5 063.1	607	1 074	–	21	27	1 137	15
51X	111.40	–	–	1 075	12	–	–	1 012	12
51Y	111.45	5 063.4	608	1 075	36	36	42	1 138	30
51Z	–	5 063.7	609	1 075	–	21	27	1 138	15
52X	111.50	5 041.2	534	1 076	12	12	18	1 013	12
52W	–	5 041.5	535	1 076	–	24	30	1 013	24
52Y	111.55	5 064.0	610	1 076	36	36	42	1 139	30
52Z	–	5 064.3	611	1 076	–	21	27	1 139	15
53X	111.60	–	–	1 077	12	–	–	1 014	12
53Y	111.65	5 064.6	612	1 077	36	36	42	1 140	30
53Z	–	5 064.9	613	1 077	–	21	27	1 140	15
54X	111.70	5 041.8	536	1 078	12	12	18	1 015	12
54W	–	5 042.1	537	1 078	–	24	30	1 015	24
54Y	111.75	5 065.2	614	1 078	36	36	42	1 141	30
54Z	–	5 065.5	615	1 078	–	21	27	1 141	15
55X	111.80	–	–	1 079	12	–	–	1 016	12
55Y	111.85	5 065.8	616	1 079	36	36	42	1 142	30
55Z	–	5 066.1	617	1 079	–	21	27	1 142	15
56X	111.90	5 042.4	538	1 080	12	12	18	1 017	12
56W	–	5 042.7	539	1 080	–	24	30	1 017	24
56Y	111.95	5 066.4	618	1 080	36	36	42	1 143	30
56Z	–	5 066.7	619	1 080	–	21	27	1 143	15
57X	112.00	–	–	1 081	12	–	–	1 018	12
57Y	112.05	–	–	1 081	36	–	–	1 144	30
58X	112.10	–	–	1 082	12	–	–	1 019	12
58Y	112.15	–	–	1 082	36	–	–	1 145	30
59X	112.20	–	–	1 083	12	–	–	1 020	12
59Y	112.25	–	–	1 083	36	–	–	1 146	30
**60X	–	–	–	1 084	12	–	–	1 021	12
**60Y	–	–	–	1 084	36	–	–	1 147	30
**61X	–	–	–	1 085	12	–	–	1 022	12
**61Y	–	–	–	1 085	36	–	–	1 148	30
**62X	–	–	–	1 086	12	–	–	1 023	12
**62Y	–	–	–	1 086	36	–	–	1 149	30
**63X	–	–	–	1 087	12	–	–	1 024	12
**63Y	–	–	–	1 087	36	–	–	1 150	30

Channel pairing				DME parameters					
				Interrogation				Reply	
					Pulse codes				
						DME/P mode			
DME channel number	VHF frequency MHz	MLS angle frequency MHz	MLS channel number	Frequency MHz	DME/N µs	Initial approach µs	Final approach µs	Frequency MHz	Pulse codes µs
**64X	–	–	–	1 088	12	–	–	1 151	12
**64Y	–	–	–	1 088	36	–	–	1 025	30
**65X	–	–	–	1 089	12	–	–	1 152	12
**65Y	–	–	–	1 089	36	–	–	1 026	30
**66X	–	–	–	1 090	12	–	–	1 153	12
**66Y	–	–	–	1 090	36	–	–	1 027	30
**67X	–	–	–	1 091	12	–	–	1 154	12
**67Y	–	–	–	1 091	36	–	–	1 028	30
**68X	–	–	–	1 092	12	–	–	1 155	12
**68Y	–	–	–	1 092	36	–	–	1 029	30
**69X	–	–	–	1 093	12	–	–	1 156	12
**69Y	–	–	–	1 093	36	–	–	1 030	30
70X	112.30	–	–	1 094	12	–	–	1 157	12
**70Y	112.35	–	–	1 094	36	–	–	1 031	30
71X	112.40	–	–	1 095	12	–	–	1 158	12
**71Y	112.45	–	–	1 095	36	–	–	1 032	30
72X	112.50	–	–	1 096	12	–	–	1 159	12
**72Y	112.55	–	–	1 096	36	–	–	1 033	30
73X	112.60	–	–	1 097	12	–	–	1 160	12
**73Y	112.65	–	–	1 097	36	–	–	1 034	30
74X	112.70	–	–	1 098	12	–	–	1 161	12
**74Y	112.75	–	–	1 098	36	–	–	1 035	30
75X	112.80	–	–	1 099	12	–	–	1 162	12
**75Y	112.85	–	–	1 099	36	–	–	1 036	30
76X	112.90	–	–	1 100	12	–	–	1 163	12
**76Y	112.95	–	–	1 100	36	–	–	1 037	30
77X	113.00	–	–	1 101	12	–	–	1 164	12
**77Y	113.05	–	–	1 101	36	–	–	1 038	30
78X	113.10	–	–	1 102	12	–	–	1 165	12
**78Y	113.15	–	–	1 102	36	–	–	1 039	30
79X	113.20	–	–	1 103	12	–	–	1 166	12
**79Y	113.25	–	–	1 103	36	–	–	1 040	30
80X	113.30	–	–	1 104	12	–	–	1 167	12
80Y	113.35	5 067.0	620	1 104	36	36	42	1 041	30
80Z	–	5 067.3	621	1 104	–	21	27	1 041	15

Channel pairing				DME parameters					
				Interrogation				Reply	
					Pulse codes				
						DME/P mode			
DME channel number	VHF frequency MHz	MLS angle frequency MHz	MLS channel number	Frequency MHz	DME/N µs	Initial approach µs	Final approach µs	Frequency MHz	Pulse codes µs
81X	113.40	–	–	1 105	12	–	–	1 168	12
81Y	113.45	5 067.6	622	1 105	36	36	42	1 042	30
81Z	–	5 067.9	623	1 105	–	21	27	1 042	15
82X	113.50	–	–	1 106	12	–	–	1 169	12
82Y	113.55	5 068.2	624	1 106	36	36	42	1 043	30
82Z	–	5 068.5	625	1 106	–	21	27	1 043	15
83X	113.60	–	–	1 107	12	–	–	1 170	12
83Y	113.65	5 068.8	626	1 107	36	36	42	1 044	30
83Z	–	5 069.1	627	1 107	–	21	27	1 044	15
84X	113.70	–	–	1 108	12	–	–	1 171	12
84Y	113.75	5 069.4	628	1 108	36	36	42	1 045	30
84Z	–	5 069.7	629	1 108	–	21	27	1 045	15
85X	113.80	–	–	1 109	12	–	–	1 172	12
85Y	113.85	5 070.0	630	1 109	36	36	42	1 046	30
85Z	–	5 070.3	631	1 109	–	21	27	1 046	15
86X	113.90	–	–	1 110	12	–	–	1 173	12
86Y	113.95	5 070.6	632	1 110	36	36	42	1 047	30
86Z	–	5 070.9	633	1 110	–	21	27	1 047	15
87X	114.00	–	–	1 111	12	–	–	1 174	12
87Y	114.05	5 071.2	634	1 111	36	36	42	1 048	30
87Z	–	5 071.5	635	1 111	–	21	27	1 048	15
88X	114.10	–	–	1 112	12	–	–	1 175	12
88Y	114.15	5 071.8	636	1 112	36	36	42	1 049	30
88Z	–	5 072.1	637	1 112	–	21	27	1 049	15
89X	114.20	–	–	1 113	12	–	–	1 176	12
89Y	114.25	5 072.4	638	1 113	36	36	42	1 050	30
89Z	–	5 072.7	639	1 113	–	21	27	1 050	15
90X	114.30	–	–	1 114	12	–	–	1 177	12
90Y	114.35	5 073.0	640	1 114	36	36	42	1 051	30
90Z	–	5 073.3	641	1 114	–	21	27	1 051	15
91X	114.40	–	–	1 115	12	–	–	1 178	12
91Y	114.45	5 073.6	642	1 115	36	36	42	1 052	30
91Z	–	5 073.9	643	1 115	–	21	27	1 052	15
92X	114.50	–	–	1 116	12	–	–	1 179	12
92Y	114.55	5 074.2	644	1 116	36	36	42	1 053	30
92Z	–	5 074.5	645	1 116	–	21	27	1 053	15
93X	114.60	–	–	1 117	12	–	–	1 180	12
93Y	114.65	5 074.8	646	1 117	36	36	42	1 054	30
93Z	–	5 075.1	647	1 117	–	21	27	1 054	15

Channel pairing				DME parameters					
				Interrogation				Reply	
					Pulse codes				
						DME/P mode			
DME channel number	VHF frequency MHz	MLS angle frequency MHz	MLS channel number	Frequency MHz	DME/N µs	Initial approach µs	Final approach µs	Frequency MHz	Pulse codes µs
94X	114.70	–	–	1 118	12	–	–	1 181	12
94Y	114.75	5 075.4	648	1 118	36	36	42	1 055	30
94Z	–	5 075.7	649	1 118	–	21	27	1 055	15
95X	114.80	–	–	1 119	12	–	–	1 182	12
95Y	114.85	5 076.0	650	1 119	36	36	42	1 056	30
95Z	–	5 076.3	651	1 119	–	21	27	1 056	15
96X	114.90	–	–	1 120	12	–	–	1 183	12
96Y	114.95	5 076.6	652	1 120	36	36	42	1 057	30
96Z	–	5 076.9	653	1 120	–	21	27	1 057	15
97X	115.00	–	–	1 121	12	–	–	1 184	12
97Y	115.05	5 077.2	654	1 121	36	36	42	1 058	30
97Z	–	5 077.5	655	1 121	–	21	27	1 058	15
98X	115.10	–	–	1 122	12	–	–	1 185	12
98Y	115.15	5 077.8	656	1 122	36	36	42	1 059	30
98Z	–	5 078.1	657	1 122	–	21	27	1 059	15
99X	115.20	–	–	1 123	12	–	–	1 186	12
99Y	115.25	5 078.4	658	1 123	36	36	42	1 060	30
99Z	–	5 078.7	659	1 123	–	21	27	1 060	15
100X	115.30	–	–	1 124	12	–	–	1 187	12
100Y	115.35	5 079.0	660	1 124	36	36	42	1 061	30
100Z	–	5 079.3	661	1 124	–	21	27	1 061	15
101X	115.40	–	–	1 125	12	–	–	1 188	12
101Y	115.45	5 079.6	662	1 125	36	36	42	1 062	30
101Z	–	5 079.9	663	1 125	–	21	27	1 062	15
102X	115.50	–	–	1 126	12	–	–	1 189	12
102Y	115.55	5 080.2	664	1 126	36	36	42	1 063	30
102Z	–	5 080.5	665	1 126	–	21	27	1 063	15
103X	115.60	–	–	1 127	12	–	–	1 190	12
103Y	115.65	5 080.8	666	1 127	36	36	42	1 064	30
103Z	–	5 081.1	667	1 127	–	21	27	1 064	15
104X	115.70	–	–	1 128	12	–	–	1 191	12
104Y	115.75	5 081.4	668	1 128	36	36	42	1 065	30
104Z	–	5 081.7	669	1 128	–	21	27	1 065	15
105X	115.80	–	–	1 129	12	–	–	1 192	12
105Y	115.85	5 082.0	670	1 129	36	36	42	1 066	30
105Z	–	5 082.3	671	1 129	–	21	27	1 066	15
106X	115.90	–	–	1 130	12	–	–	1 193	12
106Y	115.95	5 082.6	672	1 130	36	36	42	1 067	30
106Z	–	5 082.9	673	1 130	–	21	27	1 067	15

Channel pairing				DME parameters					
				Interrogation				Reply	
					Pulse codes				
						DME/P mode			
DME channel number	VHF frequency MHz	MLS angle frequency MHz	MLS channel number	Frequency MHz	DME/N µs	Initial approach µs	Final approach µs	Frequency MHz	Pulse codes µs
107X	116.00	–	–	1 131	12	–	–	1 194	12
107Y	116.05	5 083.2	674	1 131	36	36	42	1 068	30
107Z	–	5 083.5	675	1 131	–	21	27	1 068	15
108X	116.10	–	–	1 132	12	–	–	1 195	12
108Y	116.15	5 083.8	676	1 132	36	36	42	1 069	30
108Z	–	5 084.1	677	1 132	–	21	27	1 069	15
109X	116.20	–	–	1 133	12	–	–	1 196	12
109Y	116.25	5 084.4	678	1 133	36	36	42	1 070	30
109Z	–	5 084.7	679	1 133	–	21	27	1 070	15
110X	116.30	–	–	1 134	12	–	–	1 197	12
110Y	116.35	5 085.0	680	1 134	36	36	42	1 071	30
110Z	–	5 085.3	681	1 134	–	21	27	1 071	15
111X	116.40	–	–	1 135	12	–	–	1 198	12
111Y	116.45	5 085.6	682	1 135	36	36	42	1 072	30
111Z	–	5 085.9	683	1 135	–	21	27	1 072	15
112X	116.50	–	–	1 136	12	–	–	1 199	12
112Y	116.55	5 086.2	684	1 136	36	36	42	1 073	30
112Z	–	5 086.5	685	1 136	–	21	27	1 073	15
113X	116.60	–	–	1 137	12	–	–	1 200	12
113Y	116.65	5 086.8	686	1 137	36	36	42	1 074	30
113Z	–	5 087.1	687	1 137	–	21	27	1 074	15
114X	116.70	–	–	1 138	12	–	–	1 201	12
114Y	116.75	5 087.4	688	1 138	36	36	42	1 075	30
114Z	–	5 087.7	689	1 138	–	21	27	1 075	15
115X	116.80	–	–	1 139	12	–	–	1 202	12
115Y	116.85	5 088.0	690	1 139	36	36	42	1 076	30
115Z	–	5 088.3	691	1 139	–	21	27	1 076	15
116X	116.90	–	–	1 140	12	–	–	1 203	12
116Y	116.95	5 088.6	692	1 140	36	36	42	1 077	30
116Z	–	5 088.9	693	1 140	–	21	27	1 077	15
117X	117.00	–	–	1 141	12	–	–	1 204	12
117Y	117.05	5 089.2	694	1 141	36	36	42	1 078	30
117Z	–	5 089.5	695	1 141	–	21	27	1 078	15
118X	117.10	–	–	1 142	12	–	–	1 205	12
118Y	117.15	5 089.8	696	1 142	36	36	42	1 079	30
118Z	–	5 090.1	697	1 142	–	21	27	1 079	15
119X	117.20	–	–	1 143	12	–	–	1 206	12
119Y	117.25	5 090.4	698	1 143	36	36	42	1 080	30
119Z	–	5 090.7	699	1 143	–	21	27	1 080	15

Channel pairing				DME parameters					
				Interrogation				Reply	
					Pulse codes				
						DME/P mode			
DME channel number	VHF frequency MHz	MLS angle frequency MHz	MLS channel number	Frequency MHz	DME/N µs	Initial approach µs	Final approach µs	Frequency MHz	Pulse codes µs
120X	117.30	–	–	1 144	12	–	–	1 207	12
120Y	117.35	–	–	1 144	36	–	–	1 081	30
121X	117.40	–	–	1 145	12	–	–	1 208	12
121Y	117.45	–	–	1 145	36	–	–	1 082	30
122X	117.50	–	–	1 146	12	–	–	1 209	12
122Y	117.55	–	–	1 146	36	–	–	1 083	30
123X	117.60	–	–	1 147	12	–	–	1 210	12
123Y	117.65	–	–	1 147	36	–	–	1 084	30
124X	117.70	–	–	1 148	12	–	–	1 211	12
**124Y	117.75	–	–	1 148	36	–	–	1 085	30
125X	117.80	–	–	1 149	12	–	–	1 212	12
**125Y	117.85	–	–	1 149	36	–	–	1 086	30
126X	117.90	–	–	1 150	12	–	–	1 213	12
**126Y	117.95	–	–	1 150	36	–	–	1 087	30

* These channels are reserved exclusively for national allotments.

** These channels may be used for national allotment on a secondary basis.
The primary reason for reserving these channels is to provide protection for the secondary surveillance radar (SSR) system.

∇ 108.0 MHz is not scheduled for assignment to ILS service. The associated DME operating channel No. 17X may be assigned for emergency use. The reply frequency of channel No. 17X (i.e. 978 MHz) is also utilized for the operation of the universal access transceiver (UAT). Standards and Recommended Practices for UAT are found in Annex 10, Volume III, Part I, Chapter 12.

Table B. Allowable DME/P errors

Location	Standard	Mode	PFE	CMN
37 km (20 NM) to 9.3 km (5NM) from MLS approach reference datum	1 and 2	1A	±250 m (±820 ft) reducing linearly to ±85 m (±279 ft)	±68 m (±223 ft) reducing linearly to ±34 m (±111 ft)
9.3 km (5 NM) to MLS approach reference datum	1	FA	±85 m (±279 ft) reducing linearly to ±30 m (±100 ft)	±18 m (±60 ft)
	2	FA	±85 m (±279 ft) reducing linearly to ±12 m (±40 ft)	±12 m (±40 ft)
	see Note	IA	±100 m (±328 ft)	±68 m (±223 ft)
At MLS approach reference datum and through runway coverage	1	FA	±30 m (±100 ft)	±18 m (±60 ft)
	2	FA	±12 m (±40 ft)	±12 m (±40 ft)
Throughout back azimuth coverage volume	1 and 2	FA	±100 m (±328 ft)	±68 m (±223 ft)
	see Note	IA	±100 m (±328 ft)	±68 m (±223 ft)

Note.— At distances from 9.3 km (5 NM) to the MLS approach reference datum and throughout the back azimuth coverage, the IA mode may be used when the FA mode is not operative.

APPENDIX A. MICROWAVE LANDING SYSTEM (MLS) CHARACTERISTICS

Table A-1. Preamble timing*
(see 3.11.4.3.4)

Event	Event time slot begins at: 15.625 kHz Clock pulse (number)	Event time slot begins at: Time (milliseconds)
Carrier acquisition (CW transmission)	0	0
Receiver reference time code		
$I_1 = 1$	13	0.832
$I_2 = 1$	1	0.896
$I_3 = 1$	15	0.960
$I_4 = 0$	16	1.024
$I_5 = 1$	17	1.088**
Function identification		
I_6	18	1.152
I_7	19	1.216
I_8	20	1.280
I_9 (see 3.11.4.4.3.3)	21	1.344
I_{10}	22	1.408
I_{11}	23	1.472
I_{12}	24	1.536
End preamble	25	1.600

* Applies to all functions transmitted.
** Reference time for receiver synchronization for all function timing.

Table A-2. Approach azimuth function timing
(see 3.11.4.3.4)

Event	Event time slot begins at	
	15.625 kHz Clock pulse (number)	Time (milliseconds)
Preamble	0	0
Morse Code (see 3.11.4.6.2.1.2)	25	1.600
Antenna select	26	1.664
Rear OCI	32	2.048
Left OCI	34	2.176
Right OCI	36	2.304
TO test	38	2.432
TO scan*	40	2.560
Pause		8.760
Midscan point		9.060
FRO scan*		9.360
FRO test		15.560
End function (airborne)		15.688
End guard time; end function (ground)		15.900

* The actual commencement and completion of the TO and FRO scan transmissions are dependent on the amount of proportional guidance provided. The time slots provided will accommodate a maximum scan of plus or minus 62.0 degrees. Scan timing shall be compatible with accuracy requirements.

Table A-3. High rate approach azimuth and back azimuth function timing
(see 3.11.4.3.4)

Event	Event time slot begins at	
	15.625 kHz Clock pulse (number)	Time (milliseconds)
Preamble	0	0
Morse Code (see 3.11.4.6.2.1.2)	25	1.600
Antenna select	26	1.664
Rear OCI	32	2.048
Left OCI	34	2.176
Right OCI	36	2.304
TO test	38	2.432
TO scan*	40	2.560
Pause		6.760
Midscan point		7.060
FRO scan*		7.360
FRO test pulse		11.560
End function (airborne)		11.688
End guard time; end function (ground)		11.900

* The actual commencement and completion of the TO and FRO scan transmissions are dependent on the amount of proportional guidance provided. The time slots provided will accommodate a maximum scan of plus or minus 42.0 degrees. Scan timing shall be compatible with accuracy requirements.

Table A-4. Approach elevation function timing
(see 3.11.4.3.4)

Event	Event time slot begins at	
	15.625 kHz Clock pulse (number)	Time (milliseconds)
Preamble	0	0
Processor pause	25	1.600
OCI	27	1.728
TO scan*	29	1.856
Pause		3.406
Midscan point		3.606
FRO scan*		3.806
End function (airborne)		5.356
End guard time; end function (ground)		5.600

* The actual commencement and completion of the TO and FRO scan transmissions are dependent on the amount of proportional guidance provided. The time slots provided will accommodate a maximum scan of minus 1.5 degrees to plus 29.5 degrees. Scan timing shall be compatible with accuracy requirements.

Table A-5. Flare function timing
(see 3.11.4.3.4)

Event	Event time slot begins at	
	15.625 kHz Clock pulse (number)	Time (milliseconds)
Preamble	0	0
Processor pause	25	1.600
TO scan*	29	1.856
Pause		3.056
Midscan point		3.456
FRO scan*		3.856
End function (airborne)		5.056
End guard time; end function (ground)		5.300

* The actual commencement and completion of the TO and FRO scan transmissions are dependent on the amount of proportional guidance provided. The time slots provided will accommodate a maximum scan of minus 2.0 degrees to plus 10.0 degrees. Scan timing shall be compatible with accuracy requirements.

Table A-6. Basic data function timing
(see 3.11.4.3.4)

Event	Event time slot begins at	
	15.625 kHz Clock pulse (number)	Time (milliseconds)
Preamble	0	0
Data transmission (Bits I_{13} - I_{30})	24	1.600
Parity transmission (Bits I_{31} - I_{32})	43	2.752
End function (airborne)	45	2.880
End guard time; end function (ground)		3.100

Table A-7. Basic data
(see 3.11.4.8.2.1)

Word	Data content	Maximum time between transmissions (seconds)	Bits used	Range of values	Least significant bit	Bit number
1	PREAMBLE	1.0	12	see Note 10		I_1 - I_{12}
	Approach azimuth antenna to threshold distance		6	0 m to 6 300 m	100 m	I_{13} - I_{18}
	Approach azimuth proportional guidance sector negative limit		5	0° to 60° (see Note 11)	2°	I_{19} - I_{23}
	Approach azimuth proportional guidance sector positive limit		5	0° to 60° (see Note 11)	2°	I_{24} - I_{28}
	Clearance signal type		1	see Note 9		I_{29}
	SPARE		1	see Note 12		I_{30}
	PARITY		2	see Note 1		I_{31} - I_{32}
2	PREAMBLE	0.16	12	see Note 10		I_1 - I_{12}
	Minimum glide path		7	2° to 14.7°	0.1°	I_{13} - I_{19}
	Back azimuth status		1	see Note 2		I_{20}
	DME status		2	see Note 7		I_{21} - I_{22}
	Approach azimuth status		1	see Note 2		I_{23}
	Approach elevation status		1	see Note 2		I_{24}
	SPARE		6	see Notes 6 and 12		I_{25} - I_{30}

Word	Data content	Maximum time between transmissions (seconds)	Bits used	Range of values	Least significant bit	Bit number
3	PREAMBLE	1.0	12	see Note 10		I_1 - I_{12}
	Approach azimuth beamwidth		3	0.5° to 4° (See Note 8)	0.5°	I_{13} - I_{15}
	Approach elevation beamwidth		3	0.5° to 2.5° (See Note 8)	0.5°	I_{16} - I_{18}
	DME distance		9	0 m to 6 387.5 m	12.5 m	I_{19} - I_{27}
	SPARE		3	see Note 12		I_{28} - I_{30}
	PARITY		2	see Note 1		I_{31} - I_{32}
4	PREAMBLE	1.0	12	see Notes 4 and 10		I_1 - I_{12}
	Approach azimuth magnetic Orientation		9	0° to 359°	1°	I_{13} - I_{21}
	Back azimuth magnetic orientation		9	0° to 359°	1°	I_{22} - I_{30}
	PARITY		2	see Note 1		I_{31} - I_{32}
5	PREAMBLE	1.0	12	see Notes 5 and 10		I_1 - I_{12}
	Back azimuth proportional guidance sector negative limit		5	0° to 40° (see Note 11)	2°	I_{13} - I_{17}
	Back azimuth proportional guidance sector positive limit		5	0° to 40° (see Note 11)	2°	I_{18} - I_{22}
	Back azimuth beamwidth		3	0.5° to 4.0° (see Note 8)	0.5°	I_{23} - I_{25}
	Back azimuth status		1	see Note 2		I_{26}
	SPARE		4	see Notes 3 and 12		I_{27} - I_{30}
	PARITY		2	see Note 1		I_{31} - I_{32}
6	PREAMBLE	1.0	12	see Notes 4 and 10		I_1 - I_{12}
	MLS ground equipment Identification			Letters A to Z		
	Character 2		6			I_{13} - I_{18}
	Character 3		6			I_{19} - I_{24}
	Character 4		6			I_{25} - I_{30}
	PARITY		2	see Note 1		I_{31} - I_{32}

NOTES.—

1. Parity bits I_{31} and I_{32} are chosen to satisfy the equations:
   $I_{13} + I_{14} ... + I_{29} + I_{30} + I_{31} = ODD$
   $I_{14} + I_{16} + I_{18} ... + I_{28} + I_{30} + I_{32} = ODD$.
2. Coding for status bit:
   0 = function not radiated, or radiated in test mode (not reliable for navigation);
   1 = function radiated in normal mode (in Basic data word 2 the back azimuth status also indicates that back azimuth transmission is to follow).
3. These bits are reserved for future applications. One possible application is to define the back azimuth deviation scale factor.
4. Basic data words 4 and 6 are transmitted in both approach azimuth and back azimuth coverages if back azimuth guidance is provided, while retaining the maximum specified time between transmissions in each coverage sector.
5. Basic data word 5 is transmitted in both approach azimuth and back azimuth coverages if back azimuth guidance is provided, while retaining the maximum specified time between transmissions in each coverage sector.
6. These bits are reserved for future applications requiring high transmission rates.
7. Coding for I_{21} and I_{22}:

I_{21}	I_{22}	
0	0	DME transponder inoperative or not available
1	0	Only IA mode or DME/N available
0	1	FA mode, Standard 1, available
1	1	FA mode, Standard 2, available

8. The value coded is the actual beamwidth (as defined in Chapter 3, 3.11.1) rounded to the nearest 0.5 degree.
9. Code for I_{29} is:
   0 = pulse clearance signal
   1 = scanning clearance signal.
10. The 12 data bits of the preamble are preceded by an 0.832 millisecond interval (13 clock pulses) of CW for carrier acquisition (see Table A-1).
11. The scan limits are greater than the proportional guidance sector limits shown in Basic data words 1 and 5 as described in 3.11.4.5.1.
12. All spare bits are set to ZERO.

Table A-8. Auxiliary data function timing

(see 3.11.4.3.4)

Event	Event time slot begins at	
	15.625 kHz Clock pulse (number)	Time (milliseconds)
Preamble	0	0
Address transmission (Bits I_{13} - I_{20})	25	1.600
Data transmission (Bits I_{21} - I_{69})	33	2.112
Parity transmission (Bits I_{70} - I_{76})	82	5.248
End function (airborne)	89	5.696
End guard time; end function (ground)		5.900

Table A-9. Auxiliary data words address codes

No.	I_{13}	I_{14}	I_{15}	I_{16}	I_{17}	I_{18}	I_{19}	I_{20}	No.	I_{13}	I_{14}	I_{15}	I_{16}	I_{17}	I_{18}	I_{19}	I_{20}
1	0	0	0	0	0	1	1	1	33	1	0	0	0	0	1	0	1
2	0	0	0	0	1	0	1	0	34	1	0	0	0	1	0	0	0
3	0	0	0	0	1	1	0	1	35	1	0	0	0	1	1	1	1
4	0	0	0	1	0	0	1	1	36	1	0	0	1	0	0	0	1
5	0	0	0	1	0	1	0	0	37	1	0	0	1	0	1	1	0
6	0	0	0	1	1	0	0	1	38	1	0	0	1	1	0	1	1
7	0	0	0	1	1	1	1	0	39	1	0	0	1	1	1	0	0
8	0	0	1	0	0	0	1	0	40	1	0	1	0	0	0	0	0
9	0	0	1	0	0	1	0	1	41	1	0	1	0	0	1	1	1
10	0	0	1	0	1	0	0	0	42	1	0	1	0	1	0	1	0
11	0	0	1	0	1	1	1	1	43	1	0	1	0	1	1	0	1
12	0	0	1	1	0	0	0	1	44	1	0	1	1	0	0	1	1
13	0	0	1	1	0	1	1	0	45	1	0	1	1	0	1	0	0
14	0	0	1	1	1	0	1	1	46	1	0	1	1	1	0	0	1
15	0	0	1	1	1	1	0	0	47	1	0	1	1	1	1	1	0
16	0	1	0	0	0	0	1	1	48	1	1	0	0	0	0	0	1
17	0	1	0	0	0	1	0	0	49	1	1	0	0	0	1	1	0
18	0	1	0	0	1	0	0	1	50	1	1	0	0	1	0	1	1
19	0	1	0	0	1	1	1	0	51	1	1	0	0	1	1	0	0
20	0	1	0	1	0	0	0	0	52	1	1	0	1	0	0	1	0
21	0	1	0	1	0	1	1	1	53	1	1	0	1	0	1	0	1
22	0	1	0	1	1	0	1	0	54	1	1	0	1	1	0	0	0
23	0	1	0	1	1	1	0	1	55	1	1	0	1	1	1	1	1
24	0	1	1	0	0	0	0	1	56	1	1	1	0	0	0	1	1
25	0	1	1	0	0	1	1	0	57	1	1	1	0	0	1	0	0
26	0	1	1	0	1	0	1	1	58	1	1	1	0	1	0	0	1
27	0	1	1	0	1	1	0	0	59	1	1	1	0	1	1	1	0
28	0	1	1	1	0	0	1	0	60	1	1	1	1	0	0	0	0
29	0	1	1	1	0	1	0	1	61	1	1	1	1	0	1	1	1
30	0	1	1	1	1	0	0	0	62	1	1	1	1	1	0	1	0
31	0	1	1	1	1	1	1	1	63	1	1	1	1	1	1	0	1
32	1	0	0	0	0	0	1	0	64	0	0	0	0	0	0	0	0

Note.— Parity bits I_{19} and I_{20} are chosen to satisfy the equations:

$I_{13} + I_{14} + I_{15} + I_{16} + I_{17} + I_{18} + I_{19} = \text{EVEN}$

$I_{14} + I_{16} + I_{18} + I_{20} = \text{EVEN}$

Table A-10. Auxiliary data
(see 3.11.4.8.3.1)

Word	Data content	Type of data	Maximum time between transmissions (seconds)	Bits used	Range of values	Least significant bit	Bit number
A1	PREAMBLE	digital	1.0	12	see Note 6		I_1 - I_{12}
	Address			8			I_{13} - I_{20}
	Approach azimuth antenna offset			10	–511 m to +511 m (see Note 3)	1 m	I_{21} - I_{30}
	Approach azimuth antenna to MLS datum point distance			13	0 m to 8 191 m	1 m	I_{31} - I_{43}
	Approach azimuth alignment with runway centre line			12	–20.47° to +20.47° (see Notes 3 and 7)	0.01°	I_{44} - I_{55}
	Approach azimuth antenna coordinate system			1	See Note 2		I_{56}
	Approach azimuth antenna height			7	–63 m to +63 m (see Note 3)	1 m	I_{57} - I_{63}
	SPARE			6	See Note 8		I_{64} - I_{69}
	PARITY			7	See Note 1		I_{70} - I_{76}
A2	PREAMBLE	digital	1.0	12	See Note 6		I_1 - I_{12}
	Address			8			I_{13} - I_{20}
	Approach elevation antenna offset			10	–511 m to +511 m (see Note 3)	1 m	I_{21} - I_{30}
	MLS datum point to threshold distance			10	0 m to 1 023 m	1 m	I_{31} - I_{40}
	Approach elevation antenna height			7	–6.3 m to +6.3 m (see Note 3)	0.1 m	I_{41} - I_{47}
	MLS datum point elevation			13	–4 095 m to +4 095 m (see Note 3)	1 m	I_{48} - I_{60}
	Runway threshold height			7	–6.3 m to +6.3 m (see Note 3)	0.1 m	I_{61} - I_{67}
	SPARE			2	See Note 8		I_{68} - I_{69}
	PARITY			7	See Note 1		I_{70} - I_{76}
A3	PREAMBLE (see Note 4)	digital	1.0	12	See Note 6		I_1 - I_{12}
	Address			8			I_{13} - I_{20}
	DME offset			12	–2 047 m to +2 047 m (see Note 3)	1 m	I_{21} - I_{32}
	DME to MLS datum point distance			14	–8 191 m to +8 191 m (see Note 3)	1 m	I_{33} - I_{46}

Word	Data content	Type of data	Maximum time between transmissions (seconds)	Bits used	Range of values	Least significant bit	Bit number
	DME antenna height			7	–63 m to +63 m (see Note 3)	1 m	I_{47} - I_{53}
	Runway stop-end distance			14	0 m to 16 383 m	1 m	I_{54} - I_{67}
	SPARE			2	See Note 8		I_{68} - I_{69}
	PARITY			7	See Note 1		I_{70} - I_{76}
A4	PREAMBLE (see Note 5)	digital	1.0	12	See Note 6		I_1 - I_{12}
	Address			8			I_{13} - I_{20}
	Back azimuth antenna offset			10	–511 m to +511 m (see Note 3)	1 m	I_{21} - I_{30}
	Back azimuth to MLS datum point distance			11	0 m to 2 047 m	1 m	I_{31} - I_{41}
	Back azimuth alignment with runway centre line			12	–20.47° to +20.47° (see Notes 3 and 7)	0.01°	I_{42} - I_{53}
	Back azimuth antenna coordinate system			1	See Note 2		I_{54}
	Back azimuth antenna height			7	–63 m to +63 m (see Note 3)	1 m	I_{55} - I_{61}
	SPARE			8	See Note 8		I_{62} - I_{69}
	PARITY			7	See Note 1		I_{70} - I_{76}

NOTES.—

1. Parity bits I_{70} to I_{76} are chosen to satisfy the equations which follow.

For bit I_{70}

$$EVEN = (I_{13} + ... + I_{18}) + I_{20} + I_{22} + I_{24} + I_{25} + I_{28} + I_{29} + I_{31} + I_{32} + I_{33} + I_{35} + I_{36} + I_{38} + I_{41} + I_{44} + I_{45} + I_{46} + I_{50} + (I_{52} + ... + I_{55}) + I_{58} + I_{60} + I_{64} + I_{65} + I_{70}$$

For bit I_{71}

$$EVEN = (I_{14} + ... + I_{19}) + I_{21} + I_{23} + I_{25} + I_{26} + I_{29} + I_{30} + I_{32} + I_{33} + I_{34} + I_{36} + I_{37} + I_{39} + I_{42} + I_{45} + I_{46} + I_{47} + I_{51} + (I_{53} + ... + I_{56}) + I_{59} + I_{61} + I_{65} + I_{66} + I_{71}$$

For bit I_{72}

$$EVEN = (I_{15} + ... + I_{20}) + I_{22} + I_{24} + I_{26} + I_{27} + I_{30} + I_{31} + I_{33} + I_{34} + I_{35} + I_{37} + I_{38} + I_{40} + I_{43} + I_{46} + I_{47} + I_{48} + I_{52} + (I_{54} + ... + I_{57}) + I_{60} + I_{62} + I_{66} + I_{67} + I_{72}$$

For bit I_{73}

$$EVEN = (I_{16} + ... + I_{21}) + I_{23} + I_{25} + I_{27} + I_{28} + I_{31} + I_{32} + I_{34} + I_{35} + I_{36} + I_{38} + I_{39} + I_{41} + I_{44} + I_{47} + I_{48} + I_{49} + I_{53} + (I_{55} + ... + I_{58}) + I_{61} + I_{63} + I_{67} + I_{68} + I_{73}$$

For bit I_{74}

$$EVEN = (I_{17} + ... + I_{22}) + I_{24} + I_{26} + I_{28} + I_{29} + I_{32} + I_{33} + I_{35} + I_{36} + I_{37}\ \ I_{39} + I_{40} + I_{42} + I_{45} + I_{48} + I_{49} + I_{50} + I_{54} + (I_{56} + ... + I_{59}) + I_{62} + I_{64} + I_{68} + I_{69} + I_{74}$$

For bit I_{75}

$$EVEN = (I_{13} + ... + I_{17}) + I_{19} + I_{21} + I_{23} + I_{24} + I_{27} + I_{28} + I_{30} + I_{31} + I_{32} + I_{34} + I_{35} + I_{37} + I_{40} + I_{43} + I_{44} + I_{45} + I_{49} + (I_{51} + ... + I_{54}) + I_{57} + I_{59} + I_{63} + I_{64} + I_{69} + I_{75}$$

For bit I_{76}

$$EVEN = I_{13} + I_{14} + ... + I_{75} + I_{76}$$

2. Code for antenna coordinate system is 0 = conical.

3. The convention for the coding of negative numbers is as follows:
   MSB is the sign bit:
   0 = positive
   1 = negative
   Other bits represent the absolute value.
   The convention for the antenna location is as follows:
   As viewed from the MLS approach reference datum looking toward the MLS datum point, a positive number represents a location to the right of the runway centre line (lateral offset) or above the runway (vertical offset), or towards the stop end of the runway (longitudinal distance).
   The convention for the alignment is as follows:
   As viewed from above, a positive number represents clockwise rotation from the runway centre line to the respective zero-degree azimuth.
4. Data word A3 is transmitted in both approach azimuth and back azimuth coverages if back azimuth guidance is provided, while retaining the maximum specified time between transmissions in each coverage sector.
5. Data word A4 is transmitted in both approach azimuth and back azimuth coverages if back azimuth guidance is provided, while retaining the maximum specified time between transmissions in each coverage sector.
6. The 12 data bits of the preamble are preceded by an 0.832 millisecond interval (13 clock pulses) of CW for carrier acquisition (see Table A-1).
7. See Table A-12 for data words B42 and B43 which are defined for applications that require azimuth antenna rotation greater than the +20.47° supported by the data items in A1, for azimuth, and A4, for back azimuth. At a facility with the approach azimuth rotation greater than +20.47°, B42 is transmitted in place of A1. At a facility with the back azimuth rotation greater than +20.47°, B43 is transmitted in place of A4.
8. All spare bits are set to ZERO.

Table A-11. Definitions of auxiliary data B items

(see 3.11.4.8.3.2)

Note.— Definitions of auxiliary data B items supporting MLS/RNAV procedures are shown in Table A-13.

a) *Latitude of MLS datum point* shall be the latitude coordinate of the MLS datum point as defined by the World Geodetic System — 1984 (WGS-84) reference ellipsoid, coordinate system and associated datum.

b) *Longitude of the MLS datum point* shall be the longitude coordinate of the MLS datum point as defined by the same reference ellipsoid, coordinate system, and datum noted in item a).

c) *Vertical coordinate of the MLS datum point* shall be the vertical coordinate of the MLS datum point as defined by the same reference ellipsoid, coordinate system, and datum noted in item a).

Note.— Although WGS-84 has been approved as the ICAO Standard for geographical coordinates indicating latitude and longitude, introduction of vertical WGS-84 coordinates is pending. Until this introduction, an elevation referenced to mean sea level (msl) can continue to be used.

d) *Approach azimuth true north orientation* shall represent the angle measured in the horizontal plane clockwise from True North to the zero-degree approach azimuth, originating from the approach azimuth antenna. The vertex of the measured angle shall be the approach azimuth antenna phase centre.

e) *Runway visual range (RVR)* shall represent measurement of instrument RVR at touchdown zone, mid-point and stop end of the runway together with the trend indication, provided in accordance with Annex 3, Chapter 4.

f) *Surface wind* shall represent wind speed and wind direction (magnetic), provided in accordance with Annex 3, Chapter 4.

g) *Approach azimuth antenna offset* shall represent the minimum distance between the approach azimuth antenna phase centre and a vertical plane containing the runway centre line.

h) *Approach azimuth antenna to MLS datum point distance* shall represent the minimum distance between the approach azimuth antenna phase centre and the vertical plane perpendicular to the runway centre line and containing the MLS datum point.

i) *Approach azimuth alignment with runway centre line* shall represent the minimum angle between the zero-degree approach azimuth and the runway centre line.

j) *Approach azimuth antenna height* shall represent the vertical location of the antenna phase centre with respect to the MLS datum point.

k) *Back azimuth antenna offset* shall represent the minimum distance between the back azimuth antenna phase centre and a vertical plane containing the runway centre line.

l) *Back azimuth antenna to MLS datum point distance* shall represent the minimum distance between the back azimuth antenna and the vertical plane perpendicular to the runway centre line which contains the MLS datum point.

m) *Back azimuth alignment with runway centre line* shall represent the minimum angle between the zero-degree back azimuth and the runway centre line.

n) *Back azimuth antenna height* shall represent the vertical location of the antenna phase centre with respect to the MLS datum point.

o) *Primary runway number* shall represent the primary runway number as defined in Annex 14, Volume I, Chapter 5.

p) *Primary runway letter* shall represent the primary runway letter as defined in Annex 14, Volume I, Chapter 5, where used to differentiate between parallel runways.

q) *Secondary runway number* shall represent the secondary runway number as defined in Annex 14, Volume I, Chapter 5.

r) *Secondary runway letter* shall represent the secondary runway letter as defined in Annex 14, Volume I, Chapter 5, where used to differentiate between parallel runways.

s) *Elevation guidance to secondary runway* shall indicate whether or not elevation guidance may be used to the secondary runway, and if so, whether it is directly usable as a raw angle or requires computed glide path.

t) *Minimum glide path to secondary runway* shall represent the lowest angle of descent along the secondary runway centre line.

u) *Approach azimuth alignment with secondary runway centre line* shall represent the minimum angle between the zero-degree approach azimuth and the secondary runway centre line.

v) *Secondary runway threshold X coordinate* shall represent the minimum distance between the secondary runway threshold and the vertical plane perpendicular to the primary runway centre line containing the MLS datum point.

w) *Secondary runway threshold Y coordinate* shall represent the minimum distance between the secondary runway threshold and the vertical plane containing the primary runway centre line.

x) *Secondary runway threshold Z coordinate* shall represent the height of the secondary runway threshold above the MLS datum point.

y) *Secondary runway threshold crossing height* shall represent the height above the secondary runway threshold at which the computed glide path crosses the threshold.

z) *Virtual azimuth to secondary runway threshold distance* shall represent the distance to the secondary runway threshold from the point to be considered as the origin for lateral guidance to that runway.

Note.— This distance may be used by the MLS receiver in a manner similar to the approach azimuth antenna to threshold distance, to establish the lateral deviation scale factor.

Table A-12. Auxiliary data B
(see 3.11.4.8.3)

Word	Data content	Type of data	Maximum time between transmissions (seconds)	Bits used	Bits used	Least significant bit	Bit number
Words B1 through B39: Time-invariant (fixed) data items supporting MLS/RNAV procedures (see Table A-15)							
Words B40 through B54: Other fixed data items							
B40	PREAMBLE	digital	2.0	12	see Note 6		I_1 - I_{12}
	Address			8			I_{13} - I_{20}
	Latitude of MLS datum point			23	–324 000.0 arc seconds to +324 000.0 arc seconds (see Note 2)	0.1 arc seconds	I_{21} - I_{43}
	Longitude of MLS datum point			24	–648 000.0 arc seconds to +648 000.0 arc seconds (see Note 2)	0.1 arc seconds	I_{44} - I_{67}
	SPARE			2	see Note 9		I_{68} - I_{69}
	PARITY			7	see Note 1		I_{70} - I_{76}
B41	PREAMBLE	digital	2.0	12	see Note 6		I_1 - I_{12}
	Address			8			I_{13} -I_{20}
	Vertical coordinate of MLS datum point			13	–4 095 m to +4 095 m (see Note 2)	1 m	I_{21} - I_{33}
	Approach azimuth True North orientation			16	0° to 359.99°	0.01°	I_{34} - I_{45}
	SPARE			20			I_{50} - I_{69}
	PARITY			7	see Note 1		I_{70} - I_{76}
B42	PREAMBLE (see Note 5)	digital	1.0	12	see Note 6		I_1 - I_{12}

Word	Data content	Type of data	Maximum time between transmissions (seconds)	Bits used	Bits used	Least significant bit	Bit number
	Address			8			I_{13} - I_{20}
	Approach azimuth antenna offset			10	–511 m to +511 m (see Note 2)	1 m	I_{21} - I_{30}
	Approach azimuth antenna to MLS datum point distance			13	0 m to 8 191 m	1 m	I_{31} - I_{43}
	Approach azimuth alignment with runway centre line			14	–81.91° to +81.91° (see Note 2)	0.01°	I_{44} - I_{67}
	Approach azimuth antenna height			7	–63 m to +63 m (see Note 2)	1 m	I_{58} - I_{64}
	SPARE			5	see Note 9		I_{65} - I_{69}
	PARITY			7	see Note 1		I_{70} - I_{76}
B43	PREAMBLE (see Notes 4 and 5)	digital	1.0	12	see Note 6		I_{1} - I_{12}
	Address			8			I_{13} - I_{20}
	Back azimuth antenna offset			10	–511 m to +511 m (see Note 2)	1 m	I_{21} - I_{30}
	Back azimuth antenna to MLS datum point distance			11	0 m to 2 047 m	1 m	I_{31} - I_{41}
	Back azimuth alignment with runway centre line			14	–81.91° to +81.91° (see Note 2)	0.01°	I_{42} - I_{55}
	Back azimuth antenna height			7	–63 m to +63 m (see Note 2)	1 m	I_{56} - I_{62}
	SPARE			7	see Note 9		I_{63} - I_{69}
	PARITY			7	see Note 1		I_{70} - I_{76}
B44	PREAMBLE	digital	2.0	12	see Note 6		I_{1} - I_{12}
	Address			8			I_{13} - I_{20}
	Primary runway number			6	0 to 36 (see Note 10)		I_{21} - I_{26}
	Primary runway letter			2	see Note 7		I_{27} - I_{28}
	Secondary runway number			6	0 to 36 (see Note 10)		I_{29} - I_{34}
	Secondary runway letter			2	see Note 7		I_{35} - I_{36}
	Elevation guidance to secondary runway			2	see Note 8		I_{37} - I_{38}
	Minimum glide path to secondary runway			7	2° to 14.7°	0.1°	I_{39} - I_{45}

Word	Data content	Type of data	Maximum time between transmissions (seconds)	Bits used	Bits used	Least significant bit	Bit number
	Approach azimuth alignment with secondary runway centre line			16	±180.00°	0.01°	I_{46} - I_{61}
	SPARE			8	see Note 9		I_{62} - I_{69}
	PARITY			7	see Note 1		I_{70} - I_{76}
B45	PREAMBLE	digital	2.0	12	see Note 6		I_1 - I_{12}
	Address			8			I_{13} - I_{20}
	Secondary runway threshold X coordinate			15	±16 384 m	1 m	I_{21} - I_{35}
	Secondary runway threshold Y coordinate			15	±16 384 m	1 m	I_{36}- I_{50}
	Secondary runway threshold Z coordinate			8	±127 m	1 m	I_{51} - I_{58}
	Secondary runway threshold crossing height			5	0 to 31 m	1 m	I_{59} - I_{63}
	Virtual azimuth to secondary runway threshold distance			6	0 to 6 300 m	100 m	I_{64} - I_{69}
	PARITY			7	see Note 1		I_{70} - I_{76}
Words B55 through B64: Time-varying data items. *(Note.— Word B55 only is defined below.)*							
B55	PREAMBLE	digital	10.0	12	see Note 6		I_1 - I_{12}
	Address			8			I_{13} - I_{20}
	RVR (touchdown zone)			11	0 - 2 555 m (see Note 3)	5 m	I_{21} - I_{31}
	RVR (mid-point)			11	0 - 2 555 m (see Note 3)	5 m	I_{32} - I_{42}
	RVR (stop end)			11	0 - 2 555 m (see Note 3)	5 m	I_{43} - I_{53}
	Surface wind speed			7	0 - 127 kt	1 kt	I_{54} - I_{60}
	Surface wind direction (magnetic)			9	0 - 359°	1°	I_{61} - I_{69}
	PARITY			7	see Note 1		I_{70} - I_{76}

NOTES.—

1. Parity bits I_{70} to I_{76} are chosen to satisfy the equations which follow.

   For bit I_{70}

   $$\text{EVEN} = (I_{13} + \ldots + I_{18}) + I_{20} + I_{22} + I_{24} + I_{25} + I_{28} + I_{29} + I_{31} + I_{32} + I_{33} + I_{35} + I_{36} + I_{38} + I_{41} + I_{44} + I_{45} + I_{46} + I_{50} + (I_{52} + \ldots + I_{55}) + I_{58} + I_{60} + I_{64} + I_{65} + I_{70}$$

   For bit I_{71}

EVEN = $(I_{14} + ... + I_{19}) + I_{21} + I_{23} + I_{25} + I_{26} + I_{29} + I_{30} + I_{32} + I_{33} + I_{34} + I_{36} + I_{37} + I_{39} + I_{42} + I_{45} + I_{46} + I_{47} + I_{51} + (I_{53} + ... + I_{56}) + I_{59} + I_{61} + I_{65} + I_{66} + I_{71}$

For bit I_{72}

EVEN = $(I_{15} + ... + I_{20}) + I_{22} + I_{24} + I_{26} + I_{27} + I_{30} + I_{31} + I_{33} + I_{34} + I_{35} + I_{37} + I_{38} + I_{40} + I_{43} + I_{46} + I_{47} + I_{48} + I_{52} + (I_{54} + ... + I_{57}) + I_{60} + I_{62} + I_{66} + I_{67} + I_{72}$

For bit I_{73}

EVEN = $(I_{16} + ... + I_{21}) + I_{23} + I_{25} + I_{27} + I_{28} + I_{31} + I_{32} + I_{34} + I_{35} + I_{36} + I_{38} + I_{39} + I_{41} + I_{44} + I_{47} + I_{48} + I_{49} + I_{53} + (I_{55} + ... + I_{58}) + I_{61} + I_{63} + I_{67} + I_{68} + I_{73}$

For bit I_{74}

EVEN = $(I_{17} + ... + I_{22}) + I_{24} + I_{26} + I_{28} + I_{29} + I_{32} + I_{33} + I_{35} + I_{36} + I_{37} + I_{39} + I_{40} + I_{42} + I_{45} + I_{48} + I_{49} + I_{50} + I_{54} + (I_{56} + ... + I_{59}) + I_{62} + I_{64} + I_{68} + I_{69} + I_{74}$

For bit I_{75}

EVEN = $(I_{13} + ... + I_{17}) + I_{19} + I_{21} + I_{23} + I_{24} + I_{27} + I_{28} + I_{30} + I_{31} + I_{32} + I_{34} + I_{35} + I_{37} + I_{40} + I_{43} + I_{44} + I_{45} + I_{49} + (I_{51} + ... + I_{54}) + I_{57} + I_{59} + I_{63} + I_{64} + I_{69} + I_{75}$

For bit I_{76}

EVEN = $I_{13} + I_{14} + ... + I_{75} + I_{76}$

2. The convention for the coding of negative numbers is as follows:
   MSB is the sign bit:
   0 = positive
   1 = negative
   Other bits represent the absolute value.
   The convention for the antenna location is as follows:
   As viewed from the MLS approach reference datum looking toward the MLS datum point, a positive number represents a location to the right of the runway centre line (lateral offset) or above the runway (vertical offset), or towards the stop end of the runway (longitudinal distance).
   The convention for the alignment is as follows:
   As viewed from above, a positive number represents clockwise rotation from the runway centre line to the respective zero-degree guidance radial.
   The convention for geodetic coordinates is as follows:
   A positive number represents a northern latitude or eastern longitude.
   A negative number represents a southern latitude or western longitude.
3. The tenth and eleventh bits transmitted for each RVR value are used to provide trend information. The convention for coding is as follows:

	Tenth bit	Eleventh bit
Off	0	0
Decreasing	1	0
Equal	0	1
Increasing	1	1

4. When used, data word B43 is transmitted in both approach azimuth and back azimuth coverage sectors if back azimuth guidance is provided, while retaining the specified maximum time between transmissions in each area.
5. Data words B42 and B43 are defined for applications that require azimuth antenna rotation greater than the 20.47° supported by the data items in A1, for azimuth, and A4, for back azimuth. At a facility with approach azimuth rotation greater than 20.47°, B42 is transmitted in place of A1. At a facility with the back azimuth rotation greater than 20.47°, B43 is transmitted in place of A4.
6. The 12 data bits of the preamble are preceded by an 0.832 millisecond interval (13 clock pulses) of CW for carrier acquisition (see Table A-1).
7. The convention for coding is as follows:
   0 = no letter
   1 = R (right)
   2 = C (centre)
   3 = L (left)
8. The convention for coding is as follows:
   0 = not provided
   1 = raw elevation guidance
   2 = computed glide path
   3 = code not allowed
9. All spare bits are set to ZERO.
10. Runway number designation 0 is for heliport operations.

Table A-13. Definitions of auxiliary data B items concerning MLS/RNAV procedure database
(see 3.11.4.8.3.2)

a) *Number of approach azimuth procedure descriptors* shall represent the total number of named approach and departure procedures for which procedure descriptor words are transmitted in the approach azimuth coverage sector.

Note.— Missed approaches are not counted, as they do not use procedure descriptor words. Computed centre line procedures to the primary runway *are counted if a procedure descriptor is transmitted, even though associated waypoint data are not transmitted in auxiliary words B1 to B39.*

b) *Number of back azimuth procedure descriptors* shall represent the total number of named approach and departure procedures for which procedure descriptor words are transmitted in the back azimuth coverage sector.

Note.— Missed approaches are not counted, as they do not use procedure descriptor words.

c) *Last approach azimuth database word* shall represent the address code of the last auxiliary data word within the range B1 to B39 which is transmitted in the approach azimuth coverage sector, as defined by bits I_{13} to I_{18} of that word.

d) *First back azimuth database word* shall represent the address code of the first auxiliary data word within the range B1 to B39 which is transmitted in the back azimuth coverage sector, as defined by bits I_{13} to I_{18} of that word.

e) *Approach azimuth CRC code* shall represent the coefficients of the cyclic redundancy check code for the approach azimuth procedure database.

f) *Back azimuth CRC code* shall represent the coefficients of the cyclic redundancy check code for the back azimuth procedure database.

g) *Word B42 transmitted* shall indicate whether auxiliary data word B42 is transmitted in lieu of word A1.

h) *Word A4 transmitted* shall indicate whether auxiliary data word A4 is transmitted.

i) *Word B43 transmitted* shall indicate whether auxiliary data word B43 is transmitted.

j) *Back azimuth map/CRC* indicator shall indicate whether auxiliary data word B39 is employed as a back azimuth map/CRC word or as an approach azimuth waypoint data word.

k) *Basic indicator* shall represent the name of the first flown waypoint in an approach procedure, or the last flown waypoint in a departure procedure. The name shall consist of five alpha characters coded in accordance with bits b_1 to b_5 of International Alphabet No. 5.

l) *Validity indicator* shall represent the revision level of the approach or departure procedure. The validity indicator shall be a number from 1 to 9.

m) *Route indicator* shall represent the route to or from the waypoint named by the basic indicator. The route indicator shall be a single alpha character coded in accordance with bits b_1 to b_5 of International Alphabet No. 5. The letters “I” and “O” shall not be used. Each of the 24 available route indicators shall be assigned not more than once within the combined set of approach azimuth and back azimuth procedure descriptor words.

Note.— The restriction on the unique assignment of route indicators for MLS/RNAV operations is a departure from normal route assignment practice necessary to enhance the integrity of procedure selection and reduce pilot workload.

n) *Runway number* shall represent the runway number as defined in Annex 14, Volume I, Chapter 5.

o) *Runway letter* shall represent the runway letter as defined in Annex 14, Volume I, Chapter 5, where used to differentiate between parallel runways.

p) *Procedure type* shall indicate whether the procedure is an approach procedure or a departure procedure.

q) *First waypoint index* shall represent the sequential position, within the approach azimuth database or back azimuth database, of the waypoint definition data for the first encoded waypoint of the procedure.

r) *X coordinate* shall represent the X coordinate of a given waypoint in the coordinate system defined.

s) *Y coordinate follows* shall indicate whether or not the Y coordinate is transmitted for a given waypoint. If the Y coordinate is not transmitted, the Y coordinate is assumed to be zero.

t) *Y coordinate* shall represent the Y coordinate of a given waypoint in the coordinate system defined.

u) *Z coordinate follows* shall indicate whether or not the Z coordinate is transmitted for a given waypoint.

v) *Z coordinate* shall represent the Z coordinate of given waypoint in the coordinate system defined.

w) *Next segment/field identifier* shall indicate whether the next segment of a given procedure is straight or curved and indicate which data fields follow the waypoint coordinates.

x) *Threshold waypoint height* shall represent the height of the primary runway threshold waypoint above the runway threshold.

y) *Virtual azimuth to waypoint distance* shall represent the distance to the waypoint from the point to be considered as the origin for lateral guidance for an approach procedure not leading to the primary runway threshold.

Note.— This distance may be used by the MLS receiver in a manner *similar to the approach azimuth antenna to threshold distance, to establish the lateral deviation scale factor for the procedure.*

z) *Next waypoint index* shall represent the sequential position, within the approach azimuth database or back azimuth database, of the waypoint definition data for the next waypoint in the procedure.

Note.— The next waypoint index may be used *to permit sharing of one or more waypoints which have been explicitly defined as a part of another procedure. The shared waypoints are the final ones for approach procedures and the initial ones for missed approach and departure procedures.*

aa) *Missed approach index* shall represent the sequential position, within the approach azimuth database or back azimuth database, of the waypoint definition data for the first encoded (last flown) waypoint of the associated missed approach procedure.

Table A-14. MLS/RNAV procedure database structure
(see 3.11.4.8.3.2)

Database	Word	Data content
Approach azimuth	B1	Approach azimuth map/CRC word
	B2	Procedure 1 descriptor word
	. . .	. . .
	. . .	. . .
	B(M+1)	Procedure "M" descriptor word (see Note 1)
	B(M+2) to B(a)	Waypoint data words
	B(a+1) to B(b–1)	Not used.
Back azimuth (see Note 2)	B(b)	Procedure 1 descriptor word
	. . .	. . .
	. . .	. . .
	B(b+N–1)	Procedure "N" descriptor word (see Note 1)
	B(b+N) to B(38)	Waypoint data words
	B39	Back azimuth map/CRC word

NOTES.—

1. Parameter "M" represents the number of named approach and departure procedures which commence within the approach azimuth coverage sector. Parameter "N" represents the number of named approach and departure procedures which commence within the back azimuth coverage sector.
2. A facility without a back azimuth database may employ all words up to B39 for the approach azimuth database.

Table A-15. Auxiliary data B words B1 through B39
(see 3.11.4.8.3.2)

Word	Data content	Type of data	Maximum time (seconds)	Bits used	Range of values	Bit numbers
Approach azimuth map/CRC word						
B1	PREAMBLE	digital	2.5	12		I_1 to I_{12}
	Address			8		I_{13} to I_{20}
	Number of approach azimuth procedure descriptors			4	0 to 15	I_{21} to I_{24}
	Last approach azimuth database word			6	see Note 2	I_{25} to I_{30}
	Approach azimuth CRC code			32	see Note 3	I_{31} to I_{62}
	Word B42 transmitted			1	see Note 4	I_{63}
	Word A4 transmitted			1	see Note 4	I_{64}
	Word B43 transmitted			1	see Note 4	I_{65}

Word	Data content	Type of data	Maximum time (seconds)	Bits used	Range of values	Bit numbers
	Spare			4	see Note 12	I_{66} to I_{69}
	PARITY			7	see Note 13	I_{70} to I_{76}
Procedure descriptor words						
B2 to B(M+1) (approach azimuth database) (see Note 1) B(b) to B(b+N–1) (back azimuth database)						
	PREAMBLE	digital	2.5	12		I_1 to I_{12}
	Address			8		I_{13} to I_{20}
	Basic indicator			25	see Note 5	I_{21} to I_{45}
	Validity indicator			4	1 to 9 (see Note 14)	I_{46} to I_{49}
	Route indicator			5	see Note 5	I_{50} to I_{54}
	Runway number			6	0 to 36 (see Note 15)	I_{55} to I_{60}
	Runway letter			2	see Note 6	I_{61} to I_{62}
	Procedure type			1	see Note 7	I_{63}
	First waypoint index			6	0 to 63 (see Notes 8, 9)	I_{64} to I_{69}
	PARITY			7	see Note 13	I_{70} to I_{76}
Waypoint data words (see Table A-16)						
B(M+2) to B(a) (approach azimuth database) (see Notes 1 and 11) B(b+N) to B(38) (back azimuth database)						
	PREAMBLE	digital	2.5	12		I_1 to I_{12}
	Address			8		I_{13} to I_{20}
	Waypoint definition data items			49	see Notes 10, 11	I_{21} to I_{69}
	PARITY			7	see Note 13	I_{70} to I_{76}
Back azimuth map/CRC word (see Notes 1 and 11)						
B39	PREAMBLE	digital	2.5	12		I_1 to I_{12}
	Address			8		I_{13} to I_{20}
	Number of back azimuth procedure descriptors			4	0 to 15	I_{21} to I_{24}
	First back azimuth database word			6	see Note 2	I_{25} to I_{30}
	Back azimuth CRC code			32	see Note 3	I_{31} to I_{62}
	Word B43 transmitted			1	see Note 4	I_{63}
	Spare			5	see Note 12	I_{64} to I_{68}
	Back azimuth map/CRC indicator			1	see Note 11	I_{69}
	PARITY			7	see Note 13	I_{70} to I_{76}

NOTES.—

1. Variables used in word numbers correspond to those used in Table A-14.
2. This field is coded in accordance with Table A-9, using bits I_{13} through I_{18}. In this table, bit I_{25} carries the information of bit I_{13} from Table A-9 and is transmitted first.
3. The CRC code contains the remainder, R(x), of the modulo 2 division of two polynomials:

$$\left[\frac{x^{32}M(x)}{G(x)}\right]_{\text{mod } 2} = Q(x) + \frac{R(x)}{G(x)}$$

M(x) is the information field, which consists of the approach azimuth or back azimuth database defined below, excluding the preambles, addresses, parity bits, and CRC code bits. For auxiliary data words these are bits I_{21} to I_{69}, and for basic data words bits I_{13} to I_{30}. The database consists of the following data words in the order listed:

Approach azimuth database:	*Back azimuth database:*
B1 (bits I_{21} to I_{30}, I_{63} to I_{69})	B(b) to B38
B2 to B(a)	B39 (bits I_{21} to I_{30}, I_{63} to I_{69})
B40, B41	B40, B41, A3
A1 or B42, A2, A3	A4 or B43 (if transmitted)
A4 or B43 (if transmitted)	Basic data word 6
Basic data word 6	

M(x) is multiplied by x^{32}, which appends 32 zero bits to the end of the dividend.
G(x) is the generator polynomial, defined as follows:
$G(x) = x^{32} + x^{31} + x^{14} + x^{13} + x^9 + x^8 + x^4 + x^3 + x + 1$
Q(x) is the quotient of the division.
The CRC code, R(x), is transmitted with the coefficient of x^{31} as bit I_{31} and the coefficient of x^0 as bit I_{62}.

4. The convention for coding is as follows:
   0 = no
   1 = yes
5. Alpha characters are coded as defined in 3.11.4.8.3 for data words B1 through B39.
6. The convention for coding is as follows:
   0 = no letter
   1 = R (right)
   2 = C (centre)
   3 = L (left)
7. The convention for coding is as follows:
   0 = approach procedure
   1 = departure procedure
8. Waypoint index numbers are assigned by sequentially numbering all waypoints in the approach azimuth or back azimuth database. If a waypoint at the primary runway threshold is coded using only a threshold crossing height, it is omitted from the waypoint index sequence.
9. A value of zero in this field indicates that the procedure is a computed centre line procedure based on data contained in auxiliary data words A1 (or B42), A2, A3 and A4 (or B43).
10. Waypoint definitions are of variable length and are coded sequentially without conforming to word boundaries. Spare bits are not permitted between waypoint definitions. Any spare bits at the end of the last waypoint data word are set to zero. Waypoint definitions for an approach procedure are coded in the order that the aircraft flies the procedure. Waypoint definitions for a missed approach or departure are coded in the reverse order. Missed approach or departure waypoints which are not shared with approach waypoints are coded after the last approach waypoint in the database.
11. A facility without a back azimuth data base may employ auxiliary word B39 as a waypoint data word for the approach azimuth database. Bit I_{69} of word B39 is used to indicate the application of this word. The convention for coding is as follows:
    0 = word B39 is a waypoint data word
    1 = word B39 is the back azimuth map/CRC word
12. All spare bits are set to ZERO.
13. Parity bits I_{70} to I_{76} are chosen to satisfy the equations given in Note 1 of Table A-12.
14. The coded value 0000 is not allowed.
15. Runway number designation 0 is for heliport operations.

Table A-16. Waypoint definition data items
(see 3.11.4.8.3.2)

Data content	Bits used	Range of values	Least significant bit
X coordinate	15	±41 940 m (see Notes 1, 2)	2.56 m
Y coordinate follows	1	See Note 3	
Y coordinate	15	±41 940 m (see Notes 1, 2)	2.56 m
Z coordinate follows	1	See Note 3	
Z coordinate	13	–100 to +8 091 m (see Notes 1, 4)	1 m
Next segment/field identifier	3	See Note 5	
Threshold waypoint height	6	0 to 31.5 m (see Note 5)	0.5 m
Virtual azimuth to waypoint distance	6	0 to 6 300 m (see Note 5)	100 m
Next waypoint index	6	See Notes 5, 6	
Missed approach index	6	See Notes 5, 6	

NOTES.—

1. The origin of the coordinate system is the MLS datum point. The X-axis is horizontal, and lies in the vertical plane containing the runway centre line, with a positive number representing a location toward the approach reference datum. The Y-axis is horizontal and perpendicular to the X-axis, with a positive number representing a location to the left of centre line as viewed from the MLS datum point looking toward the approach reference datum. The Z-axis is vertical, with a positive number representing a location above the MLS datum point. Earth curvature is not considered when determining waypoint coordinate values.
2. The convention for coding is as follows:
   Most significant bit is the sign bit:
   0 = positive
   1 = negative
   The other bits represent the absolute value.
3. The convention for coding is as follows:
   0 = no
   1 = yes
   The "Y coordinate follows" bit is set to ZERO (no) to indicate that the Y coordinate for the waypoint is zero. In this case, the Y coordinate field is not used. The "Z coordinate follows" bit is set to ZERO (no) to indicate either that the waypoint is two-dimensional or that it lies on a constant gradient between two waypoints for which the Z coordinate is transmitted. In either of these two cases, the Z coordinate field is not used.
4. This field is coded as an unsigned value with an offset of –100 m. A value of zero in this field would therefore represent a Z coordinate of –100 m.
5. Data fields which follow the next segment/field identifier are transmitted only for certain cases. The coding of the next segment/field identifier and use of subsequent data fields are defined in Table A-17.
6. Waypoint index numbers are assigned by sequentially numbering all waypoints in the approach azimuth or back azimuth database. If a waypoint at the primary runway threshold is coded using only a threshold crossing height, it is omitted from the waypoint index sequence. The next waypoint index field always refers to an index number lower than that of the current waypoint. The missed approach index field always refers to an index number higher than that of the current waypoint.

Table A-17. Next segment/field identifiers
(see 3.11.4.8.3.2)

Application				Next segment/ field identifier	Data field(s) to follow identifier		
Next waypoint location	Next waypoint shared (Note 1)	Linked to missed approach	Segment type		Approach procedure	Missed approach procedure	Departure procedure
Any	No	No	Straight	0	Next waypoint X coordinate		
			Curved	1			
	Yes		Straight	2	1. Next waypoint index 2. Next procedure first waypoint X coordinate		
			Curved	3			
Primary runway threshold	No	No	Straight	4	1. Threshold waypoint height 2. Next procedure first waypoint X coordinate	Next procedure first waypoint X coordinate	
		Yes		5	1. Threshold waypoint height 2. Missed approach index 3. Next procedure first waypoint X coordinate	Not allowed (see Note 3)	
None		No	None (see Note 2)	6	1. Virtual azimuth to waypoint distance 2. Next procedure first waypoint X coordinate	Next procedure first waypoint X coordinate	
		Yes	Straight to first flown missed approach waypoint	7	1.Virtual azimuth to waypoint distance 2. Missed approach index 3. Next procedure first waypoint X coordinate	Not allowed (see Note 3)	

NOTES.—

1. A shared waypoint is a waypoint that is identified in the current procedure by waypoint index number only. The waypoint coordinates are explicitly defined as part of another procedure.
2. Beyond this waypoint, guidance information is provided relative to the straight line extended from the current waypoint, tangent to the path entering the waypoint. In the case of a missed approach procedure, this line intersects the last approach waypoint.
3. Next segment/field identifier values 5 and 7 are reserved for use in approach procedures only. Missed approach and departure procedures may share approach waypoints which use these values, ignoring the data fields for threshold waypoint height, virtual azimuth to threshold distance and missed approach index.

APPENDIX B. TECHNICAL SPECIFICATIONS FOR THE GLOBAL NAVIGATION SATELLITE SYSTEM (GNSS)

1. DEFINITIONS

GBAS/E. A ground-based augmentation system transmitting an elliptically-polarized VHF data broadcast.

GBAS/H. A ground-based augmentation system transmitting a horizontally-polarized VHF data broadcast.

Receiver. A subsystem that receives GNSS signals and includes one or more sensors.

Reserved (bits/words/fields). Bits/words/fields that are not allocated, but which are reserved for a particular GNSS application.

S_{max}. Maximum desired VHF data broadcast signal power at the VHF data broadcast receiver input. This power at the receiver input is computed from the maximum RF field strength defined in Chapter 3, 3.7.3.5.4.4 for the desired VHF data broadcast signal as received by an ideal isotropic antenna minus the minimum aircraft implementation loss. It is used to determine the VHF data broadcast interference immunity to adjacent channel signals (3.6.8.2.2.6) and to signals from sources outside the 108.000 – 117.975 MHz band (3.6.8.2.2.8).

Spare (bits/words/fields). Bits/words/fields that are not allocated or reserved, and which are available for future allocation.

Note.— All spare bits are set to zero.

2. GENERAL

Note.— The following technical specifications supplement the provisions of Chapter 3, 3.7.

3. GNSS ELEMENTS

3.1 Core constellations

3.1.1 GLOBAL POSITIONING SYSTEM (GPS)
STANDARD POSITIONING SERVICE (SPS) (L1 AND L5)

3.1.1.1 *NON-AIRCRAFT ELEMENTS*

3.1.1.1.1 L1 coarse acquisition (c/a) signal radio frequency (rf) characteristics

3.1.1.1.1.1 *Carrier phase noise*. The carrier phase noise spectral density of the unmodulated L1 carrier shall be such that a phase locked loop of 10 Hz one-sided noise bandwidth is able to track the carrier to an accuracy of 0.1 radian (1 sigma).

3.1.1.1.1.2 *Spurious emissions*. In-band spurious emissions shall be at least 40 dB below the unmodulated L1 carrier over the allocated channel bandwidth.

3.1.1.1.1.3 *Correlation loss*. The loss in the recovered signal power due to imperfections in the L1 C/A signal modulation and waveform distortion shall not exceed 0.6 dB for all GPS-II satellite generations and 0.3 dB for all GPS-III satellite generations.

Note.— The loss in signal power is the difference between the broadcast power in an allocated bandwidth and the signal power recovered by a noise-free, loss-free receiver with 1-chip correlator spacing and the same bandwidth.

3.1.1.1.1.4 *L1 C/A code generation and timing.* Each C/A code pattern $G_i(t)$ shall be formed by the Modulo-2 sum of two 1 023-bit linear patterns, G1 and $G2_i$. The $G2_i$ sequence shall be formed by effectively delaying the G2 sequence by an integer number of chips. The G1 and G2 sequences shall be generated by 10-stage shift registers having the following polynomials as referred to in the shift register input:

a) G1: $X^{10} + X^3 + 1$; and

b) G2: $X^{10} + X^9 + X^8 + X^6 + X^3 + X^2 + 1$.

The initialization vector for the G1 and G2 sequences shall be "1111111111". The G1 and G2 registers shall be clocked at a 1.023 MHz rate. Timing relationships related to the C/A code shall be as shown in Figure B-1.[1]

Note.— Additional information on code phase assignments is given in IS-GPS-200K.

3.1.1.1.2 *L1 data structure.* The legacy navigation (LNAV) message shall be formatted as shown in Figure B-2. Each page, as shown in Figure B-6, shall utilize a basic format of a 1 500-bit-long frame with up to 5 subframes, each of 300 bits in length. All words shall be transmitted most significant bit (MSB) first.

Note.— The bit allocations depicted for subframes 4 and 5 in Figure B-6 apply only to satellites broadcasting PRN codes 1 – 32. See IS-GPS-200K for the bit allocations of subframes 4 and 5 for satellites broadcasting PRN codes 33 – 63.

3.1.1.1.2.1 *Subframe structure*. Each subframe and/or page of a subframe shall start with a telemetry (TLM) word followed by a handover word (HOW). The HOW shall be followed by 8 data words. Each word in each frame shall contain 6 parity bits. The TLM word and HOW formats shall be as shown in Figures B-3 and B-4, respectively.

3.1.1.1.2.2 *End/start of week*. At the end/start of week:

a) the cyclic paging of subframes 1 through 5 shall restart with subframe 1 regardless of which subframe was last transmitted prior to the end/start of week; and

b) the cycling of 25 pages of subframes 4 and 5 shall restart with page 1 of each of the subframes, regardless of which page was transmitted prior to the end/start of week. All upload and page cutovers shall occur on frame boundaries (i.e. Modulo 30 seconds relative to the end/start of week).

Note.— New data in subframes 4 and 5 may start to be transmitted with any of the 25 pages of these subframes.

3.1.1.1.2.3 *Data parity*. Words 1 through 10 of subframes 1 through 5 shall each contain 6 parity bits as their least significant bits (LSBs). In addition, two non-information bearing bits shall be provided as bits 23 and 24 of words 2 and 10 for parity computation purposes.

[1] All figures are located at the end of the appendix.

3.1.1.1.2.4 *Telemetry (TLM) word*. Each TLM word shall be 30 bits long, occur every 6 seconds in the data frame and be the first word in each subframe. The TLM format shall be as shown in Figure B-3. Each TLM word shall begin with a preamble, followed by 16 reserved bits and 6 parity bits.

3.1.1.1.2.5 *Handover word (HOW).* The HOW shall be 30 bits long and shall be the second word in each subframe/page, immediately following the TLM word. A HOW shall occur every 6 seconds in the data frame. The HOW format and content shall be as shown in Figure B-4. The full time-of-week (TOW) count shall consist of the 19 LSBs of the 29-bit Z-count (3.1.1.1.2.6). The HOW shall begin with the 17 MSBs of the TOW count. These 17 bits shall correspond to the TOW count at the 1.5-second epoch that occurs at the start (leading edge) of the next following subframe.

3.1.1.1.2.5.1 *Bit 18*. On satellites designed by configuration code 001, bit 18 shall be an "alert" flag. When this flag is raised (bit 18 is a "1"), it shall indicate to the user that the satellite user range accuracy (URA) may be worse than indicated in subframe 1 and that use of the satellite is at the user's risk.

3.1.1.1.2.5.2 *Bit 19*. Bit 19 shall be reserved.

3.1.1.1.2.5.3 *Bits 20, 21 and 22*. Bits 20, 21 and 22 of the HOW shall provide the identification (ID) of the subframe in which that particular HOW is the second word. The ID code shall be as defined below:

ID	*Code*
1	001
2	010
3	011
4	100
5	101

3.1.1.1.2.6 *Satellite Z-count*. Each satellite shall internally derive a 1.5-second epoch that shall contain a convenient unit for precisely counting and communicating time. Time stated in this manner shall be referred to as a Z-count. The Z-count shall be provided to the user as a 29-bit binary number consisting of two parts as follows.

3.1.1.1.2.6.1 *Time-of-week (TOW) count*. The binary number represented by the 19 LSBs of the Z-count shall be referred to as the TOW count and is defined as being equal to the number of 1.5-second epochs that have occurred since the transition from the previous week. The count shall be short-cycled such that the range of the TOW count is from 0 to 403 199 1.5 second epochs (equalling one week) and shall be reset to zero at the end of each week. The TOW count's zero state shall be the 1.5-second epoch that is coincident with the start of the present week. A truncated version of the TOW count, consisting of its 17 MSBs, shall be contained in the HOW of the L1 downlink data stream. The relationship between the actual TOW count and its truncated HOW version shall be as indicated in Figure B-5.

Note.— The above-mentioned epoch occurs at (approximately) midnight Saturday night/Sunday morning, where midnight is defined as 0000 hours on the UTC scale which is nominally referenced to the Greenwich Meridian.

3.1.1.1.2.6.2 *Week count*. The 10 MSBs of the Z-count shall be a binary representation of the sequential number assigned to the present GPS week (Modulo 1024). The range of this count shall be from 0 to 1 023. Its zero state shall be that week which starts with the 1.5-second epoch occurring at (approximately) the UTC zero time point (3.1.4). At the expiration of GPS week number 1 023, the GPS week number shall roll over to zero. The previous 1 024 weeks in conversions from GPS time to a calendar date shall be accounted for by the user.

3.1.1.1.3 *L1 DATA CONTENT*

3.1.1.1.3.1 *Subframe 1 — satellite clock and health data*. The content of words 3 through 10 of subframe 1 shall contain the clock parameters and other data as indicated in Table B-1. The parameters in a data set shall be valid during the interval of time in which they are transmitted and shall remain valid for an additional period of time after transmission of the next data set has started.

3.1.1.1.3.1.1 *Week number*. The 10 MSBs of word 3 shall contain the 10 MSBs of the 29-bit Z-count and shall represent the number of the current GPS week at the start of the data set transmission interval with all zeros indicating week "zero." The GPS week number shall increment at each end/start of week epoch.

3.1.1.1.3.1.2 *User range accuracy (URA)*. Bits 13 through 16 of word 3 provide a URA index, which prescribes the predicted satellite URA as shown in Table B-2. The integrity assured URA (IAURA) shall be the upper bound URA value corresponding to the URA index, as shown in the last column of Table B-2.

Note 1.— The URA does not include error estimates due to inaccuracies of the single-frequency ionospheric delay model.

Note 2.— The URA is a statistical indicator of the contribution of the apparent clock and ephemeris prediction accuracies to the ranging accuracies obtainable with a specific satellite based on historical data.

Note 3.— The nominal URA value for each URA index is also shown in Table B-2. The nominal URA is suitable for use as a prediction of the RMS signal-in-space pseudo-range errors for accuracy-related purposes.

Table B-1. Subframe 1 parameters

Parameter	*Number of bits***	*Scale factor (LSB)*	*Effective range****	*Units*
Week number	10	1		weeks
Satellite accuracy	4			
Satellite health	6	1		discretes
T_{GD}	8*	2^{-31}		seconds
IODC	10			
t_{oc}	16	2^{4}	604 784	seconds
a_{f2}	8*	2^{-55}		seconds/second^2
a_{f1}	16*	2^{-43}		seconds/second
a_{f0}	22*	2^{-31}		seconds

* Parameters so indicated are two's complement, with the sign bit (+ or –) occupying the MSB.
** See Figure B-6 for complete bit allocation.
*** Unless otherwise indicated in this column, effective range is the maximum range.

Table B-2. User range accuracy

URA index	*URA (metres)*	*Nominal URA*	*Corresponding IAURA*
0	0.00 < URA ≤ 2.40	2 m	2.40 m
1	2.40 < URA ≤ 3.40	2.8 m	3.40 m
2	3.40 < URA ≤ 4.85	4 m	4.85 m
3	4.85 < URA ≤ 6.85	5.7 m	6.85 m
4	6.85 < URA ≤ 9.65	8 m	9.65 m
5	9.65 < URA ≤ 13.65	11.3 m	13.65 m
6	13.65 < URA ≤ 24.00	16 m	24.00 m
7	24.00 < URA ≤ 48.00	32 m	48.00 m
8	48.00 < URA ≤ 96.00	64 m	96.00 m
9	96.00 < URA ≤ 192.00	128 m	192.00 m
10	192.00 < URA ≤ 384.00	256 m	384.00 m
11	384.00 < URA ≤ 768.00	512 m	768.00 m
12	768.00 < URA ≤ 1 536.00	1 024 m	1 536.00 m
13	1 536.00 < URA ≤ 3 072.00	2 048 m	3 072.00 m
14	3 072.00 < URA ≤ 6 144.00	4 096 m	6 144.00 m
15	6 144.00 < URA (or no accuracy prediction is available – SPS users are advised to use the SV at their own risk)	No accuracy prediction is available – SPS users are advised to use the SV at their own risk	N/A

3.1.1.1.3.1.3 *Health*. The transmitting satellite 6-bit health indication shall be provided by bits 17 through 22 of word 3. The MSB shall indicate a summary of the health of the navigation data, where:

a) 0 = all navigation data are valid; and

b) 1 = some of the navigation data are not valid.

The 5 LSBs shall indicate the health of the signal components in accordance with Table B-3. The health indication shall be provided relative to the capabilities of each satellite as designated by the configuration code provided in page 25 of subframe 4. Any satellite that does not have a certain capability shall be indicated as “healthy” if the lack of this capability is inherent in its design or it has been configured into a mode which is normal from a receiver standpoint and does not require that capability. Additional health data shall be given in subframes 4 and 5.

Note.— The data given in subframe 1 may differ from that shown in subframes 4 and/or 5 of other satellites since the latter may be updated at a different time.

Table B-3. Codes for health of satellite signal components

MSB				*LSB*	*Indication*
0	0	0	0	0	ALL SIGNALS OK
1	1	1	0	0	SATELLITE IS TEMPORARILY OUT — do not use this satellite during current pass
1	1	1	0	1	SATELLITE WILL BE TEMPORARILY OUT — use with caution
1	1	1	1	0	ONE OR MORE SIGNALS ARE DEFORMED*, HOWEVER THE RELEVANT URA PARAMETERS ARE VALID
1	1	1	1	1	MULTIPLE ANOMALIES PRESENT (other than those anomalies or conditions that would result in either of the two satellite temporary outages as codified above.)
All other combinations					SATELLITE EXPERIENCING CODE MODULATION AND/OR SIGNAL POWER LEVEL TRANSMISSION PROBLEMS. The user may not be able to acquire the satellite or may experience intermittent tracking problems if satellite is acquired.

*Deformed means one or more signals do not meet the requirements in IS-GPS-200K, Section 3.

3.1.1.1.3.1.4 *Issue of data, clock (IODC)*. Bits 23 and 24 of word 3 in subframe 1 shall be the 2 MSBs of the 10-bit IODC term. Bits 1 through 8 of word 8 in subframe 1 shall contain the 8 LSBs of the IODC. The IODC shall indicate the issue number of data set. The transmitted IODC shall be different from any value transmitted by the satellite during the preceding 6 hours.

Note.— The relationship between the IODC and the Issue of Data, Ephemeris (IODE) terms is defined in 3.1.1.1.3.2.2.

3.1.1.1.3.1.5 *Estimated group delay differential*. Bits 17 through 24 of word 7 shall contain the correction term, T_{GD}, to account for the effect of satellite group delay differential.

Note.— T_{GD} does not include any C/A to P(Y) code relative group delay error.

3.1.1.1.3.1.6 *Satellite clock correction parameters*. Bits 9 through 24 of word 8, bits 1 through 24 of word 9, and bits 1 through 22 of word 10 shall contain the parameters needed by the users for apparent satellite clock correction (t_{oc}, a_{f2}, a_{f1} and a_{f0}).

3.1.1.1.3.1.7 *Reserved data fields*. Reserved data fields shall be as indicated in Table B-4. All reserved data fields shall support valid parity within their respective words.

3.1.1.1.3.2 *Subframes 2 and 3 — satellite ephemeris data*. Subframes 2 and 3 shall contain the ephemeris representation of the transmitting satellite.

3.1.1.1.3.2.1 *Ephemeris parameters*. The ephemeris parameters shall be as indicated in Table B-5. For each parameter in subframe 2 and 3, the number of bits, the scale factor of the LSB, the range, and the units shall be as specified in Table B-6.

3.1.1.1.3.2.2 *Issue of data, ephemeris (IODE)*. The IODE shall be an 8-bit number equal to the 8 LSBs of the 10-bit IODC of the same data set. The IODE shall be provided in both subframes 2 and 3 for the purpose of comparison with the 8 LSBs of the IODC term in subframe 1. Whenever these three terms do not match, as a result of a data set cutover, new data shall be collected. The transmitted IODE shall be different from any value transmitted by the satellite during the preceding six hours (*Note 1*). Any change in the subframe 2 and 3 data shall be accomplished in concert with a change in both IODE words. Change to new data sets shall occur only on hour boundaries except for the first data set of a new upload. Additionally, the t_{oe} value, for at least the first data set transmitted by a satellite after an upload, shall have a small negative offset relative to the nominal location on an hour boundary (midpoint of the curve fit interval) (*Note 2*).

Table B-4. Subframe 1 reserved data fields

Word	*Bit*
3	11 – 12
4	1 – 24
5	1 – 24
6	1 – 24
7	1 – 16

Table B-5. Ephemeris data

M_0	Mean anomaly at reference time
Δn	Mean motion difference from computed value
e	Eccentricity
$\sqrt{A}$	Square root of the semi-major axis
$OMEGA_0$	Longitude of ascending node of orbit plane at weekly epoch
i_0	Inclination angle at reference time
ω	Argument of perigee
OMEGADOT	Rate of right ascension
iDOT	Rate of inclination angle
C_{uc}	Amplitude of the cosine harmonic correction term to the argument of latitude
C_{us}	Amplitude of the sine harmonic correction term to the argument of latitude
C_{rc}	Amplitude of the cosine harmonic correction term to the orbit radius
C_{rs}	Amplitude of the sine harmonic correction term to the orbit radius
C_{ic}	Amplitude of the cosine harmonic correction term to the angle of inclination
C_{is}	Amplitude of the sine harmonic correction term to the angle of inclination
t_{oe}	Reference time, ephemeris
IODE	Issue of data, ephemeris

Table B-6. Ephemeris parameters

Parameter	*Number of bits***	*Scale factor (LSB)*	*Effective range****	*Units*
IODE	8			
C_{rs}	16*	2^{-5}		metres
Δn	16*	2^{-43}		semi-circles/second
M_0	32*	2^{-31}		semi-circles
C_{uc}	16*	2^{-29}		radians
e	32	2^{-33}	0.03	dimensionless
C_{us}	16*	2^{-29}		radians
$\sqrt{A}$	32	2^{-19}	2 530 to 8 192	$\text{metres}^{1/2}$
t_{oe}	16	2^{4}	604 784	seconds
C_{ic}	16*	2^{-29}		radians
$OMEGA_0$	32*	2^{-31}		semi-circles
C_{is}	16*	2^{-29}		radians
i_0	32*	2^{-31}		semi-circles
C_{rc}	16*	2^{-5}		metres
ω	32*	2^{-31}		semi-circles
OMEGADOT	24*	2^{-43}	-6.33×10^{-7} to 0	semi-circles/second
iDOT	14*	2^{-43}		semi-circles/second

* Parameters so indicated are two's complement, with the sign bit (+ or –) occupying the MSB.
** See Figure B-6 for complete bit allocation in subframe.
*** Unless otherwise indicated in this column, effective range is the maximum range attainable with the indicated bit allocation and scale factor.

Note 1.— The IODE/IODC terms provide the receiver with a means for detecting any changes in the ephemeris/clock representation parameters.

Note 2.— The first data set may change (3.1.1.1.2.2) at any time during the hour and therefore may be transmitted by the satellite for less than 1 hour.

3.1.1.1.3.2.3 *Curve fit intervals*. Bit 17 in word 10 of subframe 2 shall be a "fit interval" flag which indicates the curve-fit interval used in determining the ephemeris parameters, as follows:

0 = 4 hours,
1 = greater than 4 hours.

A fit interval flag of zero (0) shall indicate the satellite is undergoing normal operations. A fit interval flag of one (1) shall indicate the satellite is undergoing short- or long-term extended operations.

3.1.1.1.3.3 *Subframes 4 and 5 — support data*. Both subframes 4 and 5 shall be subcommutated 25 times each. With the possible exception of "reserved" pages and explicit repeats, each page shall contain different data in words 3 through 10. Subframes 4 and 5 shall contain the data listed in Table B-7.

Note.— Subframes 4 and 5 from satellites broadcasting PRN codes 1 – 32 contain almanac and health data for 32 satellites. Subframes 4 and 5 from satellites broadcasting PRN codes 33 – 63 contain almanac and health data for only 31 satellites. See IS-GPS-200K for full details on the content and bit allocations of the data in subframes 4 and 5.

Table B-7. Subframes 4 and 5 data

Subframe	*Page(s)*	*Data*
4	1, 6, 11, 16 and 21	Reserved
	2, 3, 4, 5, 7, 8, 9 and 10*	Almanac data
	12, 19, 20, 22, 23 and 24	Reserved
	13	NMCT**
	14 and 15	Reserved for system use
	17	Special messages**
	18	Ionospheric and UTC data
	25	A-S flags/SV configurations and SV health
5	1 through 24	Almanac data
	25	SV health data

* Page 10 of subframe 4 is only sent from satellites broadcasting PRN codes 1 – 32 (and will contain almanac data for PRN 32); it is not used by satellites broadcasting PRN codes 33 – 63.
** Page not intended for aviation use.

3.1.1.1.4 *L5 SIGNAL RADIO FREQUENCY (RF) CHARACTERISTICS*

3.1.1.1.4.1 *Carrier phase noise*. The carrier phase noise spectral density of the unmodulated L5 carrier shall be such that a phase locked loop of 10 Hz one-sided noise bandwidth can track the carrier to an accuracy of 0.1 radians RMS.

3.1.1.1.4.2 *Spurious emissions*. In-band spurious emissions shall be at least 40 dB below the unmodulated L5 carrier over the allocated channel bandwidth.

3.1.1.1.4.3 *Correlation loss*. The loss in the recovered signal power due to imperfections in the L5 signal modulation and waveform distortion shall not exceed 0.6 dB.

Note.— The loss in signal power is the difference between the broadcast power in an allocated bandwidth and the signal power recovered by a noise-free, loss-free receiver with 1-chip correlator spacing and the same bandwidth.

3.1.1.1.4.4 *L5 carrier components*. L5 shall have two carrier components modulated by separate bit trains: the I5-code and the Q5-code (see Table B-8).

3.1.1.1.4.4.1 The I5 and Q5 carriers shall be in phase quadrature (within ±100 milliradians) and the Q5 carrier shall be lagging the I5 carrier by 90 degrees.

Table B-8. Composite L5 transmitted signal phase**

*Nominal composite L5 signal phase**	*Code state*	
	I5	Q5
0°	0	0
-90°	1	0
+90°	0	1
180°	1	1

* Relative to 0, 0 code state with positive angles leading and negative angles lagging.
** Based on the composite of two L5 carrier components at the same power.

3.1.1.1.4.5 *Code generation*. The I5 and Q5 code patterns $I5_i(t)$ and $Q5_i(t)$ shall each be formed by the Modulo-2 sum of two extended bit patterns clocked at a 10.23 MHz rate, XA(t) and $XBI_i(nI_i, t)$ or XA(t) and $XBQ_i(nQ_i, t)$, where nI_i and nQ_i are the initial states of XBI_i and XBQ_i for satellite i.

3.1.1.1.4.5.1 The XA code shall be a code of length 8 190 with initial condition of all "ones" that is short-cycled 1 chip before its natural ending and restarted to run over a period of 1 millisecond (synchronized with the L1 frequency C/A code) for a total of 10 230 chips.

3.1.1.1.4.5.2 The XBI_i and XBQ_i codes shall be codes of length 8 191 with initial conditions that are specified in IS-GPS-705F, Tables 3-Ia and Ib. The XBI_i and XBQ_i codes shall not be short-cycled and shall be restarted to run over a period of 1 millisecond for a total of 10 230 chips.

3.1.1.1.4.5.3 The generating polynomials for the XA and XBI_i and XBQ_i codes shall be:

a) XA: $X^{13} + X^{12} + X^{10} + X^9 + 1$; and

b) XBI_i and XBQ_i: $X^{13} + X^{12} + X^8 + X^7 + X^6 + X^4 + X^3 + X + 1$.

Note.— Additional details on code phase assignments are specified in the GPS Interface Specification, IS-GPS-705F.

3.1.1.1.4.6 *Navigation data modulation.* The L5 navigation data (CNAV) bit train shall be encoded at a rate of 2 symbols per bit using a convolution code with a constraint length of 7 to yield 100 symbols per second (sps). The 100 sps symbols shall then be modulated (Modulo-2 addition) with the 10-bit Neuman-Hofman code "0000110101" clocked at 1 kHz. The resulting symbol sequence shall be Modulo-2 added with the I5 PRN code and used to modulate the L5 in-phase carrier.

3.1.1.1.4.7 *Signal timing*. The XA code shall be synchronized with the L1 frequency C/A code. The XBI_i and XBQ_i codes shall be synchronized with the XA code.

3.1.1.1.4.8 *Group delay differential.* The absolute value of the mean differential delay between the radiated L1 and L5 signals shall not exceed 30.0 nanoseconds. The total variation about the mean (random plus non-random variations) shall not exceed 3.0 nanoseconds (95 per cent probability).

Note.— Inter-signal corrections (ISCs) are provided in the navigation data, to correct for the bias component of the differential delay.

3.1.1.1.5 *L5 DATA STRUCTURE*

3.1.1.1.5.1 *Forward error correction*. The L5 CNAV bit train shall be rate 1/2 convolution encoded with a forward error correction (FEC) code of constraint length 7.

3.1.1.1.5.2 *Navigation data structure*. The L5 CNAV data shall be provided in a set of six-second 300-bit long messages.

3.1.1.1.5.2.1 Each message shall contain a cyclic redundancy check (CRC) parity block of 24 bits protecting the entire 300-bit message.

3.1.1.1.5.2.2 Each message shall be composed of the following ordered fields: an 8-bit preamble (“10001011”), the 6-bit PRN number of the transmitting satellite, a 6-bit message type ID (range 0 to 63), the 17-bit message time-of-week (TOW) count, a 1-bit alert flag (bit 38), the data field (238 bits), and the 24-bit CRC parity block.

3.1.1.1.5.2.3 The TOW count multiplied by 6 shall provide the satellite time in seconds at the start of the next 6-second message.

3.1.1.1.5.2.4 Bit 38 shall be an “alert flag” where the value “1” indicates that the signal URA components may be worse than indicated in the associated message types and that use of the signal is at the user’s risk.

3.1.1.1.6 *L5 (CNAV) DATA CONTENT*

3.1.1.1.6.1 *CNAV message types*. The CNAV data broadcasted on L5 shall contain the message types listed in Table B-9.

Note.—See IS-GPS-705F for details on the content and application of the data contained in each message type.

Table B-9. CNAV message types

Message type	*Content*
0	Default message (empty)
10	Ephemeris, accuracy, health parameters
11	Ephemeris, accuracy, health parameters
30	SV Clock, accuracy, ionosphere, group delay
31	SV Clock, accuracy, almanac
32	SV Clock, accuracy, earth orientation parameters
33	SV Clock, accuracy, UTC parameters
34	SV Clock, accuracy, differential correction parameters
35	SV Clock, accuracy, GPS/GNSS time offset
36	SV Clock, accuracy, text messages
37	SV Clock, accuracy, midi almanac

3.1.1.1.6.2 Message Type 10 shall contain the elevation-dependent (ED) component of the user range accuracy (URA_{ED}) index corresponding to the maximum elevation-dependent error expected for the current ephemeris curve fit for the worst-case location within the satellite footprint.

Note.— At the best location within the satellite footprint (i.e. nominally directly below the satellite along its nadir vector), the corresponding URA_{ED} is zero (see Table B-10).

3.1.1.1.6.3 Message Types 30 to 37 shall contain the non-elevation-dependent (NED) URA component indices: URA_{NED0} index, URA_{NED1} index, and URA_{NED2} index, respectively, for the transmitting satellite.

The URA_{NED0} value shall be related to the URA_{NED0} index according to Table B-11.

The URA_{NED1} value shall be related to the URA_{NED1} index as:

$$URA_{NED1} = \frac{1}{2^N}$$

where

N = 14 + URA_{NED1} index

The URA_{NED2} value shall be related to the URA_{NED2} index as:

$$URA_{NED2} = \frac{1}{2^N}$$

where

N = 28 + URA_{NED2} index

Note.— URA_{ED}, URA_{NED0}, URA_{NED1} and URA_{NED2} are used to compute the integrity assured URA (IAURA).

Table B-10. Elevation-dependent user range accuracy URA_{ED}

URA_{ED} index	*URA_{ED} (m)*
15	6 144.00 < URA_{ED} (accuracy prediction not available)
14	3 072.00 < URA_{ED} ≤ 6 144.00
13	1 536.00 < URA_{ED} ≤ 3 072.00
12	768.00 < URA_{ED} ≤ 1 536.00
11	384.00 < URA_{ED} ≤ 768.00
10	192.00 < URA_{ED} ≤ 384.00
9	96.00 < URA_{ED} ≤ 192.00
8	48.00 < URA_{ED} ≤ 96.00
7	24.00 < URA_{ED} ≤ 48.00
6	13.65 < URA_{ED} ≤ 24.00

URA_{ED} *index*	URA_{ED} *(m)*
5	$9.65 < URA_{ED} \leq 13.65$
4	$6.85 < URA_{ED} \leq 9.65$
3	$4.85 < URA_{ED} \leq 6.85$
2	$3.40 < URA_{ED} \leq 4.85$
1	$2.40 < URA_{ED} \leq 3.40$
0	$1.70 < URA_{ED} \leq 2.40$
− 1	$1.20 < URA_{ED} \leq 1.70$
− 2	$0.85 < URA_{ED} \leq 1.20$
− 3	$0.60 < URA_{ED} \leq 0.85$
− 4	$0.43 < URA_{ED} \leq 0.60$
− 5	$0.30 < URA_{ED} \leq 0.43$
− 6	$0.21 < URA_{ED} \leq 0.30$
− 7	$0.15 < URA_{ED} \leq 0.21$
− 8	$0.11 < URA_{ED} \leq 0.15$
− 9	$0.08 < URA_{ED} \leq 0.11$
− 10	$0.06 < URA_{ED} \leq 0.08$
− 11	$0.04 < URA_{ED} \leq 0.06$
− 12	$0.03 < URA_{ED} \leq 0.04$
− 13	$0.02 < URA_{ED} \leq 0.03$
− 14	$0.01 < URA_{ED} \leq 0.02$
− 15	$URA_{ED} \leq 0.01$
− 16	Accuracy prediction not available

Table B-11. Non-elevation-dependent user range accuracy URA_{NED0}

URA_{NED0} *index*	URA_{NED0} *(m)*
15	6 144.00 < URA_{NED0} (accuracy prediction not available)
14	3 072.00 < $URA_{NED0} \leq$ 6 144.00
13	1 536.00 < $URA_{NED0} \leq$ 3 072.00
12	768.00 < $URA_{NED0} \leq$ 1 536.00
11	384.00 < $URA_{NED0} \leq$ 768.00
10	192.00 < $URA_{NED0} \leq$ 384.00
9	96.00 < $URA_{NED0} \leq$ 192.00
8	48.00 < $URA_{NED0} \leq$ 96.00

URA_{NED0} index	*URA_{NED0} (m)*
7	$24.00 < URA_{NED0} \leq 48.00$
6	$13.65 < URA_{NED0} \leq 24.00$
5	$9.65 < URA_{NED0} \leq 13.65$
4	$6.85 < URA_{NED0} \leq 9.65$
3	$4.85 < URA_{NED0} \leq 6.85$
2	$3.40 < URA_{NED0} \leq 4.85$
1	$2.40 < URA_{NED0} \leq 3.40$
0	$1.70 < URA_{NED0} \leq 2.40$
− 1	$1.20 < URA_{NED0} \leq 1.70$
− 2	$0.85 < URA_{NED0} \leq 1.20$
− 3	$0.60 < URA_{NED0} \leq 0.85$
− 4	$0.43 < URA_{NED0} \leq 0.60$
− 5	$0.30 < URA_{NED0} \leq 0.43$
− 6	$0.21 < URA_{NED0} \leq 0.30$
− 7	$0.15 < URA_{NED0} \leq 0.21$
− 8	$0.11 < URA_{NED0} \leq 0.15$
− 9	$0.08 < URA_{NED0} \leq 0.11$
− 10	$0.06 < URA_{NED0} \leq 0.08$
− 11	$0.04 < URA_{NED0} \leq 0.06$
− 12	$0.03 < URA_{NED0} \leq 0.04$
− 13	$0.02 < URA_{NED0} \leq 0.03$
− 14	$0.01 < URA_{NED0} \leq 0.02$
− 15	$URA_{NED0} \leq 0.01$
− 16	Accuracy prediction not available

3.1.1.2 DEFINITIONS OF PROTOCOLS FOR DATA APPLICATION

Note.— This section defines the inter-relationships of the data broadcast message parameters. It provides definitions of parameters that are not transmitted, but are used by either or both non-aircraft and aircraft elements, and that define terms applied to determine the navigation solution and its integrity.

Table B-12. Parity encoding algorithms

D_1	=	$d_1 \oplus D^*_{30}$
D_2	=	$d_2 \oplus D^*_{30}$
D_3	=	$d_3 \oplus D^*_{30}$
•		•
•		•
•		•
•		•
D_{24}	=	$d_{24} \oplus D^*_{30}$
D_{25}	=	$D^*_{29} \oplus d_1 \oplus d_2 \oplus d_3 \oplus d_5 \oplus d_6 \oplus d_{10} \oplus d_{11} \oplus d_{12} \oplus d_{13} \oplus d_{14} \oplus d_{17} \oplus d_{18} \oplus d_{20} \oplus d_{23}$
D_{26}	=	$D^*_{30} \oplus d_2 \oplus d_3 \oplus d_4 \oplus d_6 \oplus d_7 \oplus d_{11} \oplus d_{12} \oplus d_{13} \oplus d_{14} \oplus d_{15} \oplus d_{18} \oplus d_{19} \oplus d_{21} \oplus d_{24}$
D_{27}	=	$D^*_{29} \oplus d_1 \oplus d_3 \oplus d_4 \oplus d_5 \oplus d_7 \oplus d_8 \oplus d_{12} \oplus d_{13} \oplus d_{14} \oplus d_{15} \oplus d_{16} \oplus d_{19} \oplus d_{20}$ ر d_{22}
D_{28}	=	$D^*_{30} \oplus d_2 \oplus d_4 \oplus d_5 \oplus d_6 \oplus d_8 \oplus d_9 \oplus d_{13} \oplus d_{14} \oplus d_{15} \oplus d_{16} \oplus d_{17} \oplus d_{20} \oplus d_{21} \oplus d_{23}$
D_{29}	=	$D^*_{30} \oplus d_1 \oplus d_3 \oplus d_5 \oplus d_6 \oplus d_7 \oplus d_9 \oplus d_{10} \oplus d_{14} \oplus d_{15} \oplus d_{16} \oplus d_{17} \oplus d_{18} \oplus d_{21} \oplus d_{22} \oplus d_{24}$
D_{30}	=	$D^*_{29} \oplus d_3 \oplus d_5 \oplus d_6 \oplus d_8 \oplus d_9 \oplus d_{10} \oplus d_{11} \oplus d_{13} \oplus d_{15} \oplus d_{19} \oplus d_{22} \oplus d_{23} \oplus d_{24}$

where:

D_1, D_2, D_3, ... D_{29}, D_{30} are the bits transmitted by the satellite;
D_{25}, ... D_{30} are the computed parity bits;
d_1, d_2, ... d_{24} are the source data bits;
$\oplus$ is the Modulo-2 or "Exclusive-Or" operation; and
* is used to identify the last two bits of the previous word of the subframe.

3.1.1.2.1 *GPS PROTOCOLS FOR SINGLE-FREQUENCY L1 USERS*

3.1.1.2.1.1 *Parity algorithm*. GPS parity algorithms are defined as indicated in Table B-12.

3.1.1.2.1.2 *Satellite clock correction parameters*. GPS system time t is defined as:

$$t = t_{sv} - (\Delta t_{sv})_{L1}$$

where

t = GPS system time (corrected for beginning and end-of-week crossovers);
t_{sv} = effective satellite PRN code phase time at transmission of the message;
$(\Delta t_{sv})_{L1}$ = the satellite PRN code phase offset for the L1 C/A signal;
$(\Delta t_{sv})_{L1} = \Delta t_{sv} - T_{GD}$

where

$\Delta t_{sv} = a_{f0} + a_{f1}(t - t_{oc}) + a_{f2}(t - t_{oc})^2 + \Delta t_r$;
T_{GD} is contained in subframe 1;
a_{f0}, a_{f1} and a_{f2} and t_{oc}, are contained in subframe 1; and
Δt_r = the relativistic correction term (seconds)
$\Delta t_r = Fe \sqrt{A} \sin E_k$

where

e and A are contained in subframes 2 and 3;
E_k is defined in Table B-13; and

$$F = \frac{-2(\mu)^{1/2}}{c^2} = -4.442807633(10)^{-10} s/m^{1/2}$$

where

μ = WGS-84 universal gravitational parameter (3.986005×10^{14} m^3/s^2)
c = the speed of light in a vacuum (2.99792458×10^8 m/s)

Note.— The value of t is intended to account for the beginning or end-of-week crossovers. That is, if the quantity $t-t_{oc}$ is greater than 302 400 seconds, subtract 604 800 seconds from t. If the quantity $t-t_{oc}$ is less than –302 400 seconds, add 604 800 seconds to t.

3.1.1.2.1.3 *Satellite position*. The current satellite position (X_k, Y_k, Z_k) is defined as shown in Table B-13.

3.1.1.2.1.4 *Ionospheric correction*. The ionospheric correction ($T_{iono,L1}$) is defined as:

$$T_{iono,L1} = \begin{Bmatrix} F\times\left[5.0\times10^{-9} + AMP\left(1-\frac{x^2}{2}+\frac{x^4}{24}\right)\right], |x| < 1.57 \\ F\times(5.0\times10^{-9}) \qquad , |x| \geq 1.57 \end{Bmatrix} \text{(seconds)}$$

where

$$AMP = \begin{Bmatrix} \sum_{n=0}^{3} \alpha_n \phi_{m,}^n \quad AMP \geq 0 \\ \text{if } AMP < 0,\ AMP = 0 \end{Bmatrix} \text{(seconds)}$$

$$x = \frac{2\pi(t\text{-}50\ 400)}{PER}, \text{ (radians)}$$

$$PER = \begin{Bmatrix} \sum_{n=0}^{3} \beta_n \phi_{m,}^n \quad PER \geq 72\ 000 \\ \text{if } PER < 72\ 000,\ PER = 72\ 000 \end{Bmatrix} \text{(seconds)}$$

$F = 1.0 + 16.0[0.53 - E]^3$

α_n and β_n are the satellite transmitted data words with n = 0, 1, 2 and 3

$\phi_m = \phi_i + 0.064 \cos(\lambda_i - 1.617)$ (semi-circles)

$$\lambda_i = \lambda_u + \frac{\psi \sin A}{\cos\phi_i} \text{ (semi-circles)}$$

$\bar{\phi}_i = \phi_u + \psi \cos A$ (semi-circles)

$$\phi_i = \begin{Bmatrix} \phi_i = \bar{\phi}_i \text{ if } |\bar{\phi}_i| \leq 0.416 \\ \phi_i = +0.416 \text{ if } \bar{\phi}_i > 0.416, \\ \phi_i = -0.416 \text{ if } \bar{\phi}_i < -0.416 \end{Bmatrix} \text{(semi-circles)}$$

$\psi = \frac{0.0137}{E+0.11} - 0.022$ (semi-circles)

t = $4.32 \times 10^4 \lambda_i$ + GPS time (seconds) where $0 \leq t < 86\,400$,
therefore: if $t \geq 86\,400$ seconds, subtract 86 400 seconds; and
if $t < 0$ seconds, add 86 400 seconds

E = satellite elevation angle

3.1.1.2.1.4.1 The terms used in computation of ionospheric delay are as follows:

a) Satellite transmitted terms

α_n = the coefficients of a cubic equation representing the amplitude of the vertical delay (4 coefficients = 8 bits each) obtained from page 18 of subframe 4

β_n = the coefficients of a cubic equation representing the period of the model (4 coefficients = 8 bits each) obtained from page 18 of subframe 4

b) Receiver generated terms

E = elevation angle between the user and satellite (semi-circles)

A = azimuth angle between the user and satellite, measured clockwise positive from the true North (semi-circles)

ϕ_u = user geodetic latitude (semi-circles) WGS-84

λ_u = user geodetic longitude (semi-circles) WGS-84

GPS time = receiver computed system time

c) Computed terms

x = phase (radians)

F = obliquity factor (dimensionless)

t = local time (seconds)

ϕ_m = geomagnetic latitude of the earth projection of the ionospheric intersection point (mean ionospheric height assumed 350 km) (semi-circles)

λ_i = geomagnetic longitude of the earth projection of the ionospheric intersection point (semi-circles)

ϕ_i = geomagnetic latitude of the earth projection of the ionospheric intersection point (semi-circles)

ψ = earth's central angle between user position and earth projection of ionospheric intersection point (semi-circles)

Table B-13. Elements of coordinate systems

$A = \left(\sqrt{A}\right)^2$	Semi-major axis
$n_0 = \sqrt{\frac{\mu}{A^3}}$	Computed mean motion
$t_k = t - t_{oe}$	Time from ephemeris reference epoch*
$n = n_0 + \Delta n$	Corrected mean motion
$M_k = M_0 + nt_k$	Mean anomaly
$M_k = E_k - e \sin E_k$	Kepler's equation for eccentric anomaly (may be solved by iteration)
$v_k = \tan^{-1}\left\{\frac{\sin v_k}{\cos v_k}\right\} = \tan^{-1}\left\{\frac{\sqrt{1-e^2}\sin E_k/(1-e\cos E_k)}{(\cos E_k - e)/(1-e\cos E_k)}\right\}$	True anomaly
$E_k = \cos^{-1}\left\{\frac{e + \cos v_k}{1 + e\cos v_k}\right\}$	Eccentric anomaly
$\phi_k = v_k + \omega$	Argument of latitude
	Second Harmonic Perturbations
$\delta u_k = C_{us} \sin 2\phi_k + C_{uc} \cos 2\phi_k$	Argument of latitude correction
$\delta r_k = C_{rc} \sin 2\phi_k + C_{rs} \sin 2\phi_k$	Radius correction
$\delta i_k = C_{ic} \cos 2\phi_k + C_{is} \sin 2\phi_k$	Inclination correction
$u_k = \phi_k + \delta u_k$	Corrected argument of latitude
$r_k = A(1 - e \cos E_k) + \delta r_k$	Corrected radius
$i_k = i_0 + \delta i_k + (\text{iDOT})t_k$	Corrected inclination
$\left.\begin{array}{l} x'_k = r_k \cos u_k \\ y'_k = r_k \sin u_k \end{array}\right\}$	Positions in orbital plane
$\Omega_k = \Omega_0 + \left(\dot{\Omega} - \Omega_e\right)t_k - \dot{\Omega}_e t_{oe}$	Corrected longitude of ascending node
$\left.\begin{array}{l} x_k = x'_k \cos \Omega_k - y'_k \cos i_k \sin \Omega_k \\ y_k = x'_k \sin \Omega_k - y'_k \cos i_k \cos \Omega_k \\ z_k = y'_k \sin i_k \end{array}\right\}$	Earth-centred, earth-fixed coordinates

* t is GPS system time at time of transmission, i.e. GPS time corrected for transit time (range/speed of light). Furthermore, t_k is the actual total time difference between the time t and the epoch time t_{oe}, and must account for beginning or end-of-week crossovers. That is, if t_k is greater than 302 400 seconds, subtract 604 800 seconds from t_k. If t_k is less than –302 400 seconds, add 604 800 seconds to t_k.

3.1.1.2.2 *GPS PROTOCOLS FOR SINGLE-FREQUENCY (L5) AND DUAL-FREQUENCY (L1/L5) USERS*

3.1.1.2.2.1 *Parity algorithm*. The CNAV CRC word shall be calculated in the forward direction using a seed of 0. The sequence of 24 bits (p1, p2,..., p24) shall be generated from the sequence of information bits (m1, m2,..., m276) using the following generating polynomial:

$$g(X) = \sum_{i=0}^{24} g_i X^i$$

where g_i = 1 for 0, 1, 3, 4, 5, 6, 7, 10, 11, 14, 17, 18, 23, 24, and
0 otherwise.

Note.— See IS-GPS-705F for full details on the CNAV parity algorithm.

3.1.1.2.2.2 *Satellite clock correction*. GPS system time *t* shall be as follows:

$$t = t_{sv} - \Delta t_{sv}$$

where Δt_{sv} is computed using the equations defined in 3.1.1.2.1.2 and parameters from CNAV message Types 10 and 11 (for the relativistic correction term) and 30 through 37.

Note.—Additional terms apply to the satellite clock correction for single-frequency L5 users. Section 3.1.1.2.2.5 shows the satellite PRN code phase offset for the single frequency L5 I5 and L5 Q5 users, and $t = t_{sv} - (\Delta t_{sv})_{L5I5}$ *or* $t = t_{sv} - (\Delta t_{sv})_{L5Q5}$.

3.1.1.2.2.3 *Satellite position*. The current satellite position (X_k, Y_k, Z_k) shall be calculated as shown in Table B-14.

Note.— The ephemeris parameters: t_{oe}, ΔA, $\dot{A}$, Δn_0, $\Delta \dot{n}_0$, $M_{0\text{-}n}$, e_n, ω_n, $\Omega_{0\text{-}n}$, $\Delta\dot{\Omega}$, $i_{0\text{-}n}$, $\dot{i_{0\text{-}n}}$, $C_{is\text{-}n}$, $C_{ic\text{-}n}$, $C_{rs\text{-}n}$, $C_{rc\text{-}n}$, $C_{us\text{-}n}$, *and* $C_{uc\text{-}n}$, *are provided in CNAV message Types 10 and 11.*

3.1.1.2.2.4 *Integrity assured user range accuracy (IAURA)*

3.1.1.2.2.4.1 *Composite IAURA*. The composite IAURA value shall be the RSS of an elevation-dependent (ED) component and a non-elevation-dependent (NED) component.

$$IAURA = \sqrt{(adjusted\ IAURA_{ED})^2 + IAURA_{NED}^2}$$

3.1.1.2.2.4.2 *Elevation-dependent (ED) accuracy estimate*. An adjusted ED IAURA value (in metres) shall be computed from the upper bound value of the URA_{ED} obtained from message Type 10, Table B-10, and the equation:

$$adjusted\ IAURA_{ED} = URA_{ED}\ (sin(E+90))$$

where

E is the satellite elevation angle in degrees ($E \geq 0$)

3.1.1.2.2.4.3 *Non-elevation-dependent (NED) accuracy estimate*. The non-elevation-dependent IAURA value (in metres) shall be computed using the upper bound value of URA_{NED0} and the equation:

$$IAURA_{NED} = URA_{NED0} + URA_{NED1} \times (t - t_{op} + 604{,}800 \times (WN - WN_{op})$$

when $t - t_{op} + 604{,}800 \times (WN - WN_{op}) \leq 93{,}600$ seconds

and

$$IAURA_{NED} = URA_{NED0} + URA_{NED1} \times (t - t_{op} + 604{,}800 \times (WN - WN_{op}) + URA_{NED2} \times (t - t_{op} + 604{,}800 \bullet (WN - WN_{op}) - 93{,}600)^2$$

when $t - t_{op} + 604{,}800 \times (WN - WN_{op}) > 93{,}600$ seconds

where

t = GPS system time
WN, WN_{op}, t_{op}, URA_{NED0}, URA_{NED1}, URA_{NED2} are obtained from message Types 10, 30 to 37, and Table B-11.

3.1.1.2.2.5 *Estimated L5 group delay differential for single-frequency users.*

Note.— Inter-signal biases for L1/L5 dual-frequency users are corrected via the ionosphere-free pseudo-range described in 3.1.1.2.2.7.

3.1.1.2.2.5.1 For the single-frequency L5 I5 user, the satellite clock time, corrected for the L1/L5 inter-signal bias, shall be as follows:

$$(\Delta t_{SV})_{L5I5} = \Delta t_{SV} - T_{GD} + ISC_{L5I5}$$

3.1.1.2.2.5.2 For the single-frequency L5 Q5 user, the satellite clock time, corrected for the L1/L5 inter-signal bias, shall be as follows:

$$(\Delta t_{SV})_{L5Q5} = \Delta t_{SV} - T_{GD} + ISC_{L5Q5}$$

Note.— T_{GD}, ISC_{L5I5} and ISC_{L5Q5} are provided in CNAV message Type 30.

3.1.1.2.2.6 Ionospheric correction. For L5, the single-frequency ionospheric correction defined in 3.1.1.2.1.4 shall be multiplied by γ_{15}, ($T_{iono,L5} = \gamma_{15} T_{iono,L1}$), where $\gamma_{15} = (f_{L1}/f_{L5})^2 = (1\,575.42/1\,176.45)^2 = (154/115)^2$.

3.1.1.2.2.7 *L1/L5 ionospheric correction for dual-frequency users.*

3.1.1.2.2.7.1 The ionosphere-free pseudo-range for the dual-frequency (L1 C/A and L5 I5) user shall be as follows:

$$PR = \frac{\left(PR_{L5I5} - \gamma_{15} PR_{L1C/A}\right) + c\left(ISC_{L5I5} - \gamma_{15} ISC_{L1C/A}\right)}{1 - \gamma_{15}} - cT_{GD}$$

where

PR = pseudo-range corrected for ionospheric effects,
PRi = pseudo-range measured on the channel indicated by the subscript,
ISCi = inter-signal correction for the channel indicated by the subscript, provided in CNAV message Type 30,
T_{GD} = L1 P(Y) and L2 P(Y) inter-signal correction, provided in CNAV message Type 30,
c = speed of light, and
γ_{15} = $(f_{L1}/f_{L5})^2 = (1\,575.42/1\,176.45)^2 = (154/115)^2$.

3.1.1.2.2.7.2 The ionosphere-free pseudo-range for the dual-frequency (L1 C/A and L5 Q5) user shall be as follows:

$$PR = \frac{\left(PR_{L5Q5} - \gamma_{15} PR_{L1C/A}\right) + c\left(ISC_{L5Q5} - \gamma_{15} ISC_{L1C/A}\right)}{1 - \gamma_{15}} - cT_{GD}$$

where

PR, PRi, ISCi, T_{GD}, c and γ_{15} are as defined above.

Table B-14. Elements of coordinate systems for L5 CNAV data

$t_k = t - t_{oe}$	Time from ephemeris reference epoch*
$A_0 = A_{REF} + \Delta A$	Semi-major axis at reference time**
$A_k = A_0 + \dot{A}t_k$	Semi-major axis
$n_0 = \sqrt{\frac{\mu}{A_0^3}}$	Computed mean motion
$\Delta n_A = \Delta n_0 + \frac{1}{2}\dot{\Delta n}_0 t_k$	Mean motion difference from computed value
$n_A = n_0 + \Delta n_A$	Corrected mean motion
$M_k = M_0 + n_A t_k$	Mean anomaly
$M_k = E_k - e_n \sin E_k$	Kepler's equation for eccentric anomaly (may be solved by iteration)
$v_k = \tan^{-1}\left\{\frac{\sin v_k}{\cos v_k}\right\} = \tan^{-1}\left\{\frac{\sqrt{1-e^2}\sin E_k/(1 - e\cos E_k)}{(\cos E_k - e)/(1 - e\cos E_k)}\right\}$	True anomaly
$E_k = \cos^{-1}\left\{\frac{e + \cos v_k}{1 + e\cos v_k}\right\}$	Eccentric anomaly
$\phi_k = v_k + \omega$	Argument of latitude
	Second Harmonic Perturbations
$\delta u_k = C_{us\text{-}n}\sin 2\phi_k + C_{uc\text{-}n}\cos 2\phi_k$	Argument of latitude correction
$\delta r_k = C_{rc\text{-}n}\sin 2\phi_k + C_{rs\text{-}n}\sin 2\phi_k$	Radius correction
$\delta i_k = C_{is\text{-}n}\sin 2\phi_k + C_{ic\text{-}n}\cos 2\phi_k$	Inclination correction
$u_k = \phi_k + \delta u_k$	Corrected argument of latitude
$r_k = A_k(1 - e_n \cos E_k) + \delta r_k$	Corrected radius
$i_k = i_0 + \dot{i}_{0-n}t_k + \delta i_k$	Corrected inclination
$\left.\begin{array}{l} x'_k = r_k\cos u_k \\ y'_k = r_k\sin u_k \end{array}\right\}$	Positions in orbital plane
$\dot{\Omega} = \dot{\Omega}_{REF} + \dot{\Delta\Omega}$	Rate of right ascension***
$\Omega_k = \Omega_{0-n} + (\dot{\Omega} - \dot{\Omega}_e)t_k - \dot{\Omega}_e t_{oe}$	Corrected longitude of ascending node
$\left.\begin{array}{l} x_k = x'_k\cos\Omega_k - y'_k\cos i_k\sin\Omega_k \\ y_k = x'_k\sin\Omega_k - y'_k\cos i_k\cos\Omega_k \\ z_k = y'_k\sin i_k \end{array}\right\}$	Earth-Centred, Earth-Fixed coordinates

* t is GPS system time at time of transmission, i.e. GPS time corrected for transit time (range/speed of light). Furthermore, t_k is the actual total time difference between the time t and the epoch time t_{oe}, and must account for beginning or end-of-week crossovers. That is, if t_k is greater than 302 400 seconds, subtract 604 800 seconds from t_k. If t_k is less than -302 400 seconds, add 604 800 seconds to t_k.

** A_{REF} = 26 559 710 metres

*** $\dot{\Omega}_{REF} = -2{,}6 \times 10^{-9}$ semi-circles/second

3.1.1.3 AIRCRAFT ELEMENTS

3.1.1.3.1 *GPS RECEIVER*

3.1.1.3.1.1 *Reserved*.

3.1.1.3.1.2 *Satellite tracking*. The receiver shall provide the capability to continuously track a minimum of four satellites and generate a position solution based upon those measurements.

3.1.1.3.1.3 *Doppler shift*. The receiver shall be able to compensate for dynamic Doppler shift effects on nominal SPS signal carrier phase and C/A code measurements. The receiver shall compensate for the Doppler shift that is unique to the anticipated application.

3.1.1.3.1.4 *Resistance to interference*. The receiver shall meet the requirements for resistance to interference as specified in Chapter 3, 3.7.

3.1.1.3.1.5 *Application of clock and ephemeris data*. The receiver shall ensure that it is using the correct ephemeris and clock data before providing any position solution. For LNAV data, the receiver shall monitor the IODC and IODE values and shall update ephemeris and clock databased upon a detected change in one or both of these values. For CNAV data, the receiver shall monitor the t_{oe}, t_{oc} and t_{op} values and shall update ephemeris and clock data based upon a detected change in any of these values.

3.1.1.4 TIME

GPS time shall be referenced to a UTC (as maintained by the U.S. Naval Observatory) zero time-point defined as midnight on the night of 5 January 1980/morning of 6 January 1980. The largest unit used in stating GPS time shall be 1 week, defined as 604 800 seconds. The GPS time scale shall be maintained to be within 1 microsecond of UTC (Modulo 1 second) after correction for the integer number of leap seconds difference. The navigation data shall contain the requisite data for relating GPS time to UTC.

3.1.2 Global navigation satellite system (GLONASS) channel of standard accuracy (CSA) (L1/L3)

Note.— In this section, the term GLONASS refers to all satellites in the constellation. Standards relating only to GLONASS-M satellites are qualified accordingly.

3.1.2.1 NON-AIRCRAFT ELEMENTS

3.1.2.1.1 *L1OF (L1 OPEN SERVICE FDMA) RF CHARACTERISTICS*

Note.— Additional information on the L1OF RF characteristics is given in the GLONASS Navigational radio signal in bands L1, L2 Interface Control Document (Edition 5.1), dated 2008 (hereinafter referred to as "GLONASS FDMA ICD").

3.1.2.1.1.1 *Carrier frequencies*. The nominal values of L1 carrier frequencies shall be as defined by the following expressions:

$$f_{k1} = f_{01} + k\Delta f_1$$

where

where

k = –7, …, 0, 1, …, 6 are carrier numbers (frequency channels) of the signals transmitted by GLONASS satellites in the L1 sub-band;
f_{01} = 1 602 MHz; and
Δf_1 = 0.5625 MHz.

Carrier frequencies shall be coherently derived from a common on-board time/frequency standard. The nominal value of frequency, as observed on the ground, shall be equal to 5.0 MHz. The carrier frequency of a GLONASS satellite shall be within $\pm 2 \times 10^{-11}$ relative to its nominal value f_k.

Note 1.— The nominal values of carrier frequencies for carrier numbers k are given in Table B-15.

Note 2.— For GLONASS-M satellites, the L2 channel of standard accuracy (CSA) navigation signals will occupy the 1 242.9375 – 1 251.6875 MHz ±0.511 MHz bandwidth as defined by the following expressions:

$$f_{k2} = f_{02} + k\Delta f_2,$$

$$f_{02} = 1\ 246\ \text{MHz};\ \Delta f_2 = 0.4375\ \text{MHz}.$$

For any given value of k the ratio of carrier frequencies of L1 and L2 sub-bands will be equal to:

$$\frac{f_{k2}}{f_{k1}} = \frac{7}{9}$$

Table B-15. L1 carrier frequencies

Carrier number	H^{A}_{n} *(see 3.2.1.3.4)*	*Nominal value of frequency in L1 sub-band (MHz)*
6	6	1 605.3750
5	5	1 604.8125
4	4	1 604.2500
3	3	1 603.6875
2	2	1 603.1250
1	1	1 602.5625
0	0	1 602.0000
− 1	31	1 601.4375
− 2	30	1 600.8750
− 3	29	1 600.3125
− 4	28	1 599.7500
− 5	27	1 599.1875
− 6	26	1 598.6250
− 7	25	1 598.0625

3.1.2.1.1.2 *Carrier phase noise*. The phase noise spectral density of the unmodulated carrier shall be such that a phase locked loop of 10 Hz one-sided noise bandwidth provides the accuracy of carrier phase tracking not worse than 0.1 radian (1 sigma).

3.1.2.1.1.3 *GLONASS pseudo-random code generation*. The pseudo-random ranging code shall be a 511-bit sequence that is sampled at the output of the seventh stage of a 9-stage shift register. The initialisation vector to generate this sequence shall be "111111111". The generating polynomial that corresponds to the 9-stage shift register shall be:

$$G(x) = 1 + x^5 + x^9.$$

3.1.2.1.1.4 *Spurious emissions*. The power of the transmitted RF signal beyond the GLONASS allocated bandwidth shall not be more than –40 dB relative to the power of the unmodulated carrier.

Note 1.— GLONASS satellites launched during 1998 to 2005 and beyond use filters limiting out-of-band emissions to the harmful interference limit contained in Recommendation ITU R RA.769 for the 1 660 – 1 670 MHz band.

Note 2.— GLONASS satellites launched beyond 2005 use filters limiting out-of-band emissions to the harmful interference limit contained in Recommendation ITU-R RA.769 for the 1 610.6 – 1 613.8 MHz and 1 660 – 1 670 MHz bands.

3.1.2.1.1.5 *Correlation loss*. The loss in the recovered signal power due to imperfections in the signal modulation and waveform distortion shall not exceed 0.8 dB.

Note.— The loss in signal power is the difference between the broadcast power in a 1.022 MHz bandwidth and the signal power recovered by a noise-free, loss-free receiver with 1-chip correlator spacing and a 1.022 MHz bandwidth.

3.1.2.1.2 *L1OF (L1 OPEN SERVICE FDMA) DATA STRUCTURE*

Note.— Additional information concerning the data structure is given in the GLONASS FDMA ICD.

3.1.2.1.2.1 *General*. The navigation message shall be transmitted as a pattern of digital data which are coded by Hamming code and transformed into relative code. Structurally, the data pattern shall be generated as continuously repeating superframes. The superframe shall consist of the frames and the frames shall consist of the strings. The boundaries of strings, frames and superframes of navigation messages from different GLONASS satellites shall be synchronized within 2 milliseconds.

3.1.2.1.2.2 *Superframe structure*. The superframe shall have a 2.5-minute duration and shall consist of 5 frames. Within each superframe a total content of non-immediate information (almanac for 24 GLONASS satellites) shall be transmitted.

Note.— Superframe structure with indication of frame numbers in the superframe and string numbers in the frames is shown in Figure B-7.

3.1.2.1.2.3 *Frame structure*. Each frame shall have a 30-second duration and shall consist of 15 strings. Within each frame the total content of immediate information (ephemeris and time parameters) for given satellite and a part of non-immediate information (almanac) shall be transmitted. The frames 1 through 4 shall contain the part of almanac for 20 satellites (5 satellites per frame) and frame 5 shall contain the remainder of almanac for 4 satellites. The almanac for one satellite shall occupy two strings.

Note.— Frame structures are shown in Figures B-8 and B-9.

3.1.2.1.2.4 *String structure*. Each string shall have a 2-second duration and shall contain binary chips of data and time mark. During the last 0.3 second within this 2-second interval (at the end of each string) the time mark shall be transmitted. The time mark (shortened pseudo-random sequence) shall consist of 30 chips with a time duration for each chip of 10 milliseconds and having the following sequence:

1 1 1 1 1 0 0 0 1 1 0 1 1 1 0 1 0 1 0 0 0 0 1 0 0 1 0 1 1 0.

During the first 1.7 seconds within this 2-second interval (in the beginning of each string) 85 bits of data (each data bit of a 20 milliseconds duration) shall be transmitted in bi-binary format. The numbers of bits in the string shall be increased from right to left. Along with information bits (bit positions 9 through 84) the check bits of Hamming code (KX) (bit positions 1 through 8) shall be transmitted. The Hamming code shall have a code length of 4. The data of one string shall be separated from the data of adjacent strings by time mark (MB). The words of the data shall be registered by MSB ahead. In each string bit position, 85 shall be an idle chip ("0") and be transmitted first.

3.1.2.1.2.4.1 *Strings 1 through 4*. The information contained in strings 1 through 4 of each frame shall correspond to the satellite from which it is transmitted. This information shall not be changed within the superframe.

3.1.2.1.2.4.2 *Strings 5 through 15*. Strings 5 through 15 of each frame shall contain GLONASS almanac for 4 or 5 satellites. The information contained in the fifth string shall be repeated in each frame of the superframe.

Note.— String structure is given in Figure B-10.

3.1.2.1.3 *L1OF (L1 OPEN SERVICE FDMA) DATA CONTENT*

Note.— Additional information concerning the data content is given in the GLONASS FDMA ICD.

3.1.2.1.3.1 *Ephemeris and time parameters.* The ephemeris and time parameters shall be as follows:

M = the string number within the frame;

t_k = the time referenced to the beginning of the frame within the current day. It is calculated according to the satellite time scale. The integer number of hours elapsed since the beginning of the current day is registered in the 5 MSBs. The integer number of minutes elapsed since the beginning of the current hour is registered in the next 6 bits. The number of 30-second intervals elapsed since the beginning of the current minute is registered in the one LSB. The beginning of the day according to the satellite time scale coincides with the beginning of the recurrent superframe;

t_b = the time interval within the current day according to UTC(SU) + 03 hours 00 min. The immediate data transmitted within the frame are referred to the middle of t_b. Duration of the time interval and therefore the maximum value of t_b depends on the value of the flag P1;

$\gamma_n(t_b)$ = the relative deviation of predicted carrier frequency value of n-satellite from the nominal value at the instant t_b, i.e.

$$\gamma_n(t_b) = \frac{f_n(t_b) - f_{Hn}}{f_{Hn}}$$

where

$f_n(t_b)$ = the forecast frequency of n-satellite clocks at an instant t_b;

f_{Hn} = the nominal value of frequency of n-satellite clocks;

$\tau_n(t_b)$ = the correction to the n-satellite time t_n relative to GLONASS time t_c at an instant t_b, i.e. $\tau_n(t_b) = t_c(t_b) - t_n(t_b)$;

$x_n(t_b)$, $y_n(t_b)$, $z_n(t_b)$ = the coordinates of n-satellite in PZ-90 coordinate system at an instant t_b;

$\dot{x}_n(t_b)$, $\dot{y}_n(t_b)$, $\dot{z}_n(t_b)$ = the velocity vector components of n-satellite in PZ-90 coordinate system at an instant t_b;

$\ddot{x}_n(t_b)$, $\ddot{y}_n(t_b)$, $\ddot{z}_n(t_b)$ = the acceleration components of n-satellite in PZ-90 coordinate system at an instant t_b, which are caused by effect of sun and moon;

E_n = an indication of the "age" of the immediate information, i.e. a time interval elapsed since the instant of its calculation (uploading) until the instant t_b for n-satellite;

B_n = the health flag. Values greater than 3 indicate the fact of malfunction of given satellite;

P1 = a flag indicating the time interval between the current and previous value of the t_b parameters in minutes as shown:

P1	Time interval between adjacent values of t_b in minutes
0	0
1	30
10	45
11	60

P2 = a flag indicating whether the value of t_b is odd or even. A value of "1" indicates a 30-minute interval of service information transmit (t_b = 1, 3, 5 …), a value of "0" indicates a 60-minute interval of service information transmit (t_b = 2, 6, 10 …);

P3 = a flag indicating the number of satellites for which an almanac is transmitted within a given frame. "1" corresponds to 5 satellites and "0" corresponds to 4 satellites; and

$\Delta\tau_n$ = the time difference between the navigation RF signal transmitted in L2 sub-band and navigation RF signal transmitted in L1 sub-band by given satellite:

$$\Delta\tau_n = t_{f2} - t_{f1}$$

where t_{f1}, t_{f2} are the equipment delays in L1 and L2 sub-bands respectively, expressed in units of time.

3.1.2.1.3.2 *Ephemeris and time parameters*. The ephemeris and time parameters shall be as indicated in Table B-16. For the words for which numeric values may be positive or negative, the MSB shall be the sign bit. The chip "0" shall correspond to the "+" sign and the chip "1" shall correspond to the "–" sign.

3.1.2.1.3.3 *Arrangement of the ephemeris and time parameters*. Arrangements of the ephemeris and time parameters within a frame shall be as indicated in Table B-17.

3.1.2.1.3.4 *Almanac parameters*. The almanac parameters shall be as follows:

A = an index showing relation of this parameter with the almanac;

M^A_n = an index of the modification of n^A-satellite: "00" indicates GLONASS satellite, and "01" indicates GLONASS-M satellite;

τ_c = the GLONASS time scale correction to UTC(SU) time. The correction τ_c is given at the instant of day N^A;

N^A = the calendar day number within the 4-year period beginning since the leap year. The correction τ_c and other almanac data (almanac of orbits and almanac of phases) relate to this day number;

n^A = the slot number occupied by n-satellite;

H^A_n = the channel number of a carrier frequency of n^A-satellite (Table B-15);

λ^A_n = the longitude of the first (within the N^A-day) ascending node of n^A-satellite orbit in PZ-90 coordinate system;

$t_\lambda{}^A_n$ = the time of the first ascending node passage of n^A-satellite within N^A-day;

Table B-16. Ephemeris and time parameters

Parameter	*Number of bits*	*Scale factor (LSB)*	*Effective range*	*Units*
m	4	1		dimensionless
	5	1	0 to 23	hours
t_k	6	1	0 to 59	minutes
	1	30	0 or 30	seconds
t_b	7	15	15...1 425	minutes
$\gamma_n(t_b)$	11	2^{-40}	$\pm 2^{-30}$	dimensionless
$\tau_n(t_b)$	22	2^{-30}	$\pm 2^{-9}$	seconds
$x_n(t_b)$, $y_n(t_b)$, $z_n(t_b)$	27	2^{-11}	$\pm 2.7 \times 10^4$	km
$\dot{x}_n(t_b)$, $\dot{y}_n(t_b)$, $\dot{z}_n(t_b)$	24	2^{-20}	±4.3	km/second
$\ddot{x}_n(t_b)$, $\ddot{y}_n(t_b)$, $\ddot{z}_n(t_b)$	5	2^{-30}	$\pm 6.2 \times 10^{-9}$	km/second^2
E_n	5	1	0 to 31	days
B_n	3	1	0 to 7	dimensionless
P1	2	————	as detailed in 3.1.2.1.3.1	————
P2	1	1	0; 1	dimensionless
P3	1	1	0; 1	dimensionless
$\Delta\tau_n$	5	2^{-30}	$\pm 13.97 \times 10^{-9}$	seconds

Table B-17. Arrangements of the ephemeris and time parameters within the frame

Parameter	*Number of bits*	*String number within the frame*	*Bit number within the frame*
m	4	1...15	81 – 84
t_k	12	1	65 – 76
t_b	7	2	70 – 76
$\gamma_n(t_b)$	11	3	69 – 79
$\tau_n(t_b)$	22	4	59 – 80
$x_n(t_b)$	27	1	9 – 35
$y_n(t_b)$	27	2	9 – 35
$z_n(t_b)$	27	3	9 – 35
$\dot{x}_n(t_b)$	24	1	41 – 64
$\dot{y}_n(t_b)$	24	2	41 – 64
$\dot{z}_n(t_b)$	24	3	41 – 64
$\ddot{x}_n(t_b)$	5	1	36 – 40
$\ddot{y}_n(t_b)$	5	2	36 – 40
$\ddot{z}_n(t_b)$	5	3	36 – 40
E_n	5	4	49 – 53
B_n	3	2	78 – 80
P1	2	1	77 – 78
P2	1	2	77
P3	1	3	80
$\Delta\tau_n$	5	4	54 – 58

$\Delta i^A{}_n$ = the correction to the mean value of inclination of n^A-satellite at instant of $t_\lambda{}^A{}_n$ (mean value of inclination is equal to 63 degrees);

$\Delta T^A{}_n$ = the correction to the mean value of Draconian period of the n^A-satellite at the instant of $t_\lambda{}^A{}_n$ (mean value of Draconian period T is equal to 43 200 seconds);

$\Delta\dot{T}^A{}_n$ = the rate of change of Draconian period of n^A-satellite;

$\varepsilon^A{}_n$ = the eccentricity of n^A-satellite at instant of $t_\lambda{}^A{}_n$;

$\omega^A{}_n$ = the argument of perigee of n^A-satellite at the instant of $t_\lambda{}^A{}_n$;

$\tau^A{}_n$ = the coarse value of n^A-satellite time correction to GLONASS time at instant of $t_\lambda{}^A{}_n$;

$C^A{}_n$ = a generalized “unhealthy flag” of n^A-satellite at instant of almanac upload almanac of orbits and phases. When $C_n = 0$, this indicates that n-satellite is non-operational. When $C_n = 1$, this indicates that n-satellite is operational.

3.1.2.1.3.5 *Partition and coding of almanac parameters*. The GLONASS almanac, transmitted within the superframe, shall be partitioned over the superframe, as indicated in Table B-21. The numeric values of almanac parameters shall be positive or negative. The MSB shall be the sign bit, the chip “0” shall correspond to the “+” sign, and the chip “1” shall correspond to the “–” sign. The almanac parameters shall be coded as indicated in Table B-18.

3.1.2.1.3.6 *Arrangement of the almanac parameters*. Arrangement of the almanac words within the frame shall be as indicated in Table B-19.

3.1.2.1.4 *CONTENT AND STRUCTURE OF ADDITIONAL DATA TRANSMITTED BY GLONASS-M SATELLITES IN L1OF (L1 OPEN SERVICE FDMA)*

Note.— Additional information concerning the data content and structure is given in the GLONASS FDMA ICD.

3.1.2.1.4.1 *Letter designation of additional data*. In addition to the GLONASS data, GLONASS-M satellites shall transmit the following additional data as indicated in Table B-20:

n – an index of the satellite transmitting the given navigation signal: it corresponds to a slot number within GLONASS constellation;

l_n – health flag for n-th satellite: "0" indicates the n-th satellite is healthy, "1" indicates the malfunction of the n-th satellite;

B1 – coefficient to determine ΔUT1: it is equal to the difference between UT1 and UTC at the beginning of the day (N^A), expressed in seconds;

B2 – coefficient to determine ΔUT1: it is equal to the daily change of the difference ΔUT1 (expressed in seconds for a mean sun day).

These coefficients shall be used to transform between UTC(SU) and UT1:

$$\Delta UT1 = UTC(SU) - UT1,$$

where

UT1 – Universal Time referenced to the Mean Greenwich Meridian (taking account of Pole motion),

UTC(SU) – Coordinated Universal Time of the Russian Federation State Standard,

$$\Delta UT1 = B1 + B2 \times (N_T - N^A),$$

KP – notification of a forthcoming leap second correction of UTC (±1 s) as shown:

KP	UTC second correction data
00	No UTC correction at the end of the current quarter
01	UTC correction by plus 1 s at the end of the current quarter
11	UTC correction by minus 1 s at the end of the current quarter

Note.— GLONASS system timescale correction is usually performed once a year at midnight 00 hours 00 minutes 00 seconds in accordance with the early notification of the International Time Bureau (BIH/BIPM) at the end of a quarter:

from 31 December to 1 January – first quarter,
from 31 March to 1 April – second quarter,
from 30 June to 1 July – third quarter,
from 30 September to 1 October – fourth quarter.

N_T – current date, calendar number of the day within the four-year interval starting from 1 January in a leap year;

Note.— An example of N_T transformation into the common form of current data information (dd/mm/yy) is presented in Attachment D, 4.1.2.7.1.

N_4 – four-year interval number starting from 1996;

F_T – a parameter that provides the predicted satellite user range accuracy at time tb. Coding is as indicated in Table B-19;

M – type of satellite transmitting the navigation signal. 00 refers to a GLONASS satellite; 01 refers to a GLONASS-M satellite;

P4 – flag to show that updated ephemeris parameters are present. "1" indicates that an updated ephemeris or frequency/time parameters have been uploaded by the control segment;

Note.— Updated ephemeris or frequency/time information is transmitted in the next interval after the end of the current interval t_b.

P – technological parameter of control segment indicating the satellite operation mode in respect of time parameters:

00 – τ_c parameter relayed from control segment, τ_{GPS} parameter relayed from control segment;

01 – τ_c parameter relayed from control segment, τ_{GPS} parameter calculated on-board the GLONASS-M satellite;

10 – τ_c parameter calculated on-board the GLONASS-M satellite; τ_{GPS} parameter relayed from control segment;

11 – τ_c parameter calculated on-board the GLONASS-M satellite; τ_{GPS} parameter calculated on-board the GLONASS-M satellite;

τ_{GPS} – correction to GPS time relative to GLONASS time:

$$T_{GPS} - T_{GL} = \Delta T + \tau_{GPS},$$

where

ΔT is the integer part, and τ_{GPS} is the fractional part of the difference between the system timescales expressed in seconds.

Note.— The integer part ΔT is determined from the GPS navigation message by the user receiver.

M^A_n – type of satellite n^A: coding "00" indicates a GLONASS satellite, coding "01" indicates a GLONASS-M satellite.

3.1.2.1.4.2 Additional data parameters. Additional data parameters are defined in Tables B-18 to B-20.

3.1.2.1.4.3 Location of additional data words within GLONASS-M navigation message. The required location of additional data words within the GLONASS-M navigation message is defined in Table B-20.

Table B-18. Additional data parameters

Parameter	*No. of bits*	*Scale factor (LSB)*	*Effective range*	*Units*
n	5	1	0 to 31	Dimensionless
l_n	1	1	0; 1	Dimensionless
B1	11	2^{-10}	±0.9	seconds
B2	10	2^{-16}	$(-4.5 \text{ to } 3.5) \times 10^{-3}$	s/mean sun day
KP	2	1	0 to 3	Dimensionless
N_T	11	1	0 to 1 461	days
N_4	5	1	1 to 31	four-year interval
F_T	4		See table B-19	
M	2	1	0 to 3	Dimensionless
P4	1	1	0; 1	Dimensionless
P	2	1	00,01,10,11	Dimensionless
τ_{GPS}	22	2^{-30}	$\pm 1.9 \times 10^{-3}$	seconds
M^A_n	2	1	0 to 3	Dimensionless

Table B-19. F_T word coding

F_T value	*Pseudorange accuracy, 1 sigma (m)*
0	1
1	2
2	2.5
3	4
4	5
5	7
6	10
7	12
8	14
9	16
10	32
11	64
12	128
13	256
14	512
15	Not used

Table B-20. Location of additional data words within the GLONASS-M navigation message

Word	*Number of bits*	*String number within the superframe*	*Bit number within the string*
n	5	4, 19, 34, 49, 64	11 – 15
l_n	1	5, 7, 9, 11, 13, 15, 20, 22, 24, 26, 28, 30, 35, 37, 39, 41, 43, 45, 50, 52, 54, 56, 58, 60, 65, 67, 69, 71, 73, 75 3, 18, 33, 48, 63	9 65
B1	11	74 (within the superframe)	70 – 80
B2	10	74 (within the superframe)	60 – 69
KP	2	74 (within the superframe)	58 – 59
N_T	11	4, 19, 34, 49, 64	16 – 26
N_4	5	5, 20, 35, 50, 65	32 – 36
F_T	4	4, 19, 34, 49, 64	30 – 33
M	2	4, 19, 34, 49, 64	9 – 10
P4	1	4, 19, 34, 49, 64	34
P	2	3, 18, 33, 48, 63	66 – 67
ι_{GPS}	22	5, 20, 35, 50, 65	10 – 31
M^A_n	2	6, 8, 10, 12, 14	78 – 79

Table B-21. Almanac partition within the superframe

Frame number within the superframe	*Satellite numbers, for which almanac is transmitted within given frame*
1	1 to 5
2	6 to 10
3	11 to 15
4	16 to 20
5	21 to 24

Table B-22. Almanac parameters coding

Parameter	*Number of bits*	*Scale factor (LSB)*	*Effective range*	*Units*
M^{A}_{n}	2	1	0 to 3	dimensionless
τ_c	28	2^{-27}	±1	seconds
N^A	11	1	1 to 1 461	days
n^A	5	1	1 to 24	dimensionless
H^{A}_{n}	5	1	0 to 31	dimensionless
λ^{A}_{n}	21	2^{-20}	±1	semi-circles
$t_{\lambda^{A}_{n}}$	21	2^{-5}	0 to 44 100	seconds
Δi^{A}_{n}	18	2^{-20}	±0.067	semi-circles
ΔT^{A}_{n}	22	2^{-9}	$\pm 3.6 \times 10^{3}$	seconds/revolution
$\Delta \dot{T}^{A}_{n}$	7	2^{-14}	$\pm 2^{-8}$	seconds/revolution^2
ε^{A}_{n}	15	2^{-20}	0 to 0.03	dimensionless
ω^{A}_{n}	16	2^{-15}	±1	semi-circles
$t_{\tau^{A}_{n}}$	10	2^{-18}	$\pm 1.9 \times 10^{-3}$	seconds
C^{A}_{n}	1	1	0 to 1	dimensionless

Table B-23. Arrangement of almanac parameters within the frame

Parameter	*Number of bits*	*String number within the frame*	*Bit number within the string*
M^{A_n}	2	6, 8, 10, 12, 14	78 – 79
τ_c	28	5	42 – 69
N^A	11	5	70 – 80
n^A	5	6, 8, 10, 12, 14	73 – 77
H^{A_n}	5	7, 9, 11, 13, 15	10 – 14
λ^{A_n}	21	6, 8, 10, 12, 14	42 – 62
$t\lambda^{A_n}$	21	7, 9, 11, 13, 15	44 – 64
Δi^{A_n}	18	6, 8, 10, 12, 14	24 – 41
ΔT^{A_n}	22	7, 9, 11, 13, 15	22 – 43
^{A_n}	7	7, 9, 11, 13, 15	15 – 21
ε^{A_n}	15	6, 8, 10, 12, 14	9 – 23
ω^{A_n}	16	7, 9, 11, 13, 15	65 – 80
$t_\tau{}^{A_n}$	10	6, 8, 10, 12, 14	63 – 72
C^{A_n}	1	6, 8, 10, 12, 14	80

Note.— String numbers of the first four frames within superframe are given. There are no almanac parameters in 14th and 15th strings of 5th frame.

3.1.2.1.5 *L1OC, L3OC RF CHARACTERISTICS*

Note.— Additional information concerning the RF characteristics is given in the GLONASS CDMA ICD General Description of CDMA Signal System, Edition 1.0, dated 2016 (hereinafter referred to as "GLONASS CDMA ICD General Description"); in the GLONASS CDMA ICD L1 band; and in the GLONASS CDMA ICD L3 band.

3.1.2.1.5.1 The L1OC signal shall contain L1OCd data and L1OCp pilot components of equal power levels. These components shall be obtained by chip-by-chip time-division multiplexing of two pseudo random noise sequences. The L1OC signal shall be in phase quadrature with the L1SC signal. L1OC leads L1SC by $\pi/2$ radians as shown in Figure B-11A.

Note.— The L1SC signal is a CDMA secured service navigation signal in the L1 frequency band and is not used in aviation.

3.1.2.1.5.2 The L3OC signal shall contain L3OCd data and L3OCp pilot components of equal power levels. These components shall occupy phase quadratures I and Q, respectively. L3OCd leads L3OCp by $\pi/2$ radians as shown in Figure B-11A.

3.1.2.1.5.3 *Carrier phase noise*. The phase noise spectral density of the unmodulated carrier shall be such that a phase locked loop of 10 Hz one-sided noise bandwidth shall be able to track the carrier to accuracy no worse than 0.01 radians rms.

3.1.2.1.5.4 *Spurious emissions*. The power of the transmitted RF signal beyond the GLONASS allocated bandwidth shall not be more than –40 dB relative to the power of the unmodulated carrier.

Note 1.— The GLONASS allocated bandwidths are L1 (1 592.9 – 1 610 MHz), L2 (1 237.8 – 1 256.8 MHz) and L3 (1 190.35 – 1 212.23 MHz).

Note 2.— GLONASS satellites use filters limiting out-of-band emissions to the harmful interference limit contained in Recommendation ITU-R RA.769 for the 1 610.6 – 1 613.8 MHz and 1 660 – 1 670 MHz bands.

3.1.2.1.5.5 *Correlation loss*. The loss in the recovered signal power due to imperfections in the signal modulation and waveform distortion shall not exceed 0.6 dB.

Note.— The loss in signal power is the difference between the broadcast power in the specified bandwidth and the signal power recovered by a noise-free, loss-free receiver with 1-chip correlator spacing and an RF front-end with the same bandwidth.

3.1.2.1.6 *L1OC, L3OC DATA STRUCTURE*

Note.— Additional information concerning the data structure is given in the GLONASS CDMA ICD General Description; in the GLONASS CDMA ICD L1 band; and in the GLONASS CDMA ICD L3 band.

3.1.2.1.6.1 *General*. The GLONASS CDMA navigation message shall be transmitted as a variable sequence of strings. Strings shall comprise service and data fields (separate bits or groups of bits containing specific parameters).

Note.— A pseudoframe is a set of strings of immediate and non-immediate data starting with the three strings of ephemeris and clock data (immediate data). The remaining strings of a pseudoframe contain non-immediate data.

3.1.2.1.6.2 *Service fields*. The structure of a service section shall be the same for each type of signal and include preamble, type of the string, time of the beginning of the string (TS), satellite ID number, signal parameters and cyclic redundancy check (CRC) bits to check the integrity of the string data.

3.1.2.1.6.3 *Data fields*. The structure of data fields shall depend on the string type. Each type of string shall contain a complete individual block of data with the exception of orbit and clock data, which occupies three types of strings and shall be transmitted as a continuous packet.

Note.— The message design may evolve together with future evolutions of GLONASS. This evolution may involve the inclusion of additional new string types, which can either contain new data types or modify the existing string types.

3.1.2.1.6.4 L1OC message characteristics

3.1.2.1.6.4.1 The L1OCd navigation message shall be transmitted at 125 bits/s. The message shall consist of 250-bit strings of 2-second duration as well as of 125- and 375-bit anomalous strings of 1- and 3-second duration, respectively.

3.1.2.1.6.4.2 *L1OCd nominal string structure*. Each L1OCd nominal string shall consist of 50-bit service fields, a 184-bit data field and a 16-bit CRC service field as shown in Figure B-11B. Transmission of a string shall start with bit 1 (the first bit of the preamble and end with bit 250 (last bit of CRC)).

3.1.2.1.6.4.3 *L1OCd service fields* shall be as shown in Table B-24.

Table B-24. Parameters of L1OCd service fields

Field	*Number of bits*	*Least significant bit*	*Value range*	*Unit*	*Description*
Preamble	12	1	010111110001	-	Constant time stamp
Type	6	1	0 – 63	-	Type of a current string
j	6	1	0 – 63	-	ID number of a satellite that transmits this navigation message. SV ID number “0” is reserved and can only be enabled upon termination of combined use of GLONASS CDMA and FDMA signals.
H^j	1	1	0, 1	-	healthy (“0”) or unhealthy (“1”) navigation signal
l^j	1	1	0, 1	-	validity (“0”) or invalidity (“1”) of the data transmitted in the current string
P1	4	Ground control call. This field is not used by user receivers.			
P2	1	Attribute of SV orientation regime: SV is Sun-pointing (“0”) or performs noon/midnight turn manoeuvre (“1”)			
KP	2	1	00, 01, 10, 11	-	Indication of the expected UTC(SU) correction at the end of current quarter on GMT. UTC(SU) corrections shall result in the corresponding corrections of L1OCd time: 00 – no correction planned; 01 – day length is increased by 1 s; 10 – correction decision is pending; 11 – day length is reduced by 1 s.
A	1	1	0, 1	-	Indication of the expected L1OCd signal time correction at the end of the next string: A = 0 – no correction is planned. A = 1 – correction is planned. The combination of A = 1 and KP = 11 in the current string denotes that the next string will be a Type 1 anomalous string of 1 s duration. The combination of A = 1 and KP = 01 in the current string denotes that the next string will be a Type 2 anomalous string of 3 s duration.
TS	16	1	0 – 43199	2 s	Time stamp digits expressed in 2-second intervals within a current day in L1OCd time.
CRC	16	1	Check bits of the cyclic code		

3.1.2.1.6.4.4 *L1OCd anomalous strings*. Anomalous strings shall be indicated by string Types 1 and 2. Strings of Type 1 shall be used to indicate the leap second corrections of L1OCd signal time when a day's length is reduced by 1 s. Strings of Type 1 shall consist of 50-bit service fields, a 59-bit data field and a 16-bit CRC service field as shown in Figure B-11C. Strings of Type 2 shall be used to indicate the leap second corrections of L1OCd signal time when a day's length is increased by 1 s. Strings of Type 2 shall consist of 50-bit service fields, a 301-bit data field and a 24-bit CRC service field as shown in Figure B-11D.

3.1.2.1.6.4.5 *L1OCd nominal strings CRC*. The CRC (250,234) generator polynomial shall have the following form:

$$g(X) = 1 + X + X^5 + X^6 + X^8 + X^9 + X^{10} + X^{11} + X^{13} + X^{14} + X^{16}.$$

A 234-bit data block shall be delivered to the encoder's input (starting with the 1st bit of the preamble and ending with the 184th bit of the data field). At the encoder's output, a 250-bit encoded block shall be generated by adding 16 check bits.

3.1.2.1.6.4.6 *L1OCd anomalous string Type 1 CRC*. CRC (125,109) shall be used in L1OCd Type 1 strings. It shall be generated similarly to code (250,234) except for the number of bits delivered to the input (109 instead of 234).

3.1.2.1.6.4.7 *L1OCd anomalous strings Type 2 CRC*. CRC (375,351) shall be used in L1OCd Type 2 strings. The CRC (375,351) generator polynomial shall have the following form:

$$g(X) = 1 + X + X^3 + X^4 + X^5 + X^6 + X^7 + X^{10} + X^{11} + X^{14} + X^{18} + X^{23} + X^{24}.$$

A 351-bit data block shall be delivered to the encoder's input (starting with the 1st bit of the preamble and ending with the 301st bit of the data field). At the encoder's output, a 375-bit encoded block shall be generated by adding 24 check bits.

3.1.2.1.6.5 L3OC message characteristics

3.1.2.1.6.5.1 The L3OCd navigation message shall be transmitted at 100 bits/s. The message shall consist of 300-bit strings of 3-second duration as well as of 200- and 400-bit anomalous strings of 2- and 4-second duration, respectively.

3.1.2.1.6.5.2 *L3OCd strings structure*. Each L3OCd nominal string shall consist of 57-bit service fields, a 219-bit long data field and 24-bit long CRC service field, as shown in Figure B-12A. Transmission of a string shall start with bit 1 (the first bit of the preamble) and end with bit 300 (the last bit of CRC).

3.1.2.1.6.5.3 *L3OCd service fields* shall be as shown in Table B-25.

Table B-25. Parameters of L3OCd service fields

Field	*Number of bits*	*Least significant bit*	*Value range*	*Unit*	*Description*
Preamble	20	1	00000100100101001110	-	Constant time stamp
Type	6	1	0 – 63	-	Type of a current string
TS	15	1	0 – 28799	3 s	Time stamp digits expressed in 3-second intervals within a current day in L3OCd time.
j	6	1	0 – 63	-	ID number of a satellite that transmits this navigation message. SV ID number "0" is reserved, and can only be enabled upon termination of combined use of GLONASS CDMA and FDMA signals.
H^j	1	1	0, 1	-	healthy ("0") or unhealthy ("1") navigation signal
l^j	1	1	0, 1	-	validity ("0") or invalidity ("1") of the data transmitted in the current string
P1	4	Ground control call. This field is not used by user receivers.			
P2	1	Attribute of SV orientation regime: SV is Sun-pointing ("0") or performs noon/midnight turn manoeuvre ("1")			
KP	2	1	00, 01, 10, 11	-	Indication of the expected UTC(SU) correction at the end of current quarter on GMT. UTC(SU) corrections shall result in the corresponding corrections of L3OCd time: 00 – no correction planned; 01 – day length is increased by 1 s; 10 – correction decision is pending; 11 – day length is reduced by 1 s.
A	1	1	0, 1	-	Indication of the expected L3OCd signal time correction at the end of the next string: A = 0 – no correction is planned. A = 1 – correction is planned. The combination of A = 1 and KP = 11 in the current string denotes that the next string will be a Type 1 anomalous string of 1 s duration. The combination of A = 1 and KP = 01 in the current string denotes that the next string will be a Type 2 anomalous string of 3 s duration.
CRC	24	1	Check bits of the cyclic code		

3.1.2.1.6.5.4 *L3OCd anomalous strings*. Anomalous strings shall be indicated by strings Types 1 and 2. Strings of Type 1 shall be used to indicate the leap second corrections of L3OCd signal time when a day's length is reduced by 1 s. Strings of Type 1 shall consist of 57-bit service fields, a 119-bit data field and a 24-bit CRC service field, as shown in Figure B-12B. Strings of Type 2 shall be used to indicate the leap second corrections of L3OCd signal time when a day's length is increased by 1 s. Strings of Type 2 shall consist of 57+20-bit service fields, a 299-bit data field and a 24-bit CRC service field as shown in Figure B-12C.

3.1.2.1.6.5.5 *L3OCd nominal strings CRC*. The CRC (300,276) generator polynomial shall have the following form:

$$g(X) = 1 + X + X^3 + X^4 + X^5 + X^6 + X^7 + X^{10} + X^{11} + X^{14} + X^{17} + X^{18} + X^{23} + X^{24}.$$

A 276-bit data block shall be delivered to the encoder's input (starting with the 1st bit of the preamble and ending with the 219th bit of the data field). At the encoder's output, a 300-bit encoded block shall be generated by adding 24 check bits.

3.1.2.1.6.5.6 *L3OCd anomalous string Type 1 CRC*. CRC (200,176) shall be used in L3OCd Type 1 strings. It shall be generated similarly to code (300,276) except for the number of bits delivered to the input (176 instead of 276).

3.1.2.1.6.5.7 *L3OCd anomalous string Type 2 CRC*. CRC (400,376) shall be used in L3OCd Type 2 strings. It shall be generated similarly to code (300,276) except for the number of bits delivered to the input (376 instead of 276).

3.1.2.1.7 *L1OC, L3OC DATA CONTENT*

Note.— Additional information concerning the data content is given in the GLONASS CDMA ICD General Description; in the GLONASS CDMA ICD L1 band; and in the GLONASS CDMA ICD L3 band.

3.1.2.1.7.1 L1OCd navigation messages shall contain the data in accordance with the list of string types shown in Table B-26.

Note.— Additional information concerning the data content of the L1OCd service and data fields is given in the GLONASS CDMA ICD L1 band.

Table B-26. Types of L1OCd strings and their content

String type	*Content*
10, 11, 12	Immediate data (ephemeris, time, health flags, F_E, F_T)
20	Almanac
25	Earth rotation parameters, ionospheric model parameters, UTC(SU) and international atomic time (TAI) offset model parameters.
16	SV attitude parameters during noon/midnight turn manoeuvre
31, 32	Long-term dynamic model parameters
50	International Satellite System for Search and Rescue (COSPAS–SARSAT) notices of receipt
60	Text messages
0	For technological tasks. Not used by user receivers.
1	Anomalous string used at the moment of leap second correction (-1 s)
2	Anomalous string used at the moment of leap second correction (+1 s)
Note.— String Types 10, 11 and 12 compose a data packet; therefore, string Type 11 always follows string Type 10 and string Type 12 always follows string Type 11.	

3.1.2.1.7.2 L3OCd navigation messages shall contain the data in accordance with the list of string types shown in Table B-27.

Note.— Additional information concerning the data content of the L3OCd service and data fields is given in the GLONASS CDMA ICD L3 band.

Table B-27. Types of L3OCd strings and their content

String type	*Content*
10, 11, 12	Immediate data (ephemeris, time, health flags, F_E, F_T)
20	Almanac
25	Earth rotation parameters, ionospheric model parameters, UTC(SU) and international atomic time (TAI) offset model parameters.
16	SV attitude parameters during noon/midnight turn manoeuvre
31, 32	Long-term dynamic model parameters
60	Text messages
0	For technological tasks. Not used by user receivers.
1	Anomalous string used at the moment of leap second correction (-1 s)
2	Anomalous string used at the moment of leap second correction (+1 s)
Note.— String Types 10, 11 and 12 compose a data package; therefore, string Type 11 always follows string Type 10 and string Type 12 always follows string Type 11.	

3.1.2.1.7.3 *Accuracy factor fields F_E, F_T.* Fields F_E and F_T shall contain equivalent pseudo-range errors (σ) related to the ephemeris and clock of transmitting satellite. Table B-28 shows values of F_E and F_T and the corresponding errors.

Table B-28. Ephemeris and time accuracy factors

F_E, F_T	-15	-14	-13	-12	-11	-10	-9	-8	-7	-6	-5	-4
σ, m	0.01	0.02	0.03	0.04	0.06	0.08	0.1	0.15	0.2	0.3	0.4	0.6
F_E, F_T	-3	-2	-1	0	1	2	3	4	5	6	7	8
σ, m	0.7	0.8	0.9	1	2	2.5	4	5	7	10	12	14
F_E, F_T	9	10	11	12	13	14	15					
σ, m	16	32	64	128	256	512	not defined					

3.1.2.1.7.4 The maximum interval of updating immediate data (string Types 10, 11 and 12) shall be 30 minutes. Considering that various types of non-immediate data are updated at various intervals, the maximum update interval for all non-immediate data shall be 48 hours.

Note.— Long-term dynamic model parameters enable the usage of immediate data to propagate the orbit for a 4-hour interval.

3.1.2.2 DEFINITIONS OF PROTOCOLS FOR DATA APPLICATION

Note.— This section defines the inter-relationships of the data broadcast message parameters. It provides definitions of parameters that are not transmitted, but are used by either or both non-aircraft and aircraft elements, and that define terms applied to determine the navigation solution and its integrity.

Table B-29. Parity checking algorithm

b85, b84, …, b10, b9 are the data bits (position 9 to 85 in the string);

β1, β2, ..., ß8 are the check bits of the Hamming code (positions 1 to 8 in the string);

c_1, c_2, ..., c_7, c_Σ are the checksums generated using the following:

$c_1 = \beta \oplus [\Sigma_i\ b_i]_{mod\ 2}$

i = 9, 10, 12, 13, 15, 17, 19, 20, 22, 24, 26, 28, 30, 32, 34, 35, 37, 39, 41, 43, 45, 47, 49, 51, 53, 55, 57, 59, 61, 63, 65, 66, 68, 70, 72, 74, 76, 78, 80, 82, 84.

$c_2 = \beta_2 \oplus [\Sigma_j\ b_j]_{mod\ 2}$

j = 9, 11, 12, 14, 15, 18, 19, 21, 22, 25, 26, 29, 30, 33, 34, 36, 37, 40, 41, 44, 45, 48, 49, 52, 53, 56, 57, 60, 61, 64, 65, 67, 68, 71, 72, 75, 76, 79, 80, 83, 84.

$c_3 = \beta_3 \oplus [\Sigma_k\ b_k\ ]_{mod\ 2}$

k = 10, 11, 12, 16, 17, 18, 19, 23, 24, 25, 26, 31, 32, 33, 34, 38, 39, 40, 41, 46, 47, 48, 49, 54, 55, 56, 57, 62, 63, 64, 65, 69, 70, 71, 72, 77, 78, 79, 80, 85.

$c_4 = \beta_4 \oplus [\Sigma_l\ b_l]_{mod\ 2}$

l = 13, 14, 15, 16, 17, 18, 19, 27, 28, 29, 30, 31, 32, 33, 34, 42, 43, 44, 45, 46, 47, 48, 49, 58, 59, 60, 61, 62, 63, 64, 65, 73, 74, 75, 76, 77, 78, 79, 80.

$c_5 = \beta_5 \oplus [\Sigma_m\ b_m\ ]_{mod\ 2}$

m = 20, 21, 22, 23, 24, 25, 26, 27, 28, 29, 30, 31, 32, 33, 34, 50, 51, 52, 53, 54, 55, 56, 57, 58, 59, 60, 61, 62, 63, 64, 65, 81, 82, 83, 84, 85.

$c_6 = \beta_6 \oplus [\Sigma_n\ b_n]_{mod\ 2}$

n = 35, 36, 37, 38, 39, 40, 41, 42, 43, 44, 45, 46, 47, 48, 49, 50, 51, 52, 53, 54, 55, 56, 57, 58, 59, 60, 61, 62, 63, 64, 65.

$c_7 = \beta_7 \oplus [\Sigma_p\ b_p]_{mod\ 2}$

p = 66, 67, 68, 69, 70, 71, 72, 73, 74, 75, 76, 77, 78, 79, 80, 81, 82, 83, 84, 85.

$c_\Sigma = [\Sigma\ \beta_q]_{\ mod\ 2} \oplus [\Sigma\ b_r]_{mod\ 2}$

q = 1, 2, 3, 4, 5, 6, 7, 8

r = 9, 10, 11, 12, 13, 14, 15, 16, 17, 18, 19, 20, 21, 22, 23, 24, 25, 26, 27, 28, 29, 30, 31, 32, 33, 34, 35, 36, 37, 38, 39, 40, 41, 42, 43, 44, 45, 46, 47, 48, 49, 50, 51, 52, 53, 54, 55, 56, 57, 58, 59, 60, 61, 62, 63, 64, 65, 66, 67, 68, 69, 70, 71, 72, 73, 74, 75, 76, 77, 78, 79, 80, 81, 82, 83, 84, 85.

3.1.2.2.1 *Parity checking algorithm for FDMA data verification*. The algorithm shown in Table B-29 and as detailed below is used to detect and correct an error of 1 bit within the string and to detect an error of 2 or more bits within a string.

3.1.2.2.1.1 Each string includes the 85 data bits where the 77 MSBs are data chips (b_{85}, b_{84}, …, b_{10}, b_9), and the 8 LSBs are the check bits of Hamming code length of 4 (β_8, β_7, …, β_2, β_1).

3.1.2.2.1.2 To correct 1-bit errors within the string the following checksums are generated: (c_1, c_2, …, c_7), and to detect 2-bit errors (or more-even-number-of-bits errors) a checksum c_Σ is generated, as shown in Table B-29. The following is used for correcting single errors and detecting multiple errors:

a) A string is considered correct if all checksums (c_1, ..., c_7, and c_Σ) are equal to "0", or if only one of the checksums (c_1, ..., c_7) is equal to "1" and c_Σ is equal to "1".

b) If two or more of the checksums (c_1, ..., c_7) are equal to "1" and c_Σ is equal to "1", then character "b_{icor}" is corrected to the opposite character in the following bit position:

$$\text{“}i_{cor}\text{”} = c_7\, c_6\, c_5\, c_4\, c_3\, c_2\, c_1 + 8 - K, \text{ provided that } \text{“}i_{cor}\text{”} \leq 85,$$

where "$c_7\, c_6\, c_5\, c_4\, c_3\, c_2\, c_1$" is a binary number generated from the checksums (c_1, ..., c_7) with c1 being the LSB and c_7 being the MSB. K is the ordinal number of the most significant checksum not equal to "0".

If $i_{cor} > 85$, then there is an odd number of multiple errors, and the data shall be rejected.

c) If at least one of the checksums (c_1, ..., c_7) is equal to "1" and c_Σ is equal to "0", or if all checksums (c_1, ..., c_7) are equal to "0" but c_Σ is equal to "1", then there are multiple errors and the data shall be rejected.

3.1.2.2.2 *SATELLITE CLOCK CORRECTION PARAMETERS*

3.1.2.2.2.1 GLONASS system time shall be determined using FDMA data as:

$$t_{GLONASS} = t_k + \tau_n(t_b) - \gamma_n(t_b)\,(t_k - t_b)$$

where t_k, $\tau_n(t_b)$, $\gamma_n(t_b)$ are parameters described in 3.1.2.1.3.1.

3.1.2.2.2.2 GLONASS system time shall be determined using CDMA data as:

$$t_{GLONASS} = \mathrm{mod}_{86400}\left[T^j_{ST\{signal\}} + \tau^j(t_b) - \Delta t_b \cdot \gamma^j(t_b) - \Delta t_b^2 \cdot \beta^j(t_b)\right]$$

$$\Delta t_b = \frac{T^j_{ST\{signal\}} + \tau^j(t_b) + \tau_c(t_b) - t_b - \left\langle\left\langle \frac{T^j_{ST\{signal\}} + \tau^j(t_b) + \tau_c(t_b) - t_b}{86400} \right\rangle\right\rangle \cdot 86400}{1 + \gamma^j(t_b) - \dot{\tau}_c(t_b)}$$

where

$T^j_{ST\{signal\}}$ is the signal time of received signal from satellite *j* and
$\tau^j(t_b), \gamma^j(t_b), \beta^j(t_b), \tau_c(t_b), \dot{\tau}_c(t_b)$ are parameters transmitted in CDMA signals within string of Types 10, 11 and 12 as shown in Table B-26 and Table B-27.

3.1.2.2.2.3 GLONASS system time offset to National Time Service of Russia (UTC(SU)) shall be determined using FDMA data as:

$$t_{UTC(SU)} = t_{GLONASS} + \tau_c - 03 \text{ hours } 00 \text{ minutes}$$

where

τ_c is a parameter described in 3.1.2.1.3.4 and

03 hours 00 minutes is continuous time shift caused by difference between Moscow time and Greenwich time.

3.1.2.2.2.4 GLONASS system time offset to UTC(SU) shall be determined using CDMA data as:

$$t_{UTC\ (SU)} = \mathrm{mod}_{86400}[t_{GLONASS} + \tau_c(t_b) + \Delta t_b \cdot \dot{\tau}_c(t_b) - 10800]$$

$$\Delta t_b = \frac{t_{GLOSASS} + \tau_c(t_b) - t_b - \left\langle\left\langle \frac{t_{GLONASS} + \tau_c(t_b) - t_b}{86400} \right\rangle\right\rangle \cdot 86400}{1 - \dot{\tau}_c(t_b)}$$

where

$\tau_c(t_b), \dot{\tau}_c(t_b)$, are parameters transmitted in CDMA signals within string of Types 10, 11 and 12 as shown in Table B-26 and Table B-27; and

10 800 seconds is the continuous time shift caused by the difference between Moscow time and Greenwich time.

3.1.2.2.3 *SATELLITE POSITION*

3.1.2.2.3.1 The current satellite centre of mass position shall be defined using ephemeris parameters from GLONASS navigation, as indicated in Table B-16 for GLONASS FDMA signals, in Table B-26 for L1OC and in Table B-27 for L3OC.

3.1.2.2.3.2 Recalculation of ephemeris from instant t_b to instant t_i within the interval ($|\tau_i| = |t_i - t_b| \leq 15$ minutes) is performed using a technique of numeric integration of differential equations describing the motion of the satellites. In the right-hand parts of these equations the accelerations are determined using the gravitational constant μ and the second zonal harmonic of the geopotential J^2_0which defines polar flattening of the earth, and accelerations due to luni-solar perturbation are taken into account. The equations are integrated in the PZ-90 (3.2.5) coordinate system by applying the Runge-Kutta technique of fourth order, as indicated below:

$$\frac{dx}{dt} = Vx$$

$$\frac{dy}{dt} = Vy$$

$$\frac{dz}{dt} = Vz$$

$$\frac{dV_x}{dt} = -\frac{\mu}{r^3}x - \frac{3}{2}J_0^2\frac{\mu a_e^2}{r^5}x\left(1 - \frac{5z^2}{r^2}\right) + \omega^2 x + 2\omega V_y + \ddot{x}$$

$$\frac{dV_y}{dt} = -\frac{\mu}{r^3}y - \frac{3}{2}J_0^2\frac{\mu a_e^2}{r^5}y\left(1 - \frac{5z^2}{r^2}\right) + \omega^2 y - 2\omega V_x + \ddot{y}$$

$$\frac{dV_z}{dt} = -\frac{\mu}{r^3}z - \frac{3}{2}J_0^2\frac{\mu a_e^2}{r^5}z\left(3 - \frac{5z^2}{r^2}\right) + \ddot{z}$$

where

r = $\sqrt{x^2+y^2+z^2}$;
μ = earth's universal gravitational constant (398 600.4418 × 10^9 m^3/s^2);
a_e = major semi-axis (6 378 136 m);
J^2_0 = second zonal harmonic of the geopotential (1 082 625.75 × 10^{-9}); and
ω = earth's rotation rate (7.2921151467 × 10^{-5} radians/s).

Coordinates $x_n(t_b)$, $yn(t_b)$, $z_n(t_b)$, and velocity vector components $\dot{x}_n(t_b) = V_x$, $\dot{y}_n(t_b) = V_y$, $\dot{z}_n(t_b) = V_z$ are initial conditions for the integration. Accelerations due to luni-solar perturbation $\ddot{x}_n(t_b)$, $\ddot{y}_n(t_b)$, $\ddot{z}_n(t_b)$ are constant on the integration interval ±15 minutes.

3.1.2.2.3.3 Recalculation of ephemeris from instant t_b to instant t_i within the interval ($|\tau i| = |t_i - t_b| \leq 4$ hours) for CDMA signals shall be performed as in 3.1.2.2.3.2, except that this model includes additional accelerations modelled by a fourth-degree polynomial to accommodate the extended interval as described below:

$$\frac{dx}{dt} = Vx$$

$$\frac{dy}{dt} = Vy$$

$$\frac{dz}{dt} = Vz$$

$$\frac{dV_x}{dt} = -\frac{\mu}{r^3}x - \frac{3}{2}J_0^2\frac{\mu a_e^2}{r^5}x\left(1 - \frac{5z^2}{r^2}\right) + \omega^2 x + 2\omega V_y + \ddot{x} + a_x$$

$$\frac{dV_y}{dt} = -\frac{\mu}{r^3}y - \frac{3}{2}J_0^2\frac{\mu a_e^2}{r^5}y\left(1 - \frac{5z^2}{r^2}\right) + \omega^2 y - 2\omega V_x + \ddot{y} + a_y$$

$$\frac{dV_z}{dt} = -\frac{\mu}{r^3}z - \frac{3}{2}J_0^2\frac{\mu a_e^2}{r^5}z\left(3 - \frac{5z^2}{r^2}\right) + \ddot{z} + a_z$$

$$a_x = \Delta a_{x0} + a_{x1}(t - t_b) + a_{x2}(t - t_b)^2 + a_{x3}(t - t_b)^3 + a_{x4}(t - t_b)^4$$

$$a_y = \Delta a_{y0} + a_{y1}(t - t_b) + a_{y2}(t - t_b)^2 + a_{y3}(t - t_b)^3 + a_{y4}(t - t_b)^4$$

$$a_z = \Delta a_{z0} + a_{z1}(t - t_b) + a_{z2}(t - t_b)^2 + a_{z3}(t - t_b)^3 + a_{z4}(t - t_b)^4$$

Coordinates, velocity vector components at the time tb, and perturbing accelerations $\ddot{x}, \ddot{y}, \ddot{z}$ shall be transmitted in CDMA signals within string of Types 10, 11 and 12. The long-term dynamic model parameters for the fourth-degree polynomials, accelerations $a_x, a_y,$ and $a_z,$ shall be transmitted in CDMA signals in strings of Types 31 and 32.

3.1.2.2.4 *ALGORITHM FOR DETERMINATION OF SATELLITE ANTENNA PHASE CENTRE POSITION*

3.1.2.2.4.1 For high-precision pseudo-range measurements, an algorithm for computing antenna phase centre position in the PZ-90 coordinate system based on the satellite centre of mass position and data transmitted in CDMA signals within string Type 16 shall be used.

Note.— Additional information concerning a suitable algorithm is given in Appendix R of the GLONASS CDMA ICD General Description.

3.1.2.2.5 *IONOSPHERIC CORRECTION*

3.1.2.2.5.1 The ionospheric correction for a single-frequency receiver shall be defined as:

– for pseudo-ranges, m: $\Delta S_{ion} = 0.40364.\frac{I_e}{f^2}$;

– for velocities, m/s: $\Delta V_{ion} = 0.40364.\frac{\dot{I_e}}{f^2}$,

where

f is the signal carrier frequency, in GHz;

I_e is the total electron content (TEC) integrated along the signal propagation path, 1×10^{16}m^{-2}; and

$\dot{I}_e$ is the rate of change of TEC integrated along the signal propagation path, 1×10^{16} $m^{-2}s^{-1}$.

Note.— Additional information concerning two suitable algorithms for computing TEC integrated along the signal propagation path based on data transmitted within strings of Type 25 is given in Appendix Q of the GLONASS CDMA ICD General Description. The first algorithm is a universal algorithm for terrestrial and space users. It is more complex, accurate, and has wider application. The second algorithm is intended for terrestrial users only. It is easier to implement but it results in larger errors of TEC at less than 30° elevation angles. Residual ionosphere correction errors of the second algorithm do not exceed 4 m (0.95 probability).

3.1.2.3 AIRCRAFT ELEMENTS

3.1.2.3.1 *GLONASS RECEIVER*

3.1.2.3.1.1 *Reserved*.

3.1.2.3.1.2 *Satellite tracking*. The receiver shall provide the capability to continuously track a minimum of four satellites and generate a position solution based upon those measurements.

3.1.2.3.1.3 *Doppler shift*. The receiver shall be able to compensate for dynamic Doppler shift effects on nominal GLONASS signal carrier phase and standard code measurements. The receiver shall compensate for the Doppler shift that is unique to the anticipated application.

3.1.2.3.1.4 *Resistance to interference*. The receiver shall meet the requirements for resistance to interference as specified in 3.7.

3.1.2.3.1.4.1 *Intrasystem interference*. When receiving an FDMA navigation signal with frequency channel k = n, the interference created by a navigation signal with frequency channel number k = n – 1 or k = n + 1 shall not be more than -48 dBc with respect to the minimum specified satellite power at the surface of the earth provided that the satellites transmitting these signals are simultaneously located in user's visibility zone.

Note.— The intrasystem interference is the intercorrelation properties of the ranging pseudo-random signal with regard to frequency division multiple access.

3.1.2.3.1.4.2 For CDMA signals, multiple access interference shall be defined by the intercorrelation properties of ranging codes and will depend on the number of elementary symbols *N* in the periods of these codes. Multiple access interference power in relation to the power of the L1OCd signal shall not exceed the level of –30 dB. Multiple access interference power in relation to the power of the L1OCp signal shall not exceed the level of –36 dB. Multiple access interference power in relation to the power of the L3OC signal shall not exceed the level of –40 dB.

3.1.2.3.1.5 *Application of clock and ephemeris data*. The receiver shall ensure that it is using the correct ephemeris and clock data before providing any position solution.

3.1.2.3.1.6 *Leap second correction*. Upon GLONASS time leap second correction (see 3.1.2.1.3.1, t_b) the GLONASS receiver shall be capable of:

a) generating a smooth and valid series of pseudo-range measurements; and

b) resynchronizing the data string time mark without loss of signal tracking.

3.1.2.3.1.6.1 After GLONASS time leap second correction the GLONASS receiver shall utilize the UTC time as follows:

a) utilize the old (prior to the correction) UTC time together with the old ephemeris (transmitted before 00 hours 00 minutes 00 seconds UTC); and

b) utilize the updated UTC time together with the new ephemeris (transmitted after 00 hours 00 minutes 00 seconds UTC).

Note.— Additional information concerning the specific aspects of receiver operation during scheduled corrections of GLONASS time and Moscow time in the specified situations is given in Appendix E of the GLONASS CDMA ICD General Description.

3.1.2.4 TIME

3.1.2.4.1 For the GLONASS-M satellites, the navigation message shall contain the data necessary to relate UTC(SU) time to UT1. GLONASS time shall be maintained to be within 1 millisecond of UTC(SU) time after correction for the integer number of hours due to GLONASS control segment specific features:

$$| t_{GLONASS} - (\text{UTC} + 03 \text{ hours } 00 \text{ minutes}) | < 1 \text{ ms}$$

The navigation data shall contain the requisite data to relate GLONASS time to UTC time (as maintained by the National Time Service of Russia, UTC (SU)) within 1 microsecond.

Note 1.— The timescales of GLONASS satellites are periodically compared with central synchronizer time. Corrections to the timescales of GLONASS satellites relative to GLONASS time and UTC(SU) time are computed at the GLONASS ground-based control complex and uploaded to the satellites twice per day.

Note 2.— There is no integer-second difference between GLONASS time and UTC time. The GLONASS timescale is periodically corrected to integer number of seconds simultaneously with UTC corrections which are performed according to the Bureau International de l'Heure notification (leap second correction). These corrections are performed at 00 hours 00 minutes 00 seconds UTC time at midnight at the end of a quarter of the year. Upon the GLONASS leap second correction the time mark within navigation message changes its position (in a continuous timescale) to become synchronized with 2 second epochs of corrected UTC timescale. GLONASS users are notified in advance on these planned corrections. For the GLONASS-M satellites, notification of these corrections is provided to users via the navigation message parameter KP.

3.1.2.4.2 Accuracy of mutual satellite timescales synchronization shall be 20 nanoseconds (1 sigma) for GLONASS satellites and 8 nanoseconds (1 sigma) for GLONASS-M satellites.

3.1.2.4.3 The correction to GPS time relative to GLONASS time (or difference between these timescales) broadcast by the GLONASS-M satellites, τ_{GPS}, shall not exceed 30 nanoseconds (1 sigma).

Note.— The accuracy of τ_{GPS} (30 ns) is determined with reference to the GPS SPS coarse acquisition signal and may be refined upon completion of trials of the GLONASS system using GLONASS-M satellites.

3.1.2.4.4 Signal time shall be generated and maintained by an on-board clock based on atomic frequency standard, shall be synchronized with GLONASS time and shall be distributed in radio navigation signals.

Note 1.— Signal time differs from on-board clock time by the group delay value. Thus signal time corrections in string Types 10, 11 and 12 include group delay values.

Note 2.— Additional information concerning signal time is given in the GLONASS CDMA ICD General Description.

3.1.2.4.4.1 Navigation data for any GLONASS CDMA signal shall contain the estimated parameters of the polynomial model for relating signal time broadcast in this signal to GLONASS time as well as for relating a pilot component of this signal to its data component.

3.1.2.4.4.2 When GLONASS time is corrected for ±1 s during scheduled leap second corrections of UTC(SU), simultaneous correction of signal time for all satellites shall be carried out through changing the time stamps of the pulse sequence representing seconds.

Note.— Navigation data provides advance notifications to users of the day and the sign of the correction.

3.1.2.5 COORDINATE SYSTEM

3.1.2.5.1 *PZ-90 (Parameters of common terrestrial ellipsoid and gravitational field of the earth 1990)*. The GLONASS broadcast ephemeris shall describe a position of transmitting antenna phase centre of a given satellite in the PZ-90 earth-centred earth-fixed reference frame.

3.1.2.5.2 *CONVERSION BETWEEN PZ-90 AND WGS-84*

3.1.2.5.2.1 **Recommendation.**— *The following conversion parameters should be used to obtain position coordinates in WGS-84 (version G1674) from position coordinates in PZ-90 (Version PZ-90.11):*

$$\begin{bmatrix} X \\ Y \\ Z \end{bmatrix}_{WGS-84} = \begin{bmatrix} 1 & 0.0097 \times 10^{-9} & 0.2036 \times 10^{-9} \\ -0.0097 \times 10^{-9} & 1 & 0.0921 \times 10^{-9} \\ -0.2036 \times 10^{-9} & 0.0921 \times 10^{-9} & 1 \end{bmatrix} \times \begin{bmatrix} X \\ Y \\ Z \end{bmatrix}_{PZ-90} + \begin{bmatrix} 0.003 \\ 0.001 \\ 0 \end{bmatrix}$$

Note 1.— X, Y and Z are expressed in metres. The difference between versions WGS-84 (G1674) and PZ-90 (PZ-90.11) is not significant with respect to operational requirements.

Note 2.— Guidance material on conversion between PZ-90 and WGS-84 is provided in Attachment D, 4.1.2.9.3.

3.1.3 Galileo Open Service (Galileo OS)

3.1.3.1. NON-AIRCRAFT ELEMENTS

3.1.3.1.1 GALILEO RF CHARACTERISTICS

3.1.3.1.1.1 *E1 and E5 common requirements*

3.1.3.1.1.1.1 *Carrier phase noise*. The carrier phase noise spectral density of the unmodulated carrier on E5 and E1 shall be such that a second-order phase locked loop of 10 Hz one-sided noise bandwidth is able to track the carrier to an accuracy of 0.04 radian root mean square (RMS).

3.1.3.1.1.1.2 *Spurious emissions*. In-band spurious emissions shall be at least 35 dB below the unmodulated E1 and E5 carriers over the allocated channel bandwidth.

3.1.3.1.1.1.3 *Correlation loss*. The loss in the recovered signal power due to imperfections in the signal modulation and waveform distortion shall not exceed 0.6 dB for each signal (E1, E5a and E5b).

Note.— The loss in signal power is the difference between the broadcast power in the specified bandwidth and the signal power recovered by a noise-free, loss-free receiver with 1-chip correlator spacing and the same bandwidth.

3.1.3.1.1.1.4 *Code/data coherence*. The edge of each data symbol shall be aligned with the edge of the corresponding ranging code chip. The start of the periodic ranging code shall be aligned with the start of a data symbol. The edge of each secondary code chip shall be aligned with the edge of a primary code chip. The start of a primary code chip shall be aligned with the start of a secondary code chip.

3.1.3.1.1.2 *E1 RF characteristics*

3.1.3.1.1.2.1 *E1 signal components*. The E1 signal shall comprise two signal components: E1-B navigation data component with a navigation data symbol rate of 250 symbols per second and E1-C pilot component.

3.1.3.1.1.2.2 *E1 signal power split*. The E1 signal power shall be equally split between the E1-B and E1-C signal components.

3.1.3.1.1.2.3 *E1-B ranging code (C_{E1-B})*. The E1-B ranging code shall be a 1.023 megachips per second ranging code repeated every 4 milliseconds, derived from a primary ranging code of 4 092 chips.

Note.— Additional information concerning the E1-B ranging codes is given in Galileo OS SIS ICD, Chapter 3 and Annex C.

3.1.3.1.1.2.4 *E1-C ranging code (C_{E1-C})*. The E1-C ranging code shall be a 1.023 megachips per second ranging code repeated every 100 milliseconds, derived from the Modulo-2 addition of a primary ranging code of 4 092 chips and a secondary code of 25 chips.

Note.— Additional information concerning the E1-C ranging codes is given in Galileo OS SIS ICD, Chapter 3 and Annex C.

3.1.3.1.1.2.5 *E1-B data component generation*. The E1-B data component shall be generated from the E1 navigation data stream ($D_{E1\text{-}B}$) and the E1-B ranging code ($C_{E1\text{-}B}$), modulated with two in-phase CBOC subcarriers of 1.023 MHz and 6.138 MHz, respectively, as shown in Figure B-13.

Note.— The subcarrier-free component of the E1 navigation data component – that is, before CBOC modulation – is denoted as $e_{E1\text{-}B}$. Additional information concerning $e_{E1\text{-}B}$ generation is given in Galileo OS SIS ICD, 2.3.3.

3.1.3.1.1.2.6 E1-C pilot component generation. The E1-C pilot component shall be generated from the E1-C ranging code ($C_{E1\text{-}C}$) modulated with two anti-phase CBOC subcarriers of 1.023 MHz and 6.138 MHz, respectively, as shown in Figure B-13.

Note.— The subcarrier-free component of the E1 pilot component – that is, before CBOC modulation – is denoted as $e_{E1\text{-}C}$. Additional information concerning $e_{E1\text{-}C}$ generation is given in Galileo OS SIS ICD, 2.3.3.

3.1.3.1.1.2.7 *E1 signal modulation*. The E1-B/C composite binary signal shall be generated from the CBOC modulation of the binary signal components, $e_{E1\text{-}B}$ and $e_{E1\text{-}C}$, and the subcarriers, as illustrated in Figure B-13.

Note.— Additional information concerning E1-B/C generation is given in Galileo OS SIS ICD, 2.3.3.

3.1.3.1.1.3 *E5a and E5b RF characteristics*

3.1.3.1.1.3.1 *E5a signal components*. The E5a signal shall comprise two signal components: E5a-I navigation data component with a navigation data symbol rate of 50 symbols per second and E5a-Q pilot component.

3.1.3.1.1.3.2 *E5a signal power split*. The E5a signal power shall be equally split between the E5a-I and E5a-Q components.

3.1.3.1.1.3.3 *E5a-I ranging code ($C_{E5a\text{-}I}$)*. The E5a-I ranging code sequence shall be a 10.230 megachips per second ranging code repeated every 20 milliseconds, derived from the Modulo-2 addition of a primary ranging code of 10 230 chips and a secondary code of 20 chips.

Note.— Additional information concerning E5a-I ranging codes is given in Galileo OS SIS ICD, Chapter 3 and Annex C.

3.1.3.1.1.3.4 *E5a-Q ranging code ($C_{E5a\text{-}Q}$)*. The E5a-Q ranging code shall be a 10.230 megachips per second ranging code repeated every 100 milliseconds, derived from the Modulo-2 addition of a primary ranging code of 10 230 chips and a secondary code of 100 chips.

Note.— Additional information concerning E5a-Q ranging codes is given in Galileo OS SIS ICD, Chapter 3 and Annex C.

3.1.3.1.1.3.5 *E5a-I data component generation*. The E5a data component shall be generated from the E5a navigation data stream ($D_{E5a\text{-}I}$) and the E5a-I ranging code ($C_{E5a\text{-}I}$).

Note.— The subcarrier-free component of the E5a navigation data component – that is, before AltBOC modulation – is denoted as $e_{E5a\text{-}I}$.

3.1.3.1.1.3.6 *E5a-Q pilot component generation*. The E5a pilot component shall be generated from the E5a-Q ranging code ($C_{E5a\text{-}Q}$).

Note.— The subcarrier-free component of the E5a pilot component – that is, before AltBOC modulation – is denoted as $e_{E5a\text{-}Q}$.

3.1.3.1.1.3.7 *E5b signal components*. The E5b signal shall comprise two signal components: E5b-I navigation data component with a navigation data symbol rate of 250 symbols per second and E5b-Q pilot component.

3.1.3.1.1.3.8 *E5b signal power split*. The E5b signal power shall be equally split between the E5b-I and E5b-Q components.

3.1.3.1.1.3.9 *E5b-I ranging code (C_{E5b-I})*. The E5b-I ranging code shall be a 10.230 megachips per second ranging code repeated every 4 milliseconds, derived from the Modulo-2 addition of a primary ranging code of 10 230 chips and a secondary code of 4 chips.

Note.— Additional information concerning E5b-I ranging codes is given in Galileo OS SIS ICD, Chapter 3 and Annex C.

3.1.3.1.1.3.10 *E5b-Q Ranging code (C_{E5b-Q})*. The E5b-Q ranging code shall be a 10.230 megachips per second ranging code repeated every 100 milliseconds, derived from the Modulo-2 addition of a primary ranging code of 10 230 chips and a secondary code of 100 chips.

Note.— Additional information concerning E5b-Q ranging codes is given in Galileo OS SIS ICD, Chapter 3 and Annex C.

3.1.3.1.1.3.11 *E5b-I data component generation*. The E5b data component shall be generated from the E5b navigation data stream (D_{E5b-I}) and the ranging code (C_{E5b-I}).

Note.— The subcarrier-free component of the E5b navigation data component – that is, before AltBOC modulation – is denoted as e_{E5b-I}.

3.1.3.1.1.3.12 *E5b-Q pilot component generation*. The E5b pilot component shall be generated from the ranging code (C_{E5b-Q}).

Note.— The subcarrier-free component of the E5b pilot component – that is, before AltBOC modulation – is denoted as e_{E5b-Q}.

3.1.3.1.1.3.13 *E5 signal modulation*. The wideband E5 signal shall be generated with the AltBOC modulation of side-band subcarrier of 15.345 MHz (15 × 1.023 MHz) with the binary signal components e_{E5a-I}, e_{E5a-Q}, e_{E5b-I} and e_{E5b-Q}, as illustrated in Figure B-14.

Note 1.— E5a and E5b signals can be processed independently by the user receiver as though they were two separate QPSK signals with a carrier frequency of 1176.45 MHz and 1207.14 MHz, respectively.

Note 2.— Additional information concerning E5 generation is given in Galileo OS SIS ICD, 2.3.1.

3.1.3.1.1.4 *Code assignments to satellites*

3.1.3.1.1.4.1 *Primary ranging code assignment to satellites*. The E5a-I, E5a-Q, E1-B and E1-C primary code number n shall be allocated to the space vehicle IDs (SVID) number n (with n=1 to 36).

3.1.3.1.1.4.2 Secondary ranging code assignment to satellites. The E5a-Q secondary code shall be assigned according to the SVID number n (with n=1 to 36). E5a-I and E1-C secondary codes shall be constant regardless of the SVID.

3.1.3.1.2 *DATA STRUCTURE*

Note.— Additional information concerning the data structure is given in Galileo OS SIS ICD.

3.1.3.1.2.1 *E5a-I message (F/NAV) characteristics*

3.1.3.1.2.1.1 The E5a-I message shall be transmitted as a sequence of frames as indicated in Figure B-15. The period of each frame shall be 600 seconds. Each frame shall consist of 12 subframes of period 50 seconds per subframe. Each subframe shall consist of five pages of period 10 seconds per page.

3.1.3.1.2.1.2 *Page structure*. Each page structure shall contain the following elements structured as indicated in Table B-30:

- 12 synchronization block symbols
- 488 interleaved message block symbols

Table B-30. F/NAV page layout

Sync.	*F/NAV symbols*
12	488

Total (symbols)
500

F/NAV word (bits)			*Tail (bits)*
Page type	Nav. data	CRC	
6	208	24	6

Total (bits)
244

3.1.3.1.2.1.3 *Synchronization block*. The first element of each page shall be a 12-symbol synchronization sequence. The synchronization sequence shall be “101101110000” with the MSB transmitted first, and it shall be added to the beginning of the 488 interleaved message block symbols field after the interleaving procedure described in paragraph 3.1.3.1.2.1.6.

3.1.3.1.2.1.4 F*/NAV message word*. The message word shall contain 244 bits consisting of a 6-bit page type, a 208-bit data field, a 24-bit CRC and a 6-bit tail field. The 6-bit tail field shall be “000000”.

Note.— Additional information concerning the message words is given in Galileo OS SIS ICD.

3.1.3.1.2.1.5 *F/NAV FEC encoding*. The 25-bit-per-second data stream shall be encoded at a rate of two symbols per bit using a convolution code with a constraint length of seven to yield 50 symbols per second. The convolution encoder logic arrangement shall be as illustrated in Figure B-16 with the G1 output selected for the first half of each 40-millisecond data bit period resulting in 488 symbols per page where S1 is the first symbol and S488 is the last symbol.

3.1.3.1.2.1.6 *E5a-I interleaving procedure*. The E5a-I message block symbols shall be interleaved using a 61-column, 8-row matrix, where each entry is one symbol. The message block symbols shall be written into each column and ordered for transmission, row by row, starting at the upper left corner of the matrix as indicated in Table B-31.

Table B-31. E5a-I interleaver matrix

Columns→ Rows ↓	C_1	C_2	C_3	…	C_{60}	C_{61}
R_1	S_1	S_9	S_{17}	…	S_{473}	S_{481}
R_2	S_2	S_{10}	S_{18}	…	S_{474}	S_{482}
R_3	S_3	S_{11}	S_{19}	…	S_{475}	S_{483}
…	…	…	…	…	…	…
R_7	S_7	S_{15}	S_{23}	…	S_{479}	S_{487}
R_8	S_8	S_{16}	S_{24}	…	S_{480}	S_{488}

3.1.3.1.2.2 *E1-B message (I/NAV) characteristics*

3.1.3.1.2.2.1 The E1-B message shall be transmitted as a sequence of frames as indicated in Figure B-17. The period of each frame shall be 720 seconds. Each frame shall consist of 24 subframes of period 30 seconds per subframe. Each subframe consist of 15 nominal pages of period 2 seconds per page. Each page shall consist of two subpages each of period one second.

Note 1.— The two subpages in a page are known as the even page and the odd page.

Note 2.— I/NAV message structure is indicated in Figure B-17.

3.1.3.1.2.2.2 *Page type*. There shall be two types of pages, a nominal page and an alert page. The nominal page shall contain the nominal data word.

Note.— The alert page is reserved for future applications.

3.1.3.1.2.2.3 *Nominal page*. A nominal page shall consist of two parts (even and odd) transmitted sequentially over the same frequency and structured as indicated in Table B-33. The nominal page shall contain 240 bits so that the first 120 bits shall be in the even nominal subpage, and the second 120 bits shall be in the odd nominal subpage.

3.1.3.1.2.2.4 *Nominal data word*. The nominal E1-B data word shall contain 128 bits consisting of a 6-bit word type and a 122-bit data field.

3.1.3.1.2.2.5 *Subpage structure*. Each subpage structure shall contain the following elements, structured as indicated in Table B-32:

a) 10 synchronization block symbols; and

b) 240 interleaved message block symbols.

Table B-32. I/NAV subpage layout

Sync.	*I/NAV subpage (even or odd) symbols*	*Total (symbols)*
10	240	250

I/NAV subpage (even or odd) bits	*Tail (bits)*	*Total (bits)*
114	6	120

3.1.3.1.2.2.6 *Synchronization block*. The first element of each subpage shall be a 10-symbol synchronization sequence. The synchronization sequence shall be "0101100000", with the MSB transmitted first, and shall be added to the beginning of the 240 interleaved message block symbols field after the interleaving procedure described in paragraph 3.1.3.1.2.2.10.

3.1.3.1.2.2.7 *Even subpage*. The even subpage shall contain a bit denoting which part (even or odd) of the subpage is being transmitted, a type bit to indicate that this is a nominal page, the first 112 bits of the nominal data word and a 6-bit tail field, as indicated in Table B-33. The tail field shall be "000000".

3.1.3.1.2.2.8 *Odd subpage*. The odd subpage shall contain a bit denoting which part (even or odd) of the subpage is being transmitted, a type bit to indicate that this is a nominal page, the last 16 bits of the nominal data word, a 40-bit "reserved 1" field, 22 bits for search and rescue (SAR) data, a 2-bit spare field, a 24-bit CRC, an 8-bit "reserved 2" field and a 6-bit tail field, as indicated in Table B-33. The tail field shall be "000000".

Note.— Galileo provides enhanced distress localization and call features for the provision of a SAR service interoperable with the COSPAS-SARSAT system. Galileo SAR service is out of the scope of Annex 10.

Table B-33. I/NAV nominal page with bits allocation

E1-B

Even/odd=1	*Page Type=0*	*Data word (2/2)*	*Reserved 1*	*SAR*	*Spare*	*CRC*	*Reserved 2*	*Tail*	*Total (bits)*
1	1	16	40	22	2	24	8	6	120

Even/odd=0	*Page Type=0*	*Data word (1/2)*	*Tail*	*Total (bits)*
1	1	112	6	120

Note 1.— Even/odd field (1 bit) indicates the part of the page (0=even/1=odd) that is broadcast.

Note 2.— Page type field (1 bit) equal to 0 indicates the nominal page type.

Note 3.— Data field consists of a nominal data word (described in 3.1.3.1.2.2.4) of 128 bits (comprising 112 bits of data (1/2) and 16 bits of data (2/2)).

3.1.3.1.2.2.9 *I/NAV FEC encoding*. The 125-bit-per-second data in the even and odd subpages shall be encoded at a rate of two symbols per bit using a convolutional code with a constraint length of seven to yield 250 symbols per second. The convolutional encoder logic arrangement shall be as illustrated in Figure B-18 with the G1 output selected for the first half of each 8-millisecond data bit period resulting in 240 symbols per page, where S1 is the first symbol and S240 is the last symbol.

3.1.3.1.2.2.10 *E1-B interleaving procedure*. The E1-B message block symbols shall be interleaved using a 30 column by an eight-row matrix, where each entry is one symbol. The message block symbols shall be written into each column and ordered for transmission row by row starting at the upper left corner of the matrix, as indicated in Table B-34.

Table B-34. E1-B interleaver matrix

Columns→ Rows ↓	C_1	C_2	C_3	…	C_{29}	C_{30}
R_1	S_1	S_9	S_{17}	…	S_{225}	S_{233}
R_2	S_2	S_{10}	S_{18}	…	S_{226}	S_{234}
R_3	S_3	S_{11}	S_{19}	…	S_{227}	S_{235}
…	…	…	…	…	…	…
R_7	S_7	S_{15}	S_{23}	…	S_{231}	S_{239}
R_8	S_8	S_{16}	S_{24}	…	S_{232}	S_{240}

3.1.3.1.2.2.11 *Transmission sequence of nominal pages on E1*. The pages shall be transmitted on E1-B such that the even subpage of any word shall be transmitted before the odd subpage of the same word.

3.1.3.1.3 *DATA CONTENT*

Note 1.— Additional information concerning Galileo OS navigation data content and parameters is given in Galileo OS SIS ICD, Chapters 4 and 5.

Note 2.— Galileo ISM is defined in the Galileo OS SIS ICD Issue 2.1.

3.1.3.1.3.1 The contents of F/NAV E5a-I page types shall be according to Table B-35.

Note 1.— The odd numbered subframes contain page type 5 and the even numbered subframes contain page type 6. This allows transmission of the almanacs for three satellites within two successive subframes (100 seconds).

Note 2.— The parameter k is a designator for "satellite number 1", k+1 is a designator for "satellite number 2", etc. It is not a navigation data parameter. k is set by the Galileo control system. The complete F/NAV frame layout (12 subframes) can transmit the almanacs for 18 satellites, sequenced as indicated in Galileo OS SIS ICD, 4.2.3.

Note 3.— Additional information concerning the bit allocation of the different F/NAV page types is given in Galileo OS SIS ICD, 4.2.4.

Table B-35. F/NAV E5a-I page types content

Page type		*Page content*
Odd subframe	1	IODnav, SVID, clock correction, SIS accuracy index (SISA), ionospheric correction, broadcast group delay (BGD), signal health status (SHS), Galileo system time (GST) and data validity status (DVS)
	2	IODnav, ephemeris (1/3) and GST
	3	IODnav, ephemeris (2/3) and GST
	4	IODnav, ephemeris (3/3), GST-UTC conversion, GST-GPS conversion and time-of-week (TOW)
	5	IODa, almanac week number, almanac reference time, almanac for satellite k+3(n-1)/2 and almanac for satellite (k+1)+3(n-1)/2 part 1; where n is the number of the subframe
Even subframe	1	IODnav, SVID, clock correction, SISA, ionospheric correction, BGD, SHS, GST and DVS
	2	IODnav, ephemeris (1/3) and GST
	3	IODnav, ephemeris (2/3) and GST
	4	IODnav, ephemeris (3/3), GST-UTC conversion, GST-GPS conversion and TOW
	6	IODa, almanac for satellite (k+1)+3(n-2)/2 part 2 and almanac for satellite (k+2)+3(n-2)/2; where n is the number of the subframe

3.1.3.1.3.2 The contents of I/NAV E1-B word types shall be according to Table B-36.

Note 1.— Additional information concerning I/NAV nominal subframe layout is given in Galileo OS SIS ICD, 4.3.3.

Note 2.— The parameter k changes every two subframes (i.e. subframes 1 and 2 have the same k, subframes 3 and 4 have the next, etc.). The complete I/NAV frame layout (24 subframes) can transmit the almanacs for 36 satellites, sequenced as indicated in Galileo OS SIS ICD, 4.3.4.

Note 3.— Additional information concerning the bit allocations of the different I/NAV word types is given in Galileo OS SIS ICD, 4.3.5.

Table B-36. I/NAV E1-B word types content

Word type	*Word content*
0	Spare word
1	IODnav and ephemeris (1/4)
2	IODnav and ephemeris (2/4)
3	IODnav and ephemeris (3/4)
4	IODnav, SVID, ephemeris (4/4) and clock correction
5	Ionospheric correction, BGD, SHS, GST and DVS
6	GST-UTC conversion and TOW
7	IODa, almanac for satellite k (part 1), almanac reference time and almanac reference week number
8	IODa, almanac for satellite k (part 2) and satellite k+1 (part 1)
9	IODa, almanac reference time, almanac reference week number, almanac for satellite k+1 (part 2) and satellite k+2 (part 1)
10	IODa, almanac for satellite k+2 (part 2) and GST-GPS conversion parameters
16	Reduced clock and ephemeris data (CED) parameters*
17, 18, 19, 20	FEC2 Reed-Solomon for clock and ephemeris data (CED)*
22	Integrity support message (ISM)**

**Note 1.— Receivers are not required to process this word type for GNSS air navigation applications.*

***Note 2.— Galileo ISM is defined in the Galileo OS SIS ICD Issue 2.1 and it contains ISD information supporting ARAIM as described in 3.4.1.*

3.1.3.1.3.3 Ephemeris parameters shall be provided in both I/NAV and F/NAV messages transmitted by each Galileo satellite. A single ephemeris shall be applicable to all signals of a specific satellite.

Note.— The ephemeris is computed with respect to the antenna apparent phase centre common to every frequency.

3.1.3.1.3.4 The Galileo OS SIS status shall take one of the following three values:

- SIS “healthy”: the SIS is expected to meet the minimum performance requirements.
- SIS “unhealthy”: the SIS is out of service or under test.
- SIS “marginal”: the SIS is in neither of the two previous states.

3.1.3.1.3.4.1 The status of the SIS shall be encoded within the navigation message through three SIS status flags: the signal health status (SHS) flag, the data validity status (DVS) flag and the SIS accuracy index (SISA).

Note.— Additional information concerning the position of the Galileo SIS status flags within the navigation message is given in Galileo OS SIS ICD, 5.1.9.3 and 5.1.12.

3.1.3.1.3.4.2 *SISA*. The SISA shall be encoded as shown in Table B-37.

Table B-37. SISA index

SISA	*SIS accuracy value (m)*
0 to 49	0 m to 0.49 m with 1 cm resolution
50 to 74	0.50 m to 0.98 m with 2 cm resolution
75 to 99	1.00 m to 1.96 m with 4 cm resolution
100 to 125	2.00 m to 6.00 m with 16 cm resolution
126 to 254	Spare
255	No Accuracy Prediction Available (NAPA)

3.1.3.1.3.4.3 SISA shall be coded as shown in Table B-38.

Table B-38. SISA parameters

Parameter	*Definition*	*BITS*	*Scale factor*	*Units*
SISA (E1, E5a)	SIS accuracy index for dual-frequency E1-E5a	8	N/A	Dimensionless
SISA (E1, E5b)	SIS accuracy index for dual-frequency E1-E5b	8	N/A	Dimensionless

3.1.3.1.3.4.4 *Signal health status (SHS)*. The SHS index shall be encoded according to the values stated in Table B-39.

Table B-39. Signal health status index

SHS index	*Signal status definition*
0	Signal OK
1	Signal out of service
2	Signal will be out of service
3	Signal in test mode

3.1.3.1.3.4.5 *Data validity status (DVS)*. The DVS index shall be encoded according to the values in Table B-40.

Table B-40. Data validity status index

Data validity status index	*Signal status definition*
0	Navigation data valid (NDV)
1	Working without guarantee (WWG)

3.1.3.1.3.4.6 The mapping between the values of the SIS status flags shall be as presented in Table B-41.

Table B-41. Galileo OS SIS status vs SIS status flags

SIS status	*Dummy message*	*SIS flags*		
		SHS	*DVS*	*SISA*
Healthy	NO	Ok	NDV	Not NAPA
Unhealthy	NO	Out of service	Any value	Any value
	NO	In test	Any value	Any value
	YES	N/A	N/A	N/A
Marginal	NO	Ok	WWG	Any value
	NO	Ok	Any value	NAPA
	NO	Will be out of service	Any value	Any value

Note.— Additional information concerning Galileo flags is given in the European GNSS (Galileo) Open Service Definition Document (Issue 1.1), dated May 2019 (hereinafter referred to as "Galileo OS SDD").

3.1.3.1.3.5 *Almanac*. F/NAV and I/NAV messages shall contain the almanac data for a constellation of up to 36 satellites. The almanac data shall be a reduced-precision subset of the clock and ephemeris parameters of the active Galileo satellites in orbit. Also, a predicted satellite health status shall be provided for each of these satellites, giving indications on the satellite's signal components health and navigation data health.

3.1.3.1.3.6 *Dummy messages*. If no valid F/NAV or I/NAV data can be transmitted, then the satellite shall transmit a dummy page with a message ID of 63 in the respective F/NAV or I/NAV signals.

Note.— Additional information concerning the dummy page is given in Galileo OS SIS ICD, 4.2.5 and 4.3.6.

3.1.3.1.3.7 *Issue of data (IOD)*. The Galileo satellite shall broadcast the navigation parameters in data sets. Every set of navigation data broadcast by a Galileo satellite shall be identified by an IOD value.

Note.— Two independent IODs are defined for the ephemeris, satellite clock correction parameters and SISA ("IODnav") and the almanacs ("IODa").

3.1.3.1.3.7.1 The IODnav value broadcast by a Galileo satellite in a set of navigation data (ephemeris and clock corrections) shall be unique with respect to any other IODnav broadcast by the same Galileo satellite in the previous 240 minutes.

3.1.3.1.3.8 *Navigation data validity time*. In nominal operations, each navigation message data set shall be superseded before its expiration at four hours by the broadcast of a new navigation message data set.

Note.— The nominal period of ephemeris and clock corrections update ranges from 10 minutes to three hours.

3.1.3.1.3.9 *Galileo time of week (TOW)*. The TOW shall cover an entire week from 0 to 604 799 seconds and shall be reset to zero at the end of each week.

Note.— The TOW is defined as the number of seconds that have occurred since the transition from the previous week.

3.1.3.1.3.10 *Galileo week number (WN)*. The WN shall consist of 12 bits, which covers 4 096 weeks. The counter shall be reset to zero to cover an additional period Modulo 4 096.

Note.— The WN is an integer counter that gives the sequential week number from the GST start epoch.

3.1.3.2 *DEFINITIONS OF PROTOCOLS FOR DATA APPLICATION*

3.1.3.2.1 *Parity check algorithm*. For the F/NAV and the I/NAV data, a CRC of 24 bits shall be generated from the following generator polynomial G(X):

$$G(X) = (1 + X)P(X)$$

where

$$P(X) = X^{23} + X^{17} + X^{13}+X^{12}+X^{11} + X^{9} + X^{8}+X^{7}+X^{5}+X^{3} + 1$$

Note.— The CRC code is calculated in accordance with 3.9 of this Appendix.

3.1.3.2.1.1 The F/NAV CRC information field, *M(X)*, shall be computed using the equation:

$$M(X) = \sum_{1}^{214} m_i X^{214-i} = m_1 X^{213} + m_2 X^{212} + \cdots + m_{213} X + m_{214}$$

M(X) shall be formed from the 6-bit E5a-I page type identifier and the 208-bit data field. Bits shall be arranged in the order transmitted from the Galileo satellite, such that m1 corresponds to the first transmitted bit of the page type identifier, and m_{214} corresponds to bit 208 of the data field.

3.1.3.2.1.2 The I/NAV nominal page CRC information field, *M(X)*, shall be computed using the equation:

$M(X) = \sum_{1}^{113} m_{e,i+1} X^{194-i} + \sum_{1}^{81} m_{o,i+1} X^{81-i} = m_{e,2} X^{193} + m_{e,3} X^{192} + \cdots + m_{e,113} X^{82} + m_{e,114} X^{81} + m_{o,2} X^{80} + m_{o,3} X^{79} + \ldots + m_{o,81} X + m_{o,82}$

M(x) shall be formed from the even (e)/odd (0) fields, page type fields, data word fields (1/2 and 2/2), reserved 1 field, SAR (on E1-B only) and spare fields. In nominal mode the CRC shall be computed for the even and odd subpages of the same frequency and shall always be broadcast in the odd subpage.

3.1.3.2.2 *Satellite clock correction parameters*. The predicted offset of the physical satellite signal time of transmission (TOT) relative to the satellite signal TOT in GST shall be computed for the dual-frequency signal combination using the following formula:

$$TOT_c(X) = TOT_m(X) - \Delta t_{SV}(X)$$

where

- $(X)=(f_1,f_2)$ is the dual-frequency combination f_1 and f_2 used for the clock model;
- $TOT_C(X)$ is the corrected satellite TOT in GST for the signal combination X;
- $TOT_m(X)$ is the physical satellite TOT for the signal combination X retrieved through pseudo-range measurements; and

- $\Delta t_{SV}(X)$ is the satellite time correction for the signal combination X computed by means of the time correction data retrieved from the navigation message, as follows:

$$\Delta t_{SV}(X) = a_{f0}(X) + a_{f1}(X)[t - t_{0C}(X)] + a_{f2}(X)[t - t_{0C}(X)]^2 + \Delta t_r$$

where

- $a_{f0}(X)$, $a_{f1}(X)$, $a_{f2}(X)$ and $t_{0c}(X)$ are parameters transmitted in F/NAV signals page Type 1 and I/NAV signals word Type 4 as indicated in 3.1.3.1.3;

- $t_{0c}(X)$ is the reference time for the clock correction;

- t is the GST time in seconds; and

- Δt_r, expressed in seconds, is a relativistic correction term, given by $\Delta t_r = F\, e\, A^{1/2} \sin(E)$ where the orbital parameters (e, $A^{1/2}$) are transmitted in F/NAV signals page Type 2 and I/NAV signals word Type 1 as indicated in 3.1.3.1.3, E is the calculated eccentric anomaly and $F = -2\mu^{1/2}/c^2 = -4.442807309 \times 10^{-10}$ s/m$^{1/2}$.

3.1.3.2.2.1 A single-frequency user receiver processing pseudo-ranges from the frequency f_1 shall apply the following correction to the satellite clock correction Δt_{SV} defined in paragraph 3.1.3.2.2:

$$\Delta t_{SV}(f_1) = \Delta t_{SV}(f_1, f_2) - BGD(f_1, f_2)$$

where

$BGD(f_1,f_2)$ is the broadcast group delay transmitted in F/NAV signals page Type 1 and I/NAV signals word Type 5 as indicated in 3.1.3.1.3 and defined as follows:

$$BGD(f_1, f_2) = \frac{TR_1 - TR_2}{1 - \left(\frac{f_1}{f_2}\right)^2}$$

where

- f_1 and f_2 denote the carrier frequencies of E1 and E5a, respectively; and

- TR_1 and TR_2 are the group delays of the signals whose carrier frequencies are respectively f_1 and f_2.

3.1.3.2.2.2 A single-frequency user receiver processing pseudo-ranges from the frequency f_2 shall apply the following correction to the satellite clock correction Δt_{SV} defined in paragraph 3.1.3.2.2:

$$\Delta t_{SV}(f_2) = \Delta t_{SV}(f_1, f_2) - \left(\frac{f_1}{f_2}\right)^2 BGD(f_1, f_2)$$

3.1.3.2.3 *GST-UTC conversion algorithm and parameters*. The UTC time t_{UTC} shall be computed through three different cases depending on the epoch of a possible leap second adjustment (scheduled future or recent past) given by the day number (DN), the day at the end of which the leap second becomes effective, and the week number (WN_{LSF}) to which DN is referenced. "Day one" of DN shall be the first day relative to the end/start of week and the WN_{LSF} value shall consist of eight bits, which are a Modulo 256 binary representation of the Galileo week number to which the DN is referenced. The following three cases shall apply:

Case A:

Whenever the leap second adjustment time indicated by WN_{LSF} and DN is not in the past (relative to the user's present time), and the user's present time does not fall in the time span which starts six hours prior to the effective time, and ends six hours after the effective time, t_{UTC} shall be computed as follows:

$$t_{UTC} = (t_E - \Delta t_{UTC})[\text{Modulo } 86400]$$

where

$$\Delta t_{UTC} = \Delta t_{LS} + A_0 + A_1(t_E - t_{0t} + 604800(WN - WN_{0t}))$$

Case B:

Whenever the user's current time falls within the time span of six hours prior to the leap second adjustment time to six hours after the adjustment time, t_{UTC} shall be computed as follows (Δt_{UTC} as defined in Case A):

$$t_{UTC} = W[\text{Modulo } (86400 + \Delta t_{LSF} - \Delta t_{LS})]$$

where

$$W = (t_E - \Delta t_{UTC} - 43200)[\text{Modulo } 86400] + 43200$$

Case C:

Whenever the leap second adjustment time is in the "past" (relative to the user's current time), and the user's present time does not fall in the time span which starts six hours prior to the leap second adjustment time, and ends six hours after the adjustment time, t_{UTC} shall be computed as follows:

$$t_{UTC} = (t_E - \Delta t_{UTC})[\text{Modulo } 86400]$$

where

$$\Delta t_{UTC} = \Delta t_{LSF} + A_0 + A_1(t_E - t_{0t} + 604800(WN - WN_{0t}))$$

- A_0, A_1, Δt_{LS}, t_{0t}, WN_{0t}, WN_{LSF}, DN and Δt_{LSF} are GST to UTC time conversion parameters transmitted in F/NAV signals page Type 4 and I/NAV signals word Type 6 as indicated in 3.1.3.1.3;
- t_E is the GST as estimated by the user through its GST determination algorithm; and
- WN is the week number to which t_E is referenced.

3.1.3.2.4 *Satellite position*. The Earth-Centred, Earth-Fixed (ECEF) coordinates of the satellite antenna phase centre position at GST time t shall be computed using the following equations:

$x = x'\cos(\Omega) - y'\cos(i)\sin(\Omega)$

$y = x'\sin(\Omega) + y'\cos(i)\cos(\Omega)$

$z = y'\sin(i)$

where

$\Omega = \Omega_0 + (\dot{\Omega} - \omega_E)t_k - \omega_E t_{0e}$	corrected longitude of ascending node
$x' = r \cos u$	position in orbital plane
$y' = r \sin u$	position in orbital plane
$i = i_0 + \delta i + \frac{di}{dt} t_k$	corrected inclination
$r = A(1 - e \cos E) + \delta r$	corrected radius
$u = \Phi + \delta u$	corrected argument of latitude
$A = (A^{1/2})^2$	semi-major axis
$\delta r = C_{rs} \sin 2\Phi + C_{rc} \cos 2\Phi$	radius correction
$\delta u = C_{us} \sin 2\Phi + C_{uc} \cos 2\Phi$	argument of latitude correction
$\delta i = C_{is} \sin 2\Phi + C_{ic} \cos 2\Phi$	inclination correction
$\Phi = v + \omega$	argument of latitude
$v = \tan^{-1}\{\sin v / \cos v\}$ $= \tan^{-1}\left\{\frac{\sqrt{1-e^2}\sin E / (1 - e\cos E)}{(\cos E - e)/(1 - e\cos E)}\right\}$	true anomaly
$t_k = t - sdf\, t_{0e}$	t is Galileo system time and t_k is the actual total time difference between the time t and the epoch time t_{0e} (t_{0a} for the almanacs) which accounts for beginning or end of week crossovers
$M = E - e \sin(E)$	Kepler's equation for eccentric anomaly E
$M = M_0 + nt_k$	mean anomaly
$n = n_0 + \Delta n$	corrected mean motion
$n_0 = \sqrt{\mu / A^3}$	computed mean motion (rad/s)
M_0, Δn, e, $A^{1/2}$, Ω_0, i_0, ω, $\dot{\Omega}$, di/dt, C_{uc}, C_{us}, C_{rc}, C_{rs}, C_{ic}, C_{is}, t_{0e}	ephemeris parameters transmitted in F/NAV signals page Types 2, 3 and 4, as well as I/NAV signals word Types 1, 2, 3 and 4 as indicated in 3.1.3.1.3.
$\pi = 3.1415926535898$	ratio of a circle's circumference to its diameter
$\mu = 3.986004418 \times 10^{14}$ m^3/s^2	geocentric gravitational constant
$\omega_E = 7.2921151467 \times 10^{-5}$ rad/s	mean angular velocity of the earth
c = 299792458 m/s	speed of light in a vacuum

3.1.3.2.5 *Ionospheric correction.*

Note.— Receivers operating in single-frequency mode can use the single-frequency ionospheric correction algorithm described in document EUROCAE ED-259 Minimum Operational Performance Standard for Galileo/Global Positioning System/Satellite-based Augmentation System Airborne Equipment, Appendix J (any version).

3.1.3.3 AIRCRAFT ELEMENTS

3.1.3.3.1 *GALILEO RECEIVER*

3.1.3.3.1.1 *Satellite tracking*. The receiver shall provide the capability to continuously track a minimum of four Galileo satellites and generate a position solution based upon those measurements.

3.1.3.3.1.2 *Doppler shift*. The receiver shall be able to compensate for dynamic Doppler shift effects on nominal Galileo signal carrier phase and OS code measurements. The receiver shall compensate for the Doppler shift that is unique to the anticipated application.

3.1.3.3.1.3 *Resistance to interference*. The receiver shall meet the requirements for resistance to interference as specified in 3.7.

3.1.3.3.1.4 *Application of clock and ephemeris data*. The receiver shall monitor the IODnav value and update ephemeris and clock data based upon a detected change in this parameter. To compute position and clock corrections, receivers shall use for each satellite, IODnav-tagged parameters corresponding to the same IODnav value. These parameters shall be retrieved from the most recent navigation data set received.

Note.— IODnav values are not necessarily incremented in steps of one. An IODnav with higher value does not necessarily mean that it tags more recent data. The only valid comparison between IODnav values is whether they are equal or not. For positioning, users can combine SIS from different satellites with different IODnav values, provided that the navigation parameters derived from each satellite are tagged by a unique IODnav value.

3.1.3.3.1.5 *Navigation data validity duration*. The receiver shall only use the ephemeris and clock corrections from a set of navigation data during a period of time no longer than four hours from the reference time of ephemeris (t_{0e}). The receiver shall not rely on performance commitments in Chapter 3, 3.7.3.1.3, if the age of t_{0e} exceeds four hours.

Note.— See Attachment D, 4.1.3.11 for guidance material on the age of t_{0e}.

3.1.3.4 TIME

3.1.3.4.1 *Galileo system time (GST)*. The GST shall be a continuous timescale based on the definition of the second (according to the International System of Units, SI) whose origin/reference epoch (GST (T0)) shall be defined as 13 seconds before 1999-08-22 00:00:00 UTC. The Galileo navigation message shall contain all necessary parameters to convert between GST and UTC.

Note.— See Attachment D, 4.1.3.9 for GST guidance material.

3.1.3.5 COORDINATE SYSTEM

3.1.3.5.1 The Galileo OS broadcast ephemeris shall determine the position of the transmitting antenna phase centre of a given satellite in the Galileo Terrestrial Reference Frame (GTRF) ECEF reference frame.

3.1.3.5.2 The GTRF difference from the latest physical realization of the International Terrestrial Reference Frame (ITRF) shall not exceed 3 cm 95 per cent globally.

Note 1.— WGS-84 and GTRF are both realizations of ITRF. The difference between GTRF and WGS 84 used in GPS, is considered insignificant for aviation.

Note 2.— See Attachment D, 4.1.3.10 for additional information on GTRF.

3.1.4 BeiDou Navigation Satellite System (BDS) Open Service (OS) (B1I, B1C and B2a)

3.1.4.1 NON-AIRCRAFT ELEMENTS

3.1.4.1.1 *BDS RF CHARACTERISTICS*

Note.— This section describes RF characteristics of the BDS B1I, B1C and B2a signals transmitted by BDS-3 MEO and IGSO satellites.

3.1.4.1.1.1 B1I, B1C and B2a common requirements

3.1.4.1.1.1.1 *Carrier phase noise*. The carrier phase noise spectral density of the unmodulated carrier on B1I, B1C and B2a shall be such that a third-order phase locked loop of 10 Hz one-sided noise bandwidth is able to track the carrier to an accuracy of 0.1 radian root mean square (RMS).

3.1.4.1.1.1.2 *Spurious emissions*. In-band spurious emissions shall be at least 50 dB below the unmodulated B1I, B1C and B2a carrier over the allocated channel bandwidth.

Note.— The allocated channel bandwidth for the B1I signal is 4.096 MHz. The allocated channel bandwidth for the B1C signal is 32.736 MHz. The allocated channel bandwidth for the B2a signal is 20.46 MHz.

3.1.4.1.1.1.3 *Data/code coherence*. The edge of each data symbol shall be aligned with the edge of the corresponding ranging code chip, and the start time of the first chip of the periodic ranging code shall be aligned with the start time of the data symbol bit. The edges of each secondary code chip shall be aligned with the edges of the primary code chip and the primary code first chip start time shall be aligned with the starting time of the secondary code chip.

3.1.4.1.1.2 *B1I RF characteristics*

3.1.4.1.1.2.1 *B1I correlation loss*. The correlation loss due to payload distortions shall not exceed 0.6 dB on B1I.

3.1.4.1.1.2.2 *B1I ranging code*. The chipping rate of the B1I ranging code shall be 2.046 megachips per second, and the length shall be 2 046 chips. The B1I ranging code (hereinafter referred to as CB1I) shall be a balanced Gold code truncated with the last one chip. The Gold code shall be generated by means of Modulo-2 addition of G1 and G2 sequences, which are respectively derived from two 11-bit linear shift registers. The generator of CB1I shall be as shown in Figure B-19.

Note.— Additional information concerning the B1I ranging code is given in the BeiDou Navigation Satellite System Signal In Space Interface Control Document Open Service Signal B1I (Version 3.0), dated February 2019 (hereinafter referred to as "BDS OS B1I ICD"), section 4.3.

3.1.4.1.1.3 *B1C RF characteristics*

3.1.4.1.1.3.1 *B1C correlation loss*. The correlation loss due to payload distortions shall not exceed 0.3 dB on B1C.

3.1.4.1.1.3.2 *B1C signal generation*. The B1C signal shall comprise two components, known as B1C data component and B1C pilot component.

3.1.4.1.1.3.3 *B1C signal power split*. The B1C signal power shall be 1:3 split between the B1C data component and the B1C pilot component.

3.1.4.1.1.3.4 *B1C data ranging code (C_{BIC_data})*. The B1C data ranging code sequence shall be a 10 230-chip length primary code repeated every 10 milliseconds.

Note.— Additional information concerning the B1C data primary code is given in BDS OS B1C ICD, section 5.2.1.

3.1.4.1.1.3.5 *B1C pilot ranging code (C_{BIC_pilot})*. The B1C pilot ranging code sequence shall be the Modulo-2 addition of a 10 230-chip length primary code repeated every 10 milliseconds and a 1 800-chip length secondary code repeated every 18 000 milliseconds.

Note.— Additional information concerning the B1C pilot primary code and secondary code is given in BDS OS B1C ICD, sections 5.2.1 and 5.2.2.

3.1.4.1.1.3.6 *B1C data component (S_{BIC_data}) generation*. The B1C data component shall be generated from the navigation message data (D_{BIC_data}) and the ranging code (C_{BIC_data}) modulated with the sine-phased BOC(1,1) subcarrier SC_{B1C_data}.

3.1.4.1.1.3.7 *B1C pilot component (S_{BIC_pilot}) generation*. The B1C pilot component shall be generated from the ranging code (C_{BIC_pilot}) modulated with the QMBOC(6, 1, 4/33) subcarrier SC_{B1C_pilot}. The subcarrier shall be composed of a BOC(1, 1) subcarrier and a BOC(6, 1) subcarrier, which shall be in phase quadrature with each other and have a power ratio of 29:4.

Note.— Additional information concerning B1C modulation is given in BDS OS B1C ICD, section 4.2.

3.1.4.1.1.4 *B2a RF characteristics*

3.1.4.1.1.4.1 *B2a correlation loss*. The correlation loss due to payload distortions shall not exceed 0.6 dB on B2a.

3.1.4.1.1.4.2 *B2a signal generation*. The B2a signal shall comprise two components known as B2a data component and B2a pilot component.

3.1.4.1.1.4.3 *B2a signal power split*. The B2a signal power shall be equally split between the B2a data component and the B2a pilot component.

3.1.4.1.1.4.4 *B2a data ranging code (C_{B2a_data})*. The B2a data ranging code sequence shall be the Modulo-2 addition of a 10 230-chip length primary code repeated every 1 millisecond and a 5-chip length secondary code repeated every 5 milliseconds.

Note.— Additional information concerning B2a_data primary code and secondary code is given in BDS OS B2a ICD, sections 5.2.1 and 5.2.2.

3.1.4.1.1.4.5 *B2a pilot ranging code* (C_{B2a_pilot}). The B2a pilot ranging code sequence shall be the Modulo-2 addition of a 10 230-chip length primary code repeated every 10 millisecond and a 100-chip length secondary code repeated every 100 milliseconds.

Note.— Additional information concerning B2a_pilot primary code and secondary code is given in BDS OS B2a ICD, sections 5.2.1 and 5.2.2.

3.1.4.1.1.4.6 *B2a data component* (S_{B2a_data}) generation. The B2a data component shall be BPSK(10) modulated from the navigation message data (D_{B2a_data}) and the ranging code (C_{B2a_data}).

3.1.4.1.1.4.7 *B2a pilot component (S_{B2a_pilot}) generation*. The B2a pilot component shall be BPSK(10) modulated from the ranging code $C_{B2a\_pilot}(t)$ only.

Note.— Additional information concerning B2a modulation is given in BDS OS B2a ICD, section 4.2.

3.1.4.1.2 *DATA STRUCTURE*

3.1.4.1.2.1 *B1I D1 message characteristics*

3.1.4.1.2.1.1 *General*. The B1I navigation message broadcast by BDS-3 MEOs and IGSOs B1I signals (“D1 navigation message”) shall be modulated with 1 kbps secondary Neuman-Hofman (NH) code. The D1 navigation message shall be structured into superframes, frames and subframes. The frame structure of the D1 navigation message shall be as shown in Figure B-20.

Note.— Additional information concerning the NH code is given in BDS OS B1I ICD, section 5.2.1.

3.1.4.1.2.1.2 *Superframe*. Every superframe shall contain 36 000 bits. Every superframe shall be composed of 24 frames (24 pages).

3.1.4.1.2.1.3 *Frame*. Every frame shall contain 1 500 bits. Every frame shall be composed of 5 subframes.

3.1.4.1.2.1.4 *Subframe*. Every subframe shall contain 300 bits. Every subframe shall be composed of 10 words. Every word shall contain 30 bits. Every word shall consist of navigation message data and parity bits.

3.1.4.1.2.1.5 *Data parity*. Word 1 of each subframe shall contain 26 information bits and 4 parity bits in the least significant bits (LSBs), and words 2 through 10 shall contain 22 information bits and 8 parity bits in the LSBs. Bose-Chaudhuri-Hocquenghem (BCH)(15,11,1) encoding shall be used for error control and interleaving.

Note.— Additional information concerning BCH(15,11,1) encoding is given in BDS OS B1I ICD, section 5.1.3.

3.1.4.1.2.1.6 *Preamble*. Bits 1 through 11 of every subframe shall contain a preamble consisting of the sequence of bits “11100010010”.

3.1.4.1.2.1.7 *Subframe identification*. Bits 16 through 18 of every subframe shall contain the subframe identification, encoded as follows:

Code	001	010	011	100	101	110	111
Subframe identification	1	2	3	4	5	Reserved	Reserved

3.1.4.1.2.1.8 *Seconds-of-week (SOW)*. Bits 19 through 26 and bits 31 through 42 of each subframe of the D1 navigation message shall contain the 20-bit seconds-of-week (SOW), which is defined as the number of seconds that have occurred since the last Sunday, 00:00:00 BDT. The SOW count shall occur at the leading edge of the first preamble bit (MSB) of the subframe.

3.1.4.1.2.1.9 *Reserved bits*. Bits 12 through 15 of every subframe or page of a subframe shall be reserved.

3.1.4.1.2.2 *B1C message characteristics*

3.1.4.1.2.2.1 *General*. The B1C navigation message (B-CNAV1 navigation message) shall be broadcast as a sequence of frames. Each frame shall contain 1 800 symbols with a symbol rate of 100 symbols per second. Each frame shall consist of three subframes with the basic frame structure shown in Figure B-21.

3.1.4.1.2.2.2 *Subframe 1*. Subframe 1 shall contain 14 bits before BCH error correction encoding. After BCH (21,6) + BCH (51,8) encoding, its length shall be 72 symbols.

Note.— Additional information concerning BCH(21,6)+BCH(51,8) encoding is given in BDS OS B1C ICD, section 6.2.2.1.

3.1.4.1.2.2.3 *Subframe 2*. Subframe 2 shall contain 600 bits before low-density parity check (LDPC) encoding. The 576 MSBs of subframe 2 shall be included in the CRC calculation, and the 24 LSBs shall be the corresponding CRC bits. After 64-ary LDPC (200, 100) encoding, its length shall be 1 200 symbols.

Note.— Additional information concerning 64-ary LDPC (200, 100) encoding is given in BDS OS B1C ICD, section 6.2.2.2.

3.1.4.1.2.2.4 *Subframe 3*. Subframe 3 shall contain 264 bits before LDPC encoding. The 6 MSBs shall be the page type (PageID), the 24 LSBs shall be CRC bits, and the remaining 234 bits shall be message data. PageID and message data shall be included in the CRC calculation. After 64-ary LDPC (88,44) encoding, its length shall be 528 symbols. The frame structure of subframe 3 shall be as shown in Figure B-22.

Note.— Additional information concerning 64-ary LDPC (88,44) encoding is given in BDS OS B1C ICD, section 6.2.2.3.

3.1.4.1.2.2.5 *Interleaving*. After encoding, subframe 2 and subframe 3 shall be combined and interleaved using a block interleaver.

Note.— Additional information concerning interleaving is given in BDS OS B1C ICD, section 6.2.2.4.

3.1.4.1.2.3 *B2a message characteristics*

3.1.4.1.2.3.1 *General*. The B2a navigation message (“B-CNAV2 navigation message”) shall be broadcast as a sequence of frames. Each frame shall contain 600 symbols with a symbol rate of 200 symbols per second. The B-CNAV2 basic frame structure shall be as shown in Figure B-23.

3.1.4.1.2.3.2 *Frame structure*. Each frame shall consist of a 24-symbol preamble and a 288-bit navigation message before error correction encoding. After encoding by 64-ary LDPC (96,48), its length shall be 1 200 symbols.

Note.— Additional information concerning 64-ary LDPC (96,48) encoding is given in BDS OS B2a ICD, section 6.2.2.

3.1.4.1.2.3.2.1 Preamble. Each frame shall contain a preamble consisting of the sequence of bits “111000100100110111101000”.

3.1.4.1.2.3.2.2 *Navigation message*. Each frame shall contain 288 bits before LDPC encoding, including the 6-bit PRN code, 6-bit message type, 18-bit SOW, 234-bit message data and 24-bit CRC. PRN, message type, SOW, and message data shall be included in the CRC calculation. After 64-ary LDPC(96, 48) encoding, the frame length shall be 576 symbols.

3.1.4.1.3 *DATA CONTENT*

Note.— A full description of the data content of the words being transmitted is given in BDS OS B1I ICD, BDS OS B1I ICD and BDS OS B2a ICD.

3.1.4.1.3.1 *B1I data content*

3.1.4.1.3.1.1 The B1I D1 navigation data shall contain the information listed in Table B-42.

Note.— Additional information concerning B1I D1 content and application of the data is given in BDS OS B1I ICD, section 5.2.4.

Table B-42. B1I D1 navigation message content

Subframe number	*Page number*	*Data content*
1	*N/A*	Week number (WN), user range accuracy index (URAI), autonomous satellite health flag (SatH1), ionosphere model parameters (α_n, β_n, n=0 - 3), equipment group delay differential (T_{GD1},T_{GD2}), clock correction parameters (t_{oc}, a_0, a_1, a_2), age of data, clock (AODC), age of data, ephemeris (AODE)
2	*N/A*	Ephemeris parameters (1/2) ($\sqrt{A}$, e, Δn, M_0, C_{uc}, C_{us}, C_{rc}, C_{rs})
3	*N/A*	Ephemeris parameters (2/2) (t_{oe}, ω, Ω_0, $\dot{\Omega}$, i_0, IDOT, C_{ic}, C_{is})
4	1 - 24	Pnum, almanac parameters (t_{oa}, $\sqrt{A}$, e, ω, M_0, Ω_0, $\dot{\Omega}$, δ_i, a_0, a_1, AmEpID)
5	1 - 6	
5	7	Pnum, health information for 19 satellites (Hea_i, i=1 - 19)
5	8	Pnum, health information for 11 satellites (Hea_i, i=20 - 30), week number of almanac (WN_a), t_{oa},
5	9	Pnum, time parameters relative to GPS time (A_{0GPS}, A_{1GPS}), time parameters relative to GLONASS time (A_{0GLO}, A_{1GLO}), time parameters relative to Galileo time (A_{0Gal}, A_{1Gal})
5	10	Pnum, time parameters relative to UTC (A_{0UTC}, A_{1UTC}, Δt_{LS}, Δt_{LSF},WN_{LSF}, DN)
5	11 - 23	Pnum, almanac parameters (t_{oa}, $\sqrt{A}$, e, ω, M_0, Ω_0, $\dot{\Omega}$, δ_i, a_0, a_1, AmID)
5	24	Pnum, health information for 14 satellites (Hea_i, i=31 - 43)

3.1.4.1.3.1.2 *User range accuracy index (URAI)*. Bits 49 through 52 of subframe 1 of the D1 message shall contain the URAI. The range of URAI shall be from 0 to 15. The user range accuracy (URA) shall be used to describe the signal-in-space accuracy (SISA) in metres. The relationship between URAI and URA shall be as shown in Table B-43.

Note.— Additional information concerning URAI is given in BDS OS B1I ICD, section 5.2.4.5 and section 5.2.3, Figure 5-8.

Table B-43. Relationship between URAI and URA

Code	*URAI*	*URA range (m, 1σ)*
0000	0	0.00 < URA ≤ 2.40
0001	1	2.40 < URA ≤ 3.40
0010	2	3.40 < URA ≤ 4.85
0011	3	4.85 < URA ≤ 6.85
0100	4	6.85 < URA ≤ 9.65
0101	5	9.65 < URA ≤ 13.65
0110	6	13.65 < URA ≤ 24.00
0111	7	24.00 < URA ≤ 48.00
1000	8	48.00 < URA ≤ 96.00
1001	9	96.00 < URA ≤ 192.00
1010	10	192.00 < URA ≤ 384.00
1011	11	384.00 < URA ≤ 768.00
1100	12	768.00 < URA ≤ 1 536.00
1101	13	1 536.00 < URA ≤ 3 072.00
1110	14	3 072.00 < URA ≤ 6 144.00
1111	15	URA > 6 144.00

3.1.4.1.3.1.3 *Autonomous satellite health flag (SatH1)*. Bit 43 of subframe 1 of the D1 message shall provide SatH1. A value of "0" shall indicate that the broadcasting satellite is healthy and a value of "1" shall indicate that the broadcasting satellite is unhealthy.

Note.— Additional information concerning SatH1is given in BDS OS B1I ICD, section 5.2.4.6 and section 5.2.3, Figure 5-8.

3.1.4.1.3.1.4 Satellite clock correction parameter t_{oc} shall be broadcast in the D1 navigation message. The value of t_{oc} shall monotonically increase over the week and shall change if any of the clock parameters change.

Note.— The update of the clock parameters always starts at the beginning of a superframe.

3.1.4.1.3.1.5 Satellite ephemeris parameter t_{oe} shall be broadcast in the D1 navigation message. The value of t_{oe} shall monotonically increase over the week and shall change if any of the ephemeris parameters change. If t_{oe} changes, then t_{oc} shall also change.

Note.— The update of the ephemeris parameters always starts at the beginning of a superframe.

3.1.4.1.3.1.6 *Page number (Pnum)*. Both subframe 4 and subframe 5 shall have 24 pages which shall be identified through the page number (Pnum) contained in bits 44 through 50 of the subframes.

3.1.4.1.3.1.7 *Identification of expanded almanacs (AmEpID)*. Bits 291 through 292 of pages 1 through 24 of subframe 4 and pages 1 to 6 of subframe 5 shall contain AmEpID. A binary value of "11" of AmEpID shall indicate that pages 11 through 23 of subframe 5 are used to broadcast the almanac parameters for SV ID 31 through 63, and page 24 of subframe 5 is used to broadcast the satellite health information for SV ID 31 through 63. Otherwise, pages 11 through 24 of subframe 5 shall be reserved.

3.1.4.1.3.1.8 *Identification of time-sharing broadcasting (AmID)*. Bits 291 through 292 of pages 11 through 23 of subframe 5 and bits 216 through 217 of page 24 of subframe 5 shall provide AmID. AmID shall be used combining with AmEpID and Pnum to indicate the PRN of the satellite transmitting the almanac parameters in the Pnum page. AmID shall only be used when AmEpID has a binary value of "11". The broadcasting scheme for the almanac parameters of SV ID 31 through 63 shall be as shown in Table B-44.

Table B-44. Broadcasting scheme for the almanac parameters of PRNs 31 through 63

AmEpID	*AmID*	*Pnum*	*PRN*
11	01	11 - 23	31 - 43
	10	11 - 23	44 - 56
	11	11 - 17	57 - 63
		18 - 23	Reserved
	00	11 - 23	Reserved

3.1.4.1.3.2 *B1C and B2a data content*

3.1.4.1.3.2.1 The B-CNAV1 data broadcasted on B1C shall contain the information listed in Table B-45. The B-CNAV2 data broadcasted on B2a shall contain the message types and data content listed in Table B-46.

Note 1.— Additional information concerning B-CNAV1 data content and application of the data is given in BDS OS B1C ICD, section 7.

Note 2.— Additional information concerning B-CNAV2 data content and application of the data is given in BDS OS B2a ICD, section 7.

Table B-45. B1C navigation message information contents

Subframe number	*Data content*	
1	PRN, SOH	
2	WN, HOW, IODC (issue of data, clock), IODE (issue of data, ephemeris)	
	Data blocks*	Ephemeris I* (t_{oe}, SatType,ΔA, $\dot{A}$, Δn_0, $\Delta \dot{n}_0$, M_0, e, ω)
		Ephemeris II* (Ω_0, i_0, $\dot{\Omega}$, $\dot{i_0}$, C_{is}, C_{ic}, C_{rs}, C_{rc}, C_{us}, C_{uc})
		Clock correction parameters* (t_{oc},a_0,a_1,a_2)
	T_{GDB2ap}, ISC_{B1Cd}, T_{GDB1Cp}, Rev, CRC	
3**	Page Type 1(PageID, health status(HS), data integrity flag (DIF), signal integrity flag (SIF), accuracy integrity flag (AIF), signal-in-space monitored accuracy index (SISMAI)***, SISAIoe, SISAIoc*, ionospheric delay correction model parameters*, BDT-UTC time offset parameters*)	
	Page Type 2 (PageID, HS, DIF, SIF, AIF, SISMAI***, SISAIoc*, WNa, t_{oa}, reduced almanac*)	
	Page Type 3 (PageID, HS, DIF, SIF, AIF, SISMAI***, SISAIoe, earth orientation parameters (EOP), BDT-GNSS time offset (BGTO) parameters)	
	Page Type 4 (PageID, HS, DIF, SIF, AIF, SISMAI***, SISAIoc*, midi almanac*)	

* Data blocks containing a set of parameters.
** At most 63 page types can be defined for subframe 3. Currently, four valid page types have been defined: 1, 2, 3 and 4.
*** SISMA broadcast in B-CNAV1 is reserved for future use.

Table B-46. B2a message types and the data content

	*Message type***	*Data content*
1	10	PRN, MesType, SOW, WN, DIF(B2a), SIF(B2a), AIF(B2a), SISMAI****， DIF(B1C), SIF(B1C), IODE, ephemeris I*
2	11	PRN, MesType, SOW, HS, DIF(B2a), SIF(B2a), AIF(B2a), SISMAI****， DIF(B1C), SIF(B1C), ephemeris II*
3	30	PRN, MesType, SOW, HS, DIF(B2a), SIF(B2a), AIF(B2a), SISMAI****， DIF(B1C), SIF(B1C), clock correction parameters*, IODC, T_{GDB2ap}, ISC_{B2ad}, ionospheric delay correction model parameters*， T_{GDB1Cp}
4	31	PRN, MesType, SOW, HS, DIF(B2a), SIF(B2a), AIF(B2a), SISMAI****， DIF(B1C), SIF(B1C), clock correction parameters*, IODC, WNa， toa, reduced almanac parameters*

	*Message type***	*Data content*
5	32	PRN, MesType, SOW, HS,DIF(B2a), SIF(B2a), AIF(B2a), SISMAI****， DIF(B1C), SIF(B1C), clock correction parameters*, IODC, EOP
6	33	PRN, MesType, SOW, HS, DIF(B2a), SIF(B2a), AIF(B2a), SISMAI****， DIF(B1C), SIF(B1C), AIF(B1C), clock correction parameters*, BGTO parameters*, reduced almanac parameters*, IODC, WNa, toa
7	34	PRN, MesType, SOW, HS, DIF(B2a), SIF(B2a), AIF(B2a), SISMAI****， DIF(B1C), SIF(B1C), SISAIoc*， clock correction parameters*, IODC, BDT-UTC time offset parameter*
8	40	PRN, MesType, SOW, HS, DIF(B2a), SIF(B2a), AIF(B2a),SISMAI****， DIF(B1C), SIF(B1C), SISAIoe，SISAIoc*, midi almanac parameters*

* Data blocks containing a set of parameters.
** At most 63 message types can be defined for the B-CNAV2 navigation message. Currently, eight valid message types have been defined: 10, 11, 30, 31, 32, 33, 34 and 40.
*** The broadcast order of the B-CNAV2 message types may be dynamically adjusted, however Message Types 10 and 11 are broadcast continuously together.
**** SISMAI broadcast in B-CNAV2 is reserved for future use.

3.1.4.1.3.2.2 *Page type*. Page ID shall be used to identify the page types of subframe 3 in B CNAV1. It shall be a 6-bit unsigned integer. Its definition shall be as shown in Table B-47.

Table B-47. Page type definition

Page ID (binary)	*Page type*
000000	Invalid
000001	1
000010	2
000011	3
000100	4
Others	Reserved

3.1.4.1.3.2.3 *Message type (MesType).* Message type shall be used to identify the message types of the B-CNAV2 frames. It shall be a 6-bit unsigned integer. Its definition shall be as shown in Table B-48.

Table B-48. Message type definition

Message Type (Binary)	Message type
000000	Invalid
001010	10
001011	11
011110	30
011111	31
100000	32
100001	33
100010	34
101000	40
Others	Reserved

3.1.4.1.3.2.4 *Issue of data*

Note 1.— Additional information concerning B1C issue of data is given in BDS OS B1C ICD, section 7.4.1, Table 7-3 and section 7.4.2, Table 7-4.

Note 2.— Additional information concerning B2a issue of data is given in BDS OS B2a ICD, section 7.4.1, Table 7-3 and section 7.4.2, Table 7-4.

3.1.4.1.3.2.4.1 *Issue of data, ephemeris (IODE)*. IODE shall indicate the issue number of a set of ephemeris parameters. The IODE value shall be updated when any ephemeris parameter is updated. The IODE values shall indicate the range of the ephemeris data age. The ephemeris data age shall be defined as the offset between the ephemeris parameters reference time (t_{oe}) and the last measured time for generating the ephemeris parameters. The values of IODE shall not be repeated within any 24 hours. The relationship between the IODE values and the ephemeris data age shall be as in Table B-49.

Table B-49. Relationship between the IODE values and the ephemeris data age

IODE value	*Ephemeris data age*
0 – 59	Less than 12 hours
60 – 119	12 hours – 24 hours
120 – 179	1 day – 7 days
180 – 239	Reserved
240 – 255	More than 7 days

3.1.4.1.3.2.4.2 *Issue of data, clock (IODC)*. IODC shall indicate the issue number of a set of clock correction parameters. The IODC value shall be updated when any clock correction parameter is updated. The IODC values shall indicate the range of the clock correction data age. The clock correction data age shall be defined as the offset between the clock correction parameters reference time (t_{oc}) and the last measured time for generating the clock correction parameters. The range of the clock correction data age shall be defined by the 2 MSBs of IODC together with the 8 LSBs of IODC. The values of IODC shall not be repeated within any 24 hours. The relationship between the IODC values and the clock correction data age shall be as in Table B-50.

Table B-50. Relationship between the IODC values and the clock correction data age

2 MSBs of IODC	*8 LSBs of IODC*	*Clock correction data age*
00	0 – 59 60 – 119 120 – 179 180 – 239 240 – 255	Less than 12 hours 12 hours – 24 hours 1 day – 7 days Reserved More than 7 days
01	0 – 59 60 – 119 120 – 179 180 – 239 240 – 255	Less than 12 hours Less than 12 hours Less than 1 day Reserved No more than 7 days
10	0 – 59 60 – 119 120 – 179 180 – 239 240 – 255	More than 12 hours More than 24 hours More than 7 days Reserved More than 7 days
11	Reserved	Reserved

3.1.4.1.3.2.5 *Satellite health status*. Satellite health status (SHS) shall indicate the health status of the transmitting satellite. The definitions of the SHS parameter shall be as shown in Table B-51.

Note 1.— Additional information concerning B1C SHS is given in BDS OS B1C ICD, section 7.14, Table 7-22.

Note 2.— Additional information concerning B2a SHS is given in BDS OS B2a ICD, section 7.14, Table 7-22.

Table B-51. Definitions of the SHS parameter

SHS value	*Definition*	*Description*
0	The satellite is healthy	The satellite provides services
1	The satellite is unhealthy or under test	The satellite does not provide services
2	Reserved	Reserved
3	Reserved	Reserved

3.1.4.1.3.2.6 *Satellite integrity status*. The satellite integrity status shall be conveyed by two parameters: data integrity flag (DIF) and signal integrity flag (SIF). Each of them shall occupy 1 bit and their definitions shall be as shown in Table B-52.

Note 1.— Additional information concerning the B1C satellite integrity status flag is given in BDS OS B1C ICD, section 7.15, Table 7-23.

Note 2.— Additional information concerning the B2a satellite integrity status flag is given in BDS OS B2a ICD, section 7.15, Table 7-23.

Table B-52. Definitions of the satellite integrity status flag parameters

Parameter	*Value*	*Definition*
DIF	0	The error of message parameters broadcast in this signal does not exceed the predictive accuracy
	1	The error of message parameters broadcast in this signal exceeds the predictive accuracy
SIF	0	This signal is normal
	1	This signal is abnormal

3.1.4.1.3.2.7 *Satellite signal-in-space health status (SISHS)*

3.1.4.1.3.2.7.1 BDS OS signal-in-space health status (SISHS) shall take one of the three states:

a) healthy: the signal meets the minimum service performance specified in this document;

b) unhealthy: the signal is not providing services or is being tested; and

c) marginal: the signal is neither of the two previous states.

3.1.4.1.3.2.7.2 The B1C and B2a SISHS shall be indicated by the combination of four SIS flags: HS, SIF and DIF. The mapping between the values of the three flags and B1C/B2a SISHS shall be as shown in Table B-53.

Table B-53. The mapping between the values of the three flags and B1C/B2a SISHS

B1C/B2a SISHS	*HS*	*SIF*	*DIF*
Healthy	0	0	0
Marginal	0	0	1
	2/3	0	0
Unhealthy	Any value	1	0/1
	1	0/1	0/1

3.1.4.1.3.2.8 *Signal-in-space accuracy (SISA) indices*. The SISA shall describe the predictive accuracy of the orbital parameters and clock correction parameters broadcast in the navigation message. It shall comprise the along-track and cross-track accuracy of the satellite orbit ($SISA_{oe}$) as well as the satellite orbital radius and satellite clock correction accuracy ($SISA_{oc}$). The SISA index parameters listed below shall be used to calculate $SISA_{oe}$ and $SISA_{oc}$ and shall be broadcast in B-CNAV1 Subframe 3 for B1C and B CNAV2 message Type 40 for B2a, respectively:

a) $SISAI_{oe}$ which is a signed, two's complement integer in the range of +15 to -16 shall indicate the combined satellite along-track and cross-track orbit accuracy as shown in Table B-54;

b) $SISAI_{ocb}$ which is a signed, two's complement integer in the range of +15 to -16 shall indicate the combined satellite orbit radial and satellite clock bias accuracy as shown in Table B-55;

c) $SISAI_{oc1}$ with an integer value in the range of 0 to 7 shall indicate the satellite clock drift accuracy;

d) $SISAI_{oc2}$ with an integer value in the range of 0 to 7 shall indicate the satellite clock drift rate accuracy; and

e) t_{op} shall indicate the time of week for data prediction.

Note 1.— Additional information concerning the SISA index parameters is given in BDS OS B1C ICD, section 7.16.

Note 2.— Additional information concerning the SISA index parameters is given in BDS OS B2a ICD, section 7.16.

Table B-54. Mapping between $SISA_{oe}$ index and $SISA_{oe}$

$SISA_{oe}$ index	*$SISA_{oe}$ (metres)*
15	*6 144.00 < $SISA_{oe}$ (or no accuracy prediction is available)*
14	*3 072.00 < $SISA_{oe} \leq$ 6 144.00*
13	*1 536.00 < $SISA_{oe} \leq$ 3 072.00*
12	*768.00 < $SISA_{oe} \leq$ 1 536.00*
11	*384.00 < $SISA_{oe} \leq$ 768.00*
10	*192.00 < $SISA_{oe} \leq$ 384.00*
9	*96.00 < $SISA_{oe} \leq$ 192.00*
8	*48.00 < $SISA_{oe} \leq$ 96.00*
7	*24.00 < $SISA_{oe} \leq$ 48.00*
6	*13.65 < $SISA_{oe} \leq$ 24.00*
5	*9.65 < $SISA_{oe} \leq$ 13.65*
4	*6.85 < $SISA_{oe} \leq$ 9.65*
3	*4.85 < $SISA_{oe} \leq$ 6.85*
2	*3.40 < $SISA_{oe} \leq$ 4.85*
1	*2.40 < $SISA_{oe} \leq$ 3.40*
0	*1.70 < $SISA_{oe} \leq$ 2.40*
-1	*1.20 < $SISA_{oe} \leq$ 1.70*

$SISA_{oe}$ index	$SISA_{oe}$ (metres)
-2	$0.85 < SISA_{oe} \leq 1.20$
-3	$0.60 < SISA_{oe} \leq 0.85$
-4	$0.43 < SISA_{oe} \leq 0.60$
-5	$0.30 < SISA_{oe} \leq 0.43$
-6	$0.21 < SISA_{oe} \leq 0.30$
-7	$0.15 < SISA_{oe} \leq 0.21$
-8	$0.11 < SISA_{oe} \leq 0.15$
-9	$0.08 < SISA_{oe} \leq 0.11$
-10	$0.06 < SISA_{oe} \leq 0.08$
-11	$0.04 < SISA_{oe} \leq 0.06$
-12	$0.03 < SISA_{oe} \leq 0.04$
-13	$0.02 < SISA_{oe} \leq 0.03$
-14	$0.01 < SISA_{oe} \leq 0.02$
-15	$SISA_{oe} \leq 0.01$
-16	No accuracy prediction available – used at own risk

Table B-55. Mapping between $SISA_{ocb}$ index and $SISA_{ocb}$

$SISA_{ocb}$ index	$SISA_{ocb}$ (metres)
15	$6\,144.00 < SISA_{ocb}$ (or no accuracy prediction is available)
14	$3\,072.00 < SISA_{ocb} \leq 6\,144.00$
13	$1\,536.00 < SISA_{ocb} \leq 3\,072.00$
12	$768.00 < SISA_{ocb} \leq 1\,536.00$
11	$384.00 < SISA_{ocb} \leq 768.00$
10	$192.00 < SISA_{ocb} \leq 384.00$
9	$96.00 < SISA_{ocb} \leq 192.00$
8	$48.00 < SISA_{ocb} \leq 96.00$
7	$24.00 < SISA_{ocb} \leq 48.00$
6	$13.65 < SISA_{ocb} \leq 24.00$
5	$9.65 < SISA_{ocb} \leq 13.65$
4	$6.85 < SISA_{ocb} \leq 9.65$
3	$4.85 < SISA_{ocb} \leq 6.85$
2	$3.40 < SISA_{ocb} \leq 4.85$
1	$2.40 < SISA_{ocb} \leq 3.40$

$SISA_{ocb}$ *index*	$SISA_{ocb}$ *(metres)*
0	$1.70 < SISA_{ocb} \leq 2.40$
-1	$1.20 < SISA_{ocb} \leq 1.70$
-2	$0.85 < SISA_{ocb} \leq 1.20$
-3	$0.60 < SISA_{ocb} \leq 0.85$
-4	$0.43 < SISA_{ocb} \leq 0.60$
-5	$0.30 < SISA_{ocb} \leq 0.43$
-6	$0.21 < SISA_{ocb} \leq 0.30$
-7	$0.15 < SISA_{ocb} \leq 0.21$
-8	$0.11 < SISA_{ocb} \leq 0.15$
-9	$0.08 < SISA_{ocb} \leq 0.11$
-10	$0.06 < SISA_{ocb} \leq 0.08$
-11	$0.04 < SISA_{ocb} \leq 0.06$
-12	$0.03 < SISA_{ocb} \leq 0.04$
-13	$0.02 < SISA_{ocb} \leq 0.03$
-14	$0.01 < SISA_{ocb} \leq 0.02$
-15	$SISA_{ocb} \leq 0.01$
-16	*No accuracy prediction available – used at own risk*

3.1.4.2 DEFINITIONS OF PROTOCOLS FOR DATA APPLICATION

Note.— This section defines the inter-relationships of the data broadcast message parameters. It provides definitions of parameters that are not transmitted but are used by either or both non-aircraft and aircraft elements, and that define terms applied to determine the navigation solution and its integrity.

3.1.4.2.1 *Parity algorithms*.

3.1.4.2.1.1 The D1 message uses BCH(15,11,1) encoding as parity algorithms as indicated in 3.1.4.1.2.1.5.

3.1.4.2.1.2 The B-CNAV1 message and the B-CNAV2 message use a 24-bit CRC. The CRC shall be calculated in accordance with 3.7, with the following generator polynomial:

$$G(X) = \sum_{i=0}^{24} g_i X^i$$

where:

G_i = 1 for 0, 1, 3, 4, 5, 6, 7, 10, 11, 14, 17, 18, 23, 24 and
0 otherwise.

3.1.4.2.2 *Satellite clock correction parameters*.

3.1.4.2.2.1 BDS system time t shall be computed as follows:

$$t = t_{sv} - \Delta t_{sv}$$

where:

t = BDT in seconds at time of signal transmission;

t_{sv} = the effective satellite ranging code phase time in seconds at time of signal transmission; and

Δt_{sv} = the offset of satellite ranging code phase time in seconds defined as:

$$\Delta t_{sv} = a_0 + a_1(t - t_{oc}) + a_2(t - t_{oc})^2 + \Delta t_r$$

where:

a_0, a_1 and a_2 and t_{oc} are parameters transmitted in D1 navigation message subframe 1, in B CNAV1 subframe 2 and B-CNAV2 message Types 30, 31, 32, 33 and 34; and

Δt_r is the relativistic effect correction term defined as:

$$\Delta t_r, = F \cdot e \cdot \sqrt{A} \cdot \sin E_k,$$

where:

e,$\sqrt{A}$, E_k, are parameters that can get from D1 navigation message subframe 2 and subframe 3, from B-CNAV1 subframe 2 and B-CNAV2 message Types 10 and 11;

$F = -2\mu^{1/2}/c^2$;

$\mu = 3.986004418 \times 10^{14}$ m^3/s^2 is the value of the earth's universal gravitational constant; and

$c = 2.99792458 \times 10^8$ m/s is the speed of light.

3.1.4.2.2.2 BDS system time related to UTC (NTSC) time. BeiDou system time offset with respect to UTC shall be determined by using B1I data, B1C data or B2a data.

Note.— Additional information concerning time parameters and algorithms relating BeiDou system time to UTC is given in section 5.2.4.18, BDS OS B1I ICD; section 7.12, BDS OS B1C ICD; and section 7.12, BDS OS B2a ICD.

3.1.4.2.3 *Satellite position*.

3.1.4.2.3.1 *B1I satellite position solution*. The current satellite position shall be computed as shown in Table B-56.

Note 1.— The current satellite position is defined using ephemeris parameters. The ephemeris parameters (t_{oe},, $\sqrt{A}$, e, ω, Δn, M_0, Ω_0, $\dot{\Omega}$, i_0, IDOT, C_{uc}, C_{us}, C_{rc}, C_{rs}, C_{ic}, C_{is}) used in the B1I satellite position solution are parameters transmitted by D1 navigation message subframe 2 and subframe 3.

Note 2.— Additional information concerning ephemeris parameters and algorithms is given in BDS OS B1I ICD, section 5.2.4.12.

Table B-56. B1I ephemeris algorithm

Computation steps	*Description*
$\mu = 3.986004418\times10^{14}\ m^3/s^2$	Value of the earth's universal gravitational constant in BDCS
$\dot{\Omega}_e = 7.2921150 \times 10^{-5}\ rad/s$	Value of the earth's rotation rate in BDCS
$\pi = 3.1415926535898$	Ratio of a circle's circumference to its diameter
$A = \left(\sqrt{A}\right)^2$	Computed semi-major axis
$n_0 = \sqrt{\frac{\mu}{A^3}}$	Computed mean motion (radians/s)
$t_k = t - t_{oe}$ *	Computed time from ephemeris reference epoch
$n = n_0 + \Delta n$	Corrected mean motion
$M_k = M_0 + nt_k$	Computed mean anomaly
$M_k = E_k - e \sin E_k$	Kepler's equation for eccentric anomaly (radians)
$\begin{cases} \sin v_k = \frac{\sqrt{1-e^2}\sin E_k}{1-e\cos E_k} \\ \cos v_k = \frac{\cos E_k - e}{1-e\cos E_k} \end{cases}$	Computed true anomaly
$\phi_k = v_k + \omega$	Computed argument of latitude
$\begin{cases} \delta u_k = C_{us}\sin(2\Phi_k) + C_{uc}\cos(2\Phi_k) \\ \delta r_k = C_{rs}\sin(2\Phi_k) + C_{rc}\cos(2\Phi_k) \\ \delta i_k = C_{is}\sin(2\Phi_k) + C_{ic}\cos(2\Phi_k) \end{cases}$	Argument of latitude correction Radius correction Inclination correction
$u_k = \phi_k + \delta u_k$	Corrected argument of latitude parameters
$r_k = A(1 - e\cos E_k) + \delta r_k$	Corrected radius
$i_k = i_0 + IDOT \cdot t_k + \delta i_k$	Corrected inclination
$\begin{cases} x_k = r_k \cos u_k \\ y_k = r_k \sin u_k \end{cases}$	Computed satellite positions in orbital plane
$\Omega_k = \Omega_0 + (\dot{\Omega} - \dot{\Omega}_e)t_k - \dot{\Omega}_e t_{oe}$	Corrected longitude of ascending node in BDCS
$\begin{cases} X_k = x_k\cos\Omega_k - y_k\cos i_k\sin\Omega_k \\ Y_k = x_k\sin\Omega_k + y_k\cos i_k\cos\Omega_k \\ Z_k = y_k\sin i_k \end{cases}$	MEO/IGSO satellite coordinates in BDCS

* In the equations, "t" is the time of signal transmission in BDT. "t_k" is the total time difference between t and ephemeris reference time t_{oe} , after accounting for beginning or end-of-week crossovers by subtracting 604 800 seconds from t_k if t_k is greater than 302 400 or adding 604 800 seconds to t_k if t_k is less than -302 400 seconds.

3.1.4.2.3.2 *B1C and B2a satellite position solution*. The current satellite position shall be computed as shown in Table B-57.

Note 1.— The current satellite position is defined using ephemeris parameters. The ephemeris parameters (t_{oe}, SatType, ΔA, $\dot{A}$, Δn_0, $\Delta\dot{n}_0$, M_0, e, ω, Ω_0, i_0, $\dot{\Omega}$, $\dot{i}_0$, C_{is}, C_{ic}, C_{rs}, C_{rc}, C_{us}, C_{uc}) used in the B1C and B2a satellite position solution are parameters transmitted by B-CNAV1 navigation message subframe 2 and 3, or by B-CNAV2 navigation message Type 10 and message Type 11.

Note 2.— Additional information concerning ephemeris parameters and algorithms is given in BDS OS B1C ICD, section 7.7, and in BDS OS B2a ICD, section 7.7.

Table B-57. B1C/B2a ephemeris algorithm

Computation steps	*Description*
$\mu = 3.986004418\times10^{14}$ m^3/s^2	Geocentric gravitational constant of BDCS
$\dot{\Omega}_e = 7.2921150 \times 10^{-5}$ rad/s	Earth's rotation rate of BDCS
$\pi = 3.1415926535898$	Ratio of a circle's circumference to its diameter
$t_k = t - t_{oe}$ **	Time from ephemeris reference time
$A_0 = A_{ref} + \Delta A$*	Semi-major axis at reference time
$A_k = A_0 + (\dot{A})t_k$	Semi-major axis
$n_0 = \sqrt{\frac{\mu}{A_0^3}}$	Computed mean motion (radians/s) at reference time
$\Delta n_A = \Delta n_0 + 1/2\,\Delta\dot{n}_0 t_k$	Mean motion difference from computed value
$n_A = n_0 + \Delta n_A$	Corrected mean motion
$M_k = M_0 + n_A t_k$	Mean anomaly
$M_k = E_k - e\sin E_k$	Kepler's equation for eccentric anomaly (radians)
$\begin{cases}\sin v_k = \dfrac{\sqrt{1-e^2}\sin E_k}{1-e\cos E_k} \\ \cos v_k = \dfrac{\cos E_k - e}{1-e\cos E_k}\end{cases}$	True anomaly
$\Phi_k = V_k + \omega$	Argument of latitude
$\begin{cases}\delta u_k = C_{us}\sin(2\Phi_k) + C_{uc}\cos(2\Phi_k) \\ \delta r_k = C_{rs}\sin(2\Phi_k) + C_{rc}\cos(2\Phi_k) \\ \delta i_k = C_{is}\sin(2\Phi_k) + C_{ic}\cos(2\Phi_k)\end{cases}$	Argument of latitude correction Radius correction Inclination correction

Computation steps	*Description*
$u_k = \Phi_k + \delta u_k$	Corrected argument of latitude
$r_k = A_k\,(1 - e\,cos\,E_k) + \delta r_k$	Corrected radius
$i_k = i_0 + \dot{i_0} \cdot t_k + \delta i_k$	Corrected inclination
$\begin{cases} x_k = r_k\,cos\,\mathrm{u}_k \\ y_k = r_k\,sin\,\mathrm{u}_k \end{cases}$	Position in orbital plane
$\Omega_k = \Omega_0 + \left(\dot{\Omega} - \dot{\Omega}_\mathrm{e}\right) t_k - \dot{\Omega}_\mathrm{e} t_\mathrm{oe}$	Corrected longitude of ascending node
$\begin{cases} X_k = x_k \cos\Omega_k - y_k \cos i_k \sin\Omega_k \\ Y_k = x_k \sin\Omega_k + y_k \cos i_k \cos\Omega_k \\ Z_k = y_k \sin i_k \end{cases}$	Coordinate of the MEO/IGSO satellite antenna phase centre in BDCS

* Semi-major axis reference value: $A_\mathrm{ref} = 27906100m\ (MEO).\ A_\mathrm{ref} = 42162200\mathrm{m}$ (IGSO/GEO).

** In the equation, t is the BDT time of signal transmission, i.e., the BDT time corrected for transit time; t_k is the total time difference between t and the ephemeris reference time t_{oe} , after accounting for beginning or end-of-week crossovers by subtracting 604 800 seconds from t_k if t_k is greater than 302 400 or adding 604 800 seconds to t_k if t_k is less than -302 400 seconds.

3.1.4.2.4 *Ionospheric delay correction*.

3.1.4.2.4.1 *B1I ionospheric delay correction*. The B1I ionospheric delay correction shall be computed as shown in Table B-58.

Table B-58. Single-frequency ionospheric delay computation for B1I

Computation steps	*Description*
t_E	t_E is the SOW in BDT computed by user.
$\Psi = \frac{\pi}{2} - \mathrm{E} - \arcsin\left(\frac{\mathrm{R}}{\mathrm{R}+\mathrm{h}} \cdot \cos\mathrm{E}\right)$	Ψ is the earth's central angle in radians between the user location and the ionospheric pierce point (IPP). R is the mean radius of the earth (6 378 km). E is the satellite elevation from the user's location in radians. H is the height of ionosphere (375 km).
$\Phi_\mathrm{M} = \arcsin\left(\sin\Phi_\mathrm{u} \cdot \cos\Psi + \cos\Phi_\mathrm{u} \cdot \sin\Psi \cdot \cos\mathrm{A}\right)$	Φ_M is the geographic latitude of the earth projection of the IPP in radians; A is the satellite azimuth from the user location in radians.
$\lambda_\mathrm{M} = \lambda_\mathrm{u} + \arcsin\left(\frac{\sin\Psi \cdot \sin\mathrm{A}}{\cos\Phi_\mathrm{M}}\right)$	λ_M is the geographic longitude of the earth projection of the IPP in radians.

Computation steps	*Description*
$t = (t_E + \lambda_M \times 43200/\pi)\ [\mathrm{modulo}\ 86400]$	t is the local time (range 0 – 86 400 s) for the earth projection of the IPP.
$A_2 = \begin{cases} \sum_{n=0}^{3} \alpha_n \left\lvert \Phi_M/\pi \right\rvert^n, A_2 \geq 0 \\ 0 \quad , \quad A_2 < 0 \end{cases}$	A_2 is the amplitude of the Klobuchar cosine curve in the daytime computed from the α_n; α_n: coefficients broadcast in D1 navigation message subframe 3.
$A_4 = \begin{cases} 172800 \quad , \quad A_4 \geq 172800 \\ \sum_{n=0}^{3} \beta_n \left\lvert \Phi_M/\pi \right\rvert^n, 172800 > A_4 \geq 72000 \\ 72000 \quad , \quad A_4 < 72000 \end{cases}$	A_4 is the period of the cosine curve in seconds; β_n are the coefficients broadcast in D1 navigation message subframe 3.
$\mathrm{I}'_z(t) \begin{cases} 5 \times 10^{-9} + \mathrm{A}_2 \cos\left[\frac{2\pi(t - 50400)}{\mathrm{A}_4}\right], \lvert t - 50400 \rvert < \mathrm{A}_4/4 \\ 5 \times 10^{-9} \quad , \lvert t - 50400 \rvert \geq \mathrm{A}_4/4 \end{cases}$	$\mathrm{I}'_z(t)$ is the vertical ionospheric delay correction.
$\mathrm{I}_{B1I}(t) = \frac{1}{\sqrt{1 - \left(\frac{R}{R+h} \cdot \cos E\right)^2}} \cdot \mathrm{I}'_z(t)$	$\mathrm{I}_{B1I(t)}$ is the ionospheric delay along the B1I propagation path.

Note.— Additional information concerning B1I ionospheric delay correction parameters and user algorithms is given in BDS OS B1I ICD, section 5.2.4.7.

3.1.4.2.4.2 *B1C and B2a ionospheric delay correction.*

3.1.4.2.4.2.1 *Single-frequency ionospheric delay correction*. The B1C or B2a ionospheric delay correction shall be computed as shown in Table B-59.

Table B-59. Single-frequency ionospheric delay computation for B1C and B2a

Computation steps	*Description*
$\psi = \frac{\pi}{2} - E - \arcsin\left(\frac{\mathrm{Re}}{\mathrm{Re} + \mathrm{H_{ion}}} \cdot \cos E\right)$	Ψ indicates the earth's central angle between the user position and the IPP E is the elevation angle between the user and satellite (in radians) H_{ion} is the altitude of the ionospheric single-layer shell (400 km) Re is the mean radius of the earth (6 378 km)
$\begin{cases} \varphi_g = \arcsin(\sin\varphi_u \cdot \cos\psi + \cos\varphi_u \cdot \sin\psi \cdot \cos A) \\ \lambda_g = \lambda_u + \arctan\left(\frac{\sin\psi \cdot \sin A \cdot \cos\varphi_u}{\cos\psi - \sin\varphi_u \cdot \sin\varphi_g}\right) \end{cases}$	φ_g is the geographic latitude of the earth projection of the IPP λ_g is the geographic longitude of the earth projection of the IPP φ_u is the user geographic latitude λ_u is the user geographic longitude A is the azimuth angle between the user and the satellite (in radians)
$\begin{cases} \varphi_m = \arcsin(\sin\varphi_{\mathrm{M}} \cdot \sin\varphi_g + \cos\varphi_{\mathrm{M}} \cdot \cos\varphi_g \cdot \cos(\lambda_g - \lambda_{\mathrm{M}})) \\ \lambda_m = \arctan\left(\frac{\cos\varphi_g \cdot \sin(\lambda_g - \lambda_{\mathrm{M}}) \cdot \cos\varphi_{\mathrm{M}}}{\sin\varphi_{\mathrm{M}} \cdot \sin\varphi_m - \sin\varphi_g}\right) \end{cases}$	φ_m is the geomagnetic latitude of the earth projection of the IPP in the earth-fixed reference frame λ_m is the geomagnetic longitude of the earth projection of the IPP in the earth-fixed reference frame λ_M is the geographic longitude of the north magnetic pole: $\lambda_M = \frac{-72.58^\circ}{180^\circ} \cdot \pi\ rad$ φ_M is the geographic latitude of the north magnetic pole: $\varphi_M = \frac{-80.27^\circ}{180^\circ} \cdot \pi\ rad$
$S_{lon} = \pi \cdot (1 - 2 \cdot (t - int(t)))$	S_{ion} is the mean geographic longitude of the sun (in radians) t is the time (in days) of the calculation epoch expressed by Modified Julian Date (MJD) *int (·)* is rounding down
$\begin{cases} \varphi' = \varphi_m \\ \lambda' = \lambda_m - \arctan\left(\frac{\sin(S_{lon} - \lambda_{\mathrm{M}})}{\sin\varphi_{\mathrm{M}} \cdot \cos(S_{lon} - \lambda_{\mathrm{M}})}\right) \end{cases}$	φ' is the geomagnetic latitude of the IPP in the solar-fixed reference frame λ' is the geomagnetic longitude of the IPP in the solar-fixed reference frame

Computation steps	*Description*
$\begin{cases} P_{n,n}(\sin\varphi') = (2n-1)!!\,(1-(\sin\varphi')^2)^{n/2}, \;\; n = m \\ P_{n,m}(\sin\varphi') = \sin\varphi' \cdot (2m+1) \cdot P_{m,m}(\sin\varphi'), n = m+1 \\ P_{n,m}(\sin\varphi') = \dfrac{(2n-1)\cdot \sin\varphi' \cdot P_{n-1,m}(\sin\varphi') - (n+m-1)\cdot P_{n-2,m}(sin\varphi')}{n-m}, else \end{cases}$	$P_{n,m}$ is the classic, un-normalized Legendre function $(2n\text{-}1)!! = (2n\text{-}1)\cdot(2n\text{-}3)\cdots$ $P_{0,0}(sin\varphi') = 1$
$\begin{cases} N_{n,m} = \sqrt{\dfrac{(n-m)!\cdot(2n+1)\cdot(2-\delta_{0,m})}{(n+m)!}} \\ \delta_{0,m} = \begin{cases} 1, m = 0 \\ 0, m > 0 \end{cases} \end{cases}$	$N_{n,m}$ is the normalization function
$\tilde{P}_{nm} = N_{n,m} \cdot P_{n,m}$	$\tilde{P}_{nm}$ is the normalized Legendre function with degree n and order m
$A_i = \begin{cases} \tilde{P}_{\lvert n_i\rvert,\lvert m_i\rvert}\ (\sin\varphi') \cdot \cos(m_i \cdot \lambda')\ m_i \geq 0 \\ \tilde{P}_{\lvert n_i\rvert,\lvert m_i\rvert}\ (\sin\varphi') \cdot \sin(-m_i \cdot \lambda')\ m_i < 0 \end{cases}$	The values of n_i and m_i are shown in Table B-60.
$\begin{cases} \beta_j = a_{0,j} + \sum_{k-1}^{12} (\, a_{k,j} \cdot cos(\omega_k \cdot t_p) + b_{k,j} \cdot sin(\omega_k \cdot t_p)) \\ \omega_k = \dfrac{2\pi}{T_k} \end{cases}$	$a_{k,j}$ and $b_{k,j}$ are the non-broadcast coefficients of the BeiDou global ionosphere delay correction model (BDGIM); T_k is the period for prediction corresponding to the individual non-broadcast coefficients; t_p is the odd hour the day (01:00:00, 03:00:00, 05:00:00..., or 23:00:00 in MJD) which is nearest to the calculation epoch.
$\begin{cases} A_0 = \sum_{j=1}^{17} \beta_j \cdot \beta_j, \\ \beta_j = \begin{cases} \tilde{P}_{\lvert n_j\rvert,\lvert m_j\rvert}\ (\sin\varphi') \cdot \cos(m_i \cdot \lambda')\ m_i \geq 0 \\ \tilde{P}_{\lvert n_j\rvert,\lvert m_j\rvert}\ (\sin\varphi') \cdot \sin(-m_j \cdot \lambda')\ m_j < 0 \end{cases} \end{cases}$	A_0 is the predictive ionospheric delay (in TECu)
$VTEC = A_0 + \sum_{i=1}^{9} \alpha_i\ A_i$	*VTEC* is the vertical ionospheric delay (in TECu) of the IPP

Computation steps	*Description*
$M_F = \frac{1}{\sqrt{1-\left(\frac{\mathrm{Re}}{\mathrm{Re}+\mathrm{H_{ion}}}\cdot\cos(E)\right)^2}}$	M_F is the ionospheric mapping function of the IPP
$T_{ion} = M_F \cdot \frac{40.28\times10^{16}}{f^2}\cdot VTEC$	T_{ion} is the ionospheric delay correction

Table B-60 Values of n_i and m_i

i	1	2	3	4	5	6	7	8	9
n_i/m_i	0/0	1/0	1/1	1/-1	2/0	2/1	2/-1	2/2	2/-2

Note.— Additional information concerning ionospheric delay correction model parameters broadcast on B1C and B2a and the user algorithms are given in BDS OS B1C ICD, section 7.8.2, Table 7-12, and in BDS OS B2a ICD, section 7.8.2, Table 7-12.

3.1.4.2.4.2.2 *Dual-frequency ionospheric delay correction*

For the dual-frequency user applying the B1C and B2a signals, the effect of the ionospheric delay shall be corrected by using the dual-frequency ionosphere-free pseudo-range.

The dual-frequency ionosphere-free pseudo-range from the B1C pilot component and the B2a pilot component ($PR_{\mathrm{B1Cp\text{-}B2ap}}$) shall be computed as follows:

$$PR_{\mathrm{B1Cp-B2ap}} = \frac{PR_{\mathrm{B2ap}} - k_{12}\cdot PR_{\mathrm{B1Cp}}}{1-k_{12}} - \frac{\mathrm{C}\cdot(\mathrm{T_{GDB2ap}} - k_{12}\cdot \mathrm{T_{GDB1Cp}})}{1-k_{12}}$$

The dual-frequency pseudo-range from the B1C pilot component and the B2a data component ($PR_{\mathrm{B1Cp\text{-}B2ad}}$) shall be computed as follows:

$$PR_{\mathrm{B1Cp-B2ad}} = \frac{PR_{\mathrm{B2ad}} - k_{12}\cdot PR_{\mathrm{B1Cp}}}{1-k_{12}} - \frac{\mathrm{C}\cdot(\mathrm{T_{GDB2ap}} + \mathrm{ISC_{B2ad}} - k_{12}\cdot \mathrm{T_{GDB1Cp}})}{1-k_{12}}$$

The dual-frequency pseudo-range from the B1C data component and the B2a pilot component ($PR_{\mathrm{B1Cd\text{-}B2ap}}$) shall be computed as follows:

$$PR_{\mathrm{B1Cd-B2ap}} = \frac{PR_{\mathrm{B2ap}} - k_{12}\cdot PR_{\mathrm{B1Cd}}}{1-k_{12}} - \frac{\mathrm{C}\cdot(\mathrm{T_{GDB2ap}} - k_{12}\cdot \mathrm{T_{GDB1Cp}} - k_{12}\cdot \mathrm{ISC_{B1Cd}})}{1-k_{12}}$$

The dual-frequency pseudo-range from the B1C data component and the B2a data component (PRB1Cd-B2ad) shall be computed as follows:

$$PR_{\mathrm{B1Cd-B2ad}} = \frac{PR_{\mathrm{B2ad}} - k_{12} \cdot PR_{\mathrm{B1Cd}}}{1 - k_{12}} - \frac{\mathrm{C} \cdot (\mathrm{T_{GDB2ap}} + \mathrm{ISC_{B2ad}} - k_{12} \cdot \mathrm{T_{GDB1Cp}} - k_{12} \cdot \mathrm{ISC_{B1Cd}})}{1 - k_{12}}$$

where $K_{12} = \left(\frac{1575.42}{1176.45}\right)^2$, is the factor associated with frequency;

PR_{B1Cp} is the measured pseudo-range of the B1C pilot component (corrected by the clock correction but not corrected by $\mathrm{T_{GDB1Cp}}$);

PR_{B1Cd} is the measured pseudo-range of the B1C data component (corrected by the clock correction but not corrected by $\mathrm{T_{GDB1Cp}}$ and $\mathrm{ISC_{B1Cd}}$);

PR_{B2ap} is the measured pseudo-range of the B2a pilot component (corrected by the clock correction but not corrected by $\mathrm{T_{GDB2ap}}$);

PR_{B2ad} is the measured pseudo-range of the B2a data component (corrected by the clock correction but not corrected by $\mathrm{T_{GDB2ap}}$ and $\mathrm{ISC_{B2ad}}$);

$\mathrm{T_{GDB1Cp}}$ is the group delay differential of the B1C pilot component;

$\mathrm{T_{GDB2ap}}$ is the group delay differential of the B2a pilot component;

$\mathrm{ISC_{B1Cd}}$ is the group delay differential between the B1C data component and the B1C pilot component;

$\mathrm{ISC_{B2ad}}$ is the group delay differential between the B2a data component and the B2a pilot component;

c = 2.99792458×10^8 m/s is the speed of light.

Note 1.— Additional information concerning B1C ionospheric delay model parameters is given in BDS OS B1C ICD, section 7.8.

Note 2.— Additional information concerning B2a ionospheric delay model parameters is given in BDS OS B2a ICD, section 7.8.

3.1.4.2.5 *SISA calculation for B1C and B2a*.

The signal-in-space accuracy (SISA) for integrity use shall be calculated as:

$$SISA = \sqrt{(SISA_{oe} \times \sin 14°)^2 + SISA_{oe^2}}$$

where

$\mathrm{SISA_{oe}}$ is the upper bound value corresponding to the $\mathrm{SISA_{oe}}$ index "N" as broadcast in B-CNAV1 Subframe 3 for B1C and in B-CNAV2 message Types 34 and 40 for B2a, respectively (defined in 3.1.4.1.3.2.8) as shown in Table B-54.

$SISA_{oc}$ shall be calculated with the following equations (in metres):

$$SISA_{oc} = SISA_{ocb} + SISA_{oc1}\left(t - t_{op}\right), for\ t - t_{op} \leq 93600s$$
$$SISA_{oc} = SISA_{ocb} + SISA_{oc1}\left(t - t_{op}\right) + SISA_{oc2}\left(t - t_{op} - 93600\right)^2, for\ t - t_{op} > 93600s$$

where

$SISA_{ocb}$ is the upper bound value corresponding to the $SISA_{ocb}$ index "N" as broadcast in B-CNAV1 Subframe 3 for B1C and in B-CNAV2 message Types 34 and 40 for B2a, respectively (defined in 3.1.4.1.8) as shown in Table B-55;

$SISA_{oc1}$ is the satellite clock drift accuracy in metres per second derived from $SISAI_{oc1}$ (defined in 3.1.4.1.3.2.8) as follows:

$$SISA_{oc1} = 2^{-(SISAI_{oc1}+14)}$$

$SISA_{oc2}$ is the satellite clock drift rate accuracy in metres per square second derived from $SISAI_{oc2}$ (defined in 3.1.4.1.3.2.8) as follows:

$$SISA_{oc2} = 2^{-(SISAI_{oc2}+28)}$$

where

t is the BDS system time in second;

t_{op} is the time of week for data prediction in second broadcast in B-CNAV1 subframe 3 for B1C and in B CNAV2 message Types 34 and 40 for B2a, respectively.

3.1.4.3 AIRCRAFT ELEMENTS

3.1.4.3.1 *BDS RECEIVER*

3.1.4.3.1.1 *Satellite tracking*. The receiver shall provide the capability to continuously track a minimum of four BDS satellites and generate a position solution based upon those measurements.

3.1.4.3.1.2 *Doppler shift*. The receiver shall be able to compensate for dynamic Doppler shift effects on nominal BDS OS signal carrier phase and ranging code measurements. The receiver shall compensate for the Doppler shift that is unique to the anticipated application.

3.1.4.3.1.3 *Resistance to interference*. The receiver shall meet the requirements for resistance to interference as specified in 3.7.

3.1.4.3.1.4 *Application of clock and ephemeris data*. The receiver shall ensure that it is using the correct ephemeris and clock data before providing any position solution. For B1I, the receiver shall monitor the parameters t_{oc} and t_{oe} to update clock and ephemeris data based upon the detected change in these parameters. For B1C and B2a, the receiver shall monitor the parameters IODC and IODE to update clock and ephemeris data based upon the detected change in these parameters.

3.1.4.4 TIME

The time reference for BDS shall be the BeiDou Navigation Satellite System Time (BDT). BDT shall adopt the International System of Units (SI) seconds, and shall accumulate continuously without leap seconds. The start epoch of BDT shall be 00:00:00 on 1 January 2006 of Coordinated Universal Time (UTC). BDT shall connect with UTC via UTC (NTSC), and the deviation of BDT to UTC shall be maintained within 50 nanoseconds (Modulo 1 second). The leap seconds shall be broadcast in the navigation (NAV) message.

3.1.4.5 COORDINATE SYSTEM

3.1.4.5.1 *BeiDou Coordinate System*. The BDS broadcast ephemeris shall describe the position of the transmitting antenna phase centre of a given satellite in the BeiDou Coordinate System (BDCS).

3.1.4.5.2 The difference between the latest physical realization of ITRF and BDCS shall not exceed 3 cm (95 per cent).

Note 1.— WGS-84 and BDS terrestrial reference frame BDCS are both realizations of ITRF. The difference between BDCS and WGS-84 used in GPS is considered insignificant for aviation.

Note 2.— Additional information on the BDCS is in Attachment D, 4.1.4.9.

3.2 (Reserved)

3.3 Use of multiple core satellite constellations

3.3.1 AIRCRAFT ELEMENTS

3.3.1.1 *Multi-constellation GNSS receiver*. The multi-constellation GNSS receiver shall process signals from two or more core satellite constellations in accordance with the requirements specified in 3.1.1.3.1, GPS receiver, 3.1.2.3.1, GLONASS receiver, 3.1.3.3.1, Galileo receiver and 3.1.4.3.1, BDS receiver.

3.3.1.1.1 *Resistance to interference*. The multi-constellation GNSS receiver shall meet the individual requirements for the core satellite constellations processed as specified in 3.7.

3.3.1.2 *Antenna(e)*. Core satellite constellation signals shall be received through one or more antennae.

Note.— Performance characteristics of GNSS receiver antennae are defined in 3.8.

3.3.1.3 Position information provided by a multi-constellation GNSS receiver shall be expressed in WGS-84 earth coordinates.

3.3.1.4 When combining measurements from core satellite constellations, the difference among each core satellite constellation reference time shall be taken into account.

3.3.1.4.1 Multi-constellation GNSS receivers shall solve for the time offset between the core constellations as an additional unknown parameter in the navigation solution and not only rely on the time offset broadcast in the navigation messages.

3.4 Aircraft-based augmentation system (ABAS)

Note.— Guidance on ABAS and associated signal processing is given in Attachment D, section 5.

3.4.1 ADVANCED RECEIVER AUTONOMOUS INTEGRITY MONITORING (ARAIM)

ARAIM shall consist of a non-aircraft subsystem and an aircraft subsystem. The non-aircraft subsystem shall provide, for each core satellite constellation supported, fault characteristics of the constellation, fault characteristics of the satellites and ranging error models. The aircraft subsystem shall apply the data provided by the non-aircraft subsystem, complemented as appropriate by fault characteristics and ranging error models of the aircraft subsystem components, to meet the requirements as specified in Chapter 3, 3.7.3.3.1.

Note 1.— The non-aircraft subsystem performs its function by providing integrity support data (ISD as specified below) either through broadcast navigation data or through default values stored in receiver memory. Broadcast navigation data for ARAIM can be contained either in dedicated navigation data messages (ISM as defined below) or in other navigation data messages from core satellite constellations.

Note 2.— For GNSS receivers using ARAIM, ranging error models include ionosphere, troposphere, multipath, antenna bias and receiver noise.

3.4.1.1 *Integrity support data (ISD) data content*

3.4.1.1.1 *ISD general information*. The ISD general information shall be as follows:

Validity time: this field shall specify when ISD can be applied by the GNSS receiver using ARAIM.

Applicable core satellite constellation: this field shall identify to which core satellite constellation the ISD applies.

ARAIM service type: this field shall indicate the performance level supported by the ISD parameters.

ARAIM service type A: the ISD supports horizontal positioning for typical operations of en-route, terminal, initial approach, intermediate approach, non-precisions approach and departure in accordance with Chapter 3, 3.7.3.3.1.

ARAIM service type B: reserved.

Note 1.— Aircraft manufacturers may integrate ARAIM with other ABAS system elements to support additional applications, subject to approval by the appropriate regulatory authority.

Note 2.— There may be multiple active sets of ISD per constellation (i.e. different data sets supporting different service types).

Note 3.— ARAIM service type B performance is expected to support typical operations of approach with vertical guidance through Category I precision approach.

3.4.1.1.2 *Constellation-specific ISD parameters.* The constellation-specific ISD shall be as follows:

Satellite mask: this field shall indicate to which satellite (within the given core satellite constellation) the ISD parameters apply.

Note.— The interpretation of the satellite mask by the ISMG and the aircraft receiver is specified in 3.4.1.2.2.2 and 3.4.1.3.3.2, respectively.

P_{const}: the probability that two or more satellites within a core satellite constellation have faulted signals concurrently due to a common cause.

P_{sat}: the probability that a satellite has a faulted signal, where the faulted signal occurs only on one satellite or has independent causes if occurring on more than one satellite.

R_{const}: the rate at which two or more satellites within a core satellite constellation have faulted signals concurrently due to a common cause.

R_{sat}: the rate at which individual satellites have a faulted signal, where the faulted signal occurs only on one satellite or has independent causes if occurring on more than one satellite.

MFD_{const}: the mean duration of faulted signals of two or more satellites within a core satellite constellation due to a common cause.

MFD_{sat}: the mean duration of individual satellites having a faulted signal.

σ_{URA}: the overbounding integrity range error model parameter to be applied for a given satellite signal.

σ_{URE}: the accuracy and continuity range error model parameter to be applied for a given satellite signal.

b_{nom}: the overbounding bias term for a given satellite signal.

Note 1.— A faulted signal and the associated fault event occurs when one or more signals indicated as healthy from a given satellite are in fact faulted as described in 3.4.1.2.2.1 and Attachment D, 5.3.1.3. A faulted signal ends through action by the core satellite constellation, either by removal of the cause of the fault or by indication that the affected satellite or satellites are not healthy.

Note 2.— ISD parameters apply to healthy signals.

Note 3.— Some core satellite constellation providers may use the term "mean time to notify" (MTTN or MTN) interchangeably with MFD.

Note 4.— More detailed explanations of the terms σ_{URA}, σ_{URE} and b_{nom}, are given in 3.4.1.2.2.1 and Attachment D, 5.3.1.4.

3.4.1.2 *ARAIM non-aircraft elements*

3.4.1.2.1 *ISD broadcast and application requirements*

Note.— These requirements determine how ISD are broadcast to the user by the core satellite constellations.

3.4.1.2.1.1 *Interface specifications for broadcast ISD*

The broadcast ISD shall be defined by the applicable core satellite constellation providers in interface specifications.

Note 1.— The interface specifications define on which signals and in which messages the ISD parameters are encoded.

Note 2.— For GPS, σ_{URA} and σ_{URE} are specified in IS-GPS-705F (message type 10 and message types 30 through 37) and in IS-GPS-200K (subframe 1).

Note 3.— ISM interface specifications for GPS, GLONASS and BDS are under development.

3.4.1.2.1.2 *ARAIM augmented satellite signals*

The ISD parameters shall apply to core satellite constellation signals as specified below:

– For GPS: GPS L1 C/A signal (3.1.1 and Chapter 3, 3.7.3.1.1.8) and GPS L5 signal (3.1.1 and Chapter 3, 3.7.3.1.1.8).

– For GLONASS: GLONASS L1OF signal (3.1.2 and Chapter 3, 3.7.3.1.2.8), GLONASS L1OC signal (3.1.2 and Chapter 3, 3.7.3.1.2.10) and GLONASS L3OC signal (3.1.2 and Chapter 3, 3.7.3.1.2.9).

– For Galileo: Galileo E1 signal (3.1.3.1.1 and Chapter 3, 3.7.3.1.3.8.1) and Galileo E5a signal (3.1.3.1.1 and Chapter 3, 3.7.3.1.3.8.2).

– For BDS: BDS B1C signal (3.1.4 and Chapter 3, 3.7.3.1.4.7) and BDS B2a signal (3.1.4 and Chapter 3, 3.7.3.1.4.7).

3.4.1.2.1.3 *ISD and ISM timing*

3.4.1.2.1.3.1 When a core satellite constellation broadcasts ISD, the core satellite constellation shall transmit and disseminate worldwide a complete set of broadcast ISD at a minimum broadcast rate (maximum repeat interval) of 15 minutes.

Note.— A complete set of broadcast ISD includes both the entire set of ISD within ISM(s) for a given service type, for all supported satellites and any associated ISD not contained in ISM (e.g. in other navigation data messages). This does not imply a requirement to broadcast ISD for all satellites of a specific core satellite constellation.

3.4.1.2.1.3.2 The validity time, as defined in 3.4.1.1.1, shall:

a) indicate the start time of ISD applicability; or

b) indicate a start time and an expiration time.

3.4.1.2.1.3.2.1 When no expiration time is provided, the ISMG shall update the broadcast ISD to maintain compliance with 3.4.1.2.2.1.

Note.— The core satellite constellation interface specifications for broadcast ISD (3.4.1.2.1.1) define the associated protocols for data application, including ISD updating.

3.4.1.2.1.3.3 For a default ISD as specified in 3.4.1.3.3.3, the validity time shall not expire as long as the data remains present in a receiver.

Note.— Default ISD values are based on core satellite constellation minimum performance commitments. They can only be modified by a change to these performance commitments. Airborne equipment maintenance action would be necessary to update these ISD parameters.

3.4.1.2.2 *ISM generator requirements (data content)*

Note.— The ISM generator (ISMG) is an entity separate from core satellite constellation provider and performing an air navigation service provider function limited to ARAIM. It is expected that close cooperation will exist between the two entities. Further guidance is contained in the Global Navigation Satellite System (GNSS) Manual *(Doc 9849).*

3.4.1.2.2.1 *Overbounding*

3.4.1.2.2.1.1 The ISMG shall ensure that default and broadcast ISD parameters are provided such that the fault-free ranging signal errors are left- and right-overbounded over an interval limited by a not-to-exceed (NTE) threshold, [-NTE, NTE] by the following:

a) for integrity: a gaussian distribution N(-b_{nom}, σURA) for left side overbounding and N(b_{nom}, σURA) for right side overbounding;

b) for accuracy and continuity (false alert or failed exclusion): a gaussian distribution N(0, σ_{URE}).

3.4.1.2.2.1.2 The ISMG shall ensure that P_{sat} and R_{sat} provide an upper bound of the probability and rate that an individual satellite broadcasts signals that cause ranging signal errors outside the interval [-NTE, NTE].

3.4.1.2.2.1.3 The ISMG shall ensure that P_{const} and R_{const} provide an upper bound of the probability and rate that more than one satellite concurrently broadcast signals due to a common cause that cause ranging signal errors outside the interval [-NTE, NTE].

Note 1.— Faulted signals are signals with ranging errors outside the interval [-NTE, NTE]. Fault-free signals are signals with ranging errors within the interval [-NTE, NTE]. ARAIM accounts for errors due to faulted signals through P_{const} and R_{const} and for errors due to fault-free signals through σ_{URA} and σ_{URE}. Further guidance is provided in Attachment D, 5.3.1.3 to 5.3.1.5.

Note 2.— Core satellite constellation service providers distinguish between fault-free and faulted ranging signals using a predefined core satellite constellation service provider NTE. By this definition, all signals with errors below the threshold are considered fault-free signals and all signals with errors that are above the threshold are considered faulted signals. Fault-free signals include ranging errors due to system-inherent properties as well as any faults characterized by a limited amplitude and frequency which maintain compliance with the overbounding conditions. The ISMG can use this definition to determine the overbounding parameters. However, the ISMG may consider errors below the core satellite constellation service provider NTE as faulted to improve σ_{URA}, provided that P_{sat}, P_{const}, R_{sat} and R_{const} still meet the requirement in 3.4.1.2.2.1.2 and 3.4.1.2.2.1.3.

Note 3.— For consistency with the Gaussian overbounding of fault-free signals, the NTE value is typically set to $k \times \sigma_{URA}$ where k corresponds to the inverse of the normal cumulative distribution function of $P_{sat}/2$. For example, for GPS and P_{sat} of 10^{-5}, the corresponding NTE is specified as 4.42 × σURA and 4.42 corresponds to the inverse of the normal cumulative distribution function of a probability of 0.5×10^{-5}. The division by two is because the fault magnitude can be positive or negative. Alternatively, the NTE can be a fixed value.

Note 4.— The ARAIM airborne algorithm will achieve the intended integrity risk when bnom and σURA bound the fault-free distribution and P_{sat}, R_{sat}, P_{const} and R_{const} characterize the faulted distributions for both single and dual frequency signal processing. The ARAIM airborne algorithm does not explicitly use NTE.

3.4.1.2.2.2 *Satellite mask*. The ISM generator shall ensure that all satellites set to valid in the ISD satellite mask meet the requirements in section 3.4.1.2.2.1 for the associated ISD content.

3.4.1.2.2.3 *R_{const}, P_{const}, and MFD_{const}*. If multiple ISM are provided for a given constellation and ARAIM service type, the R_{const}, P_{const} and MFD_{const} for a given validity time shall be the same.

3.4.1.2.2.4 *Relationship between ISD values and core satellite constellation provider minimum service commitments*. For Service Type A, broadcast ISD values as defined in 3.4.1.1 shall always be set to indicate a performance that is equal to or better than the default values specified in 3.4.1.3.3.3.

3.4.1.2.3 *ISD parameter integrity requirements*

3.4.1.2.3.1 The ISMG shall generate ISD for ARAIM service type A such that GNSS receivers using ARAIM can perform monitoring to meet a 10^{-7}/hour integrity risk using both single and dual frequency signal processing.

3.4.1.2.3.2 Procedures shall be put in place by the ISMG such that the integrity assurance process mitigates the effects of internal faults, to a level consistent with the supported ARAIM service type.

3.4.1.2.4 *ISM transmission / data integrity requirements*

3.4.1.2.4.1 The data integrity of the ISM parameters shall be maintained throughout the data chain from origination by the ISMG, handover to and broadcast to the user by the core satellite constellation to a level consistent with the supported ARAIM service type.

Note.— Further guidance on ISD parameter data integrity is provided in Attachment D, 5.3.1.7.

3.4.1.2.4.2 A core satellite constellation using cyclic redundancy checks (CRC) for ISM data integrity shall calculate the CRC in accordance with the requirements in 3.9.

Note.— Detailed user implementation guidance is provided in core satellite constellation interface documentation as specified in 3.4.1.2.1.1.

3.4.1.2.5 *Receiver design constraint assumptions for ISD generation*

3.4.1.2.5.1 The ISMG shall validate broadcast ISD assuming that the GNSS receiver using ARAIM is compliant with the following constraints when processing L1, L5, E1, E5a, B1C and B2a signals:

a) 3 dB bandwidth between 12 and 24 MHz centred around 1575.42 MHz and around 1176.45 MHz;

b) differential group delay not greater than 150 ns;

c) early minus late discriminator;

d) L1/E1/B1C correlator spacing between 0.08 and 0.12 chips;

e) L5/E5a/B2a correlator spacing between 0.9 chips and 1.1 chips;

f) frequency dependent gain roll-off of at least 24 dB per octave in the transition band until reaching a minimum attenuation to meet the performance objectives in the presence of interfering signals at the interference thresholds specified in 3.7;

g) maintain the minimum attenuation to meet the performance objectives in the presence of interfering signals at the out-of-band interference thresholds specified in 3.7;

h) filter centre frequencies around 1575.42 MHz and 1176.45 MHz within ±10% of the 3 dB bandwidth as specified in a).

Note.— The 0 dB level corresponds to the filter's normalized peak in-band response.

3.4.1.2.5.2 The ISMG shall validate broadcast ISD assuming that the GNSS receiver using ARAIM is compliant with the following constraints when processing L1OC and L3OC signals:

a) 3 dB radio frequency / intermediate frequency bandwidth between 12 and 24 MHz centred around 1600.995 MHz and around 1202.025 MHz;

b) differential group delay not greater than 150 ns;

c) early minus late discriminator;

d) L1OC correlator spacing between 0.08 and 0.12 L1 chips;

e) L3OC correlator spacing between 0.9 chips and 1.1 L5 chips;

f) frequency dependent gain roll-off of at least 24 dB per octave in the transition band until reaching a minimum attenuation to meet the performance objectives in the presence of interfering signals at the interference thresholds specified in 3.7;

g) maintain the minimum attenuation to meet the performance objectives in the presence of interfering signals at the out-of-band interference thresholds specified in 3.7;

h) filter centre frequencies around 1600.995 MHz and 1202.025 MHz within ±10% of the 3 dB bandwidth as specified in a).

Note.— The 0 dB level corresponds to the filter's normalized peak in-band response.

3.4.1.2.5.3 The ISMG shall validate broadcast ISD assuming that the GNSS receiver using ARAIM is compliant with the constraints in Table D-21 when processing L1OF signals.

3.4.1.2.6 *ISD provision requirements*

3.4.1.2.6.1 ISMG shall provide one of the following sets of ISD parameters:

– R_{sat}, P_{sat}; or

– R_{sat}, MFD_{sat}; or

– P_{sat}, R_{sat}, MFD_{sat}.

Note.— When P_{sat} is not provided, it can be derived from the following relationship: probability of fault = rate of fault × mean fault duration.

3.4.1.2.6.2 ISMG shall provide one of the following sets of ISD parameters:

– R_{const}, P_{const}; or

– R_{const}, MFD_{const}; or

– P_{const}, R_{const}, MFD_{const}.

Note.— When P_{const} is not provided, it can be derived from the following relationship: probability of fault = rate of fault × mean fault duration.

3.4.1.2.6.3 ISMG shall provide all ISD as defined in 3.4.1.1 to support the applicable ARAIM service type except as specified in 3.4.1.2.6.1 and 3.4.1.2.6.2.

Note.— ISD are provided either through core satellite constellation navigation data broadcast (as defined in 3.4.1.2.1.1) or as defaults as shown in 3.4.1.3.3.3.

3.4.1.2.6.4 The default and broadcast ISD parameters shall be valid for satellite elevation angles between 5 and 90 degrees, inclusive. When core satellite constellations identify a valid minimum elevation angle smaller than 5 degrees, the default and broadcast ISD parameters shall be valid from the minimum specified elevation angle to 90 degrees, inclusive. The elevation angle validity range shall be documented in the interface specifications as defined in 3.4.1.2.1.1.

3.4.1.3 *ARAIM aircraft elements*

3.4.1.3.1 General receiver processing requirements:

3.4.1.3.1.1 When a GNSS receiver using ARAIM processes core satellite constellation signals, it shall process the signals following the requirements as specified in 3.1.1.3.1 (GPS receiver) and/or 3.1.2.3.1 (GLONASS receiver) and/or 3.1.3.3.1 (Galileo receiver) and/or 3.1.4.3.1 (BDS receiver).

3.4.1.3.1.2 When a GNSS receiver using ARAIM processes core satellite constellation signals, it shall apply the protocols for data application as specified in 3.1.1.2 (GPS) and/or 3.1.2.2 (GLONASS) and/or 3.1.3.2 (Galileo) and/or 3.1.4.2 (BDS).

Note.— GNSS receivers using ARAIM only use core satellite constellation signals that indicate a healthy status.

3.4.1.3.2 *Design constraints for GNSS receivers using ARAIM*

3.4.1.3.2.1 GNSS receivers using ARAIM shall comply with the design constraints listed in section 3.4.1.2.5.

Note.— Future development may provide more flexibility on receiver design constraints.

3.4.1.3.3 *Application of ISD in ARAIM processing algorithms*

3.4.1.3.3.1 When processing broadcast ISD, GNSS receivers using ARAIM shall process ISD as specified in 3.4.1.2.1.1.

3.4.1.3.3.2 When processing ISM, GNSS receivers using ARAIM shall apply ISD consistent with its service type, validity time and applicable satellite mask.

3.4.1.3.3.3 *Default ISD*. GNSS receivers using ARAIM shall store the following default ISD:

Default ISD parameters

	GPS	GLONASS	Galileo	BDS
$P_{const,\ default}$	1×10^{-8}	1×10^{-4}	2×10^{-4}	6×10^{-5}
$P_{sat,\ default}$	1×10^{-5}	1×10^{-4}	3×10^{-5}	1×10^{-5}
$R_{const,\ default}$	1×10^{-8}/h	1×10^{-5}/h	1×10^{-4}/h	6×10^{-5}/h
$R_{sat,\ default}$	1×10^{-5}/h	3.4×10^{-5}/h	2×10^{-5}/h	1×10^{-5}/h
$MFD_{const,\ default}$	1 hour	10 hours	(Note 4)	1 hour
$MFD_{sat,\ default}$	1 hour	3 hours	(Note 4)	1 hour
$\sigma_{URA,\ default,\ dual\ frequency}$ [m]	IAURA (Note 3)	9	6	7
$\sigma_{URE,\ default,\ dual\ frequency}$ [m]	Nominal URA (Note 3)	8	4	7
$\sigma_{URA,\ default,\ single\ frequency}$ [m]	IAURA (Note 3)	9	6.5 (E1), 7.5 (E5a)	7
$\sigma_{URE,\ default,\ single\ frequency}$ [m]	Nominal URA (Note 3)	8	4.7 (E1), 6 (E5a)	7
$b_{nom,\ default}$ [m]	0	0	0	0

Note 1.— These values correspond to the core satellite constellation commitments (as shown in Attachment D, 5.3.2). They can only be modified by a change to these performance commitments.

Note 2.— Default ISD values have been validated using the receiver design assumptions listed in 3.4.1.2.5.

Note 3.— When CNAV data is available (GPS dual-frequency and L5-only, single-frequency modes), the IAURA is defined in Appendix B, 3.1.1.2.2.4.1, and the nominal URA is defined in IS-GPS-705F sections 20.3.3.1.1.4 (elevation dependent) and 20.3.3.2.4 (non-elevation dependent). If CNAV data is not available (L1-only, single-frequency mode), the IAURA and nominal URA are defined in Appendix B, 3.1.1.1.3.1.2.

Note 4.— Guidance information is provided in Attachment D, 5.3.2.3.

3.4.1.3.3.4 *Mixing satellites from the same constellation with default and broadcast ISD*

3.4.1.3.3.4.1 When GNSS receivers using ARAIM apply default ISD to some satellites and broadcast ISD to other satellites from the same core satellite constellation, the receiver shall use default ISD (3.4.1.3.3.3) for the parameters defined in 3.4.1.2.6.2 for all satellites from the corresponding core satellite constellation.

3.5 Satellite-based augmentation system (SBAS)

3.5.1 GENERAL

Note.— Geodetic parameters in this section are defined in WGS-84.

3.5.1.1 *SBAS system and service description*. SBAS shall consist of a non-aircraft subsystem and an aircraft subsystem. The SBAS non-aircraft subsystem shall provide data and corrections for the GNSS ranging signals over one or two GNSS frequencies broadcast from a satellite to the aircraft subsystem. The SBAS non-aircraft subsystem shall broadcast on the L1 frequency to support the L1 SBAS service and/or on the L5 frequency to support the DFMC SBAS service.

Note.— The SBAS non-aircraft subsystem may provide a single-frequency ranging signal on the SBAS L1 frequency or a dual-frequency ranging signal as a combination of the signals transmitted on the SBAS L1 and SBAS L5 frequencies.

3.5.1.2 *SBAS pseudo-range definition.*

3.5.1.2.1 *Carrier smoothing*. Carrier smoothing shall be defined by the following filter:

$$P_{CSC,k} = \alpha P_{meas} + (1 - \alpha) P_{proj}$$
$$P_{proj} = \left(P_{CSC,k-1} + \Delta \text{carrier\_range}\right)$$

where

$P_{CSC,k}$ = the carrier smoothed code pseudo-range at time k;
$P_{CSC,k-1}$ = the previous carrier smoothed code pseudo-range at time k-1;
P_{meas} = the measured pseudo-range as defined below;
$\Delta_{carrier\_range}$ = the change in carrier range as defined below, and
α = the filter weighting function equal to the sample interval divided by the smoothing time constant.

$$P_{meas} = \begin{cases} single\text{-}frequency: & P_{1,k} \\ ionosphere\text{-}free: & \dfrac{\gamma_{12}(P_{1,k}) - (P_{2,k})}{(\gamma_{12} - 1)} \end{cases}$$

where

$P_{n,k}$ = the raw pseudo-range of frequency n at time k; and
γ_{12} = the square of the ratio of frequency 1 to frequency 2;

$$\Delta_{\text{carrier\_range}} = \begin{cases} single\text{-}frequency: & (\varphi_{1,k} - \varphi_{1,k-1}) \\ ionosphere\text{-}free: & \dfrac{\gamma_{12}(\varphi_{1,k} - \varphi_{1,k-1}) - (\varphi_{2,k} - \varphi_{2,k-1})}{(\gamma_{12} - 1)} \end{cases}$$

where

$\varphi_{n,k}$ = the accumulated carrier in metres for frequency n at time k; and
$\varphi_{n,k-1}$ = the accumulated carrier in metres for frequency n at time k-1.

3.5.1.2.2 *Corrected pseudo-range*. The corrected pseudo-range for a given satellite i at time t is:

$$PR_{i,corrected} = P_{CSC,i} + TC_i + b_i$$

where

$P_{CSC,i}$ = the smoothed pseudo-range (defined in 3.5.1.1);
TC_i = the tropospheric correction (defined in 3.5.5.3 for SBAS); and
b_i = the clock correction.

3.5.2 SBAS L1 RF CHARACTERISTICS

3.5.2.1 *Carrier frequency stability*. The short-term stability of the carrier frequency (square root of the Allan Variance) at the output of the satellite transmit antenna shall be better than 5×10^{-11} over 1 to 10 seconds.

3.5.2.2 *Carrier phase noise*. The phase noise spectral density of the unmodulated carrier shall be such that a phase locked loop of 10 Hz one-sided noise bandwidth is able to track the carrier to an accuracy of 0.1 radian (1 sigma).

3.5.2.3 *Spurious emissions*. Spurious emissions shall be at least 40 dB below the unmodulated carrier power over all frequencies.

3.5.2.4 *Code/carrier frequency coherence*. The short-term (less than 10 seconds) fractional frequency difference between the code phase rate and the carrier frequency shall be less than 5×10^{-11} (standard deviation). Over the long term (less than 100 seconds), the difference between the change in the broadcast code phase, converted to carrier cycles by multiplying the number of code chips by 1 540, and the change in the broadcast carrier phase, in cycles, shall be within one carrier cycle (standard deviation).

Note.— This applies to the output of the satellite transmit antenna and does not include code/carrier divergence due to ionospheric refraction in the downlink propagation path.

3.5.2.5 *Correlation loss*. The loss in the recovered signal power due to imperfections in the signal modulation and waveform distortion shall not exceed 1 dB.

Note.— The loss in signal power is the difference between the broadcast power in a 2.046 MHz bandwidth and the signal power recovered by a noise-free, loss-free receiver with 1-chip correlator spacing and a 2.046 MHz bandwidth.

3.5.2.6 *Maximum code phase deviation*. The maximum uncorrected code phase of the L1 broadcast signal shall not deviate from the equivalent SBAS network time (SNT) for L1 SBAS by more than $\pm 2^{-20}$ seconds.

3.5.2.7 *Code/data coherence*. Each 2-millisecond symbol shall be synchronous with every other code epoch.

3.5.2.8 *Message synchronization*. The leading edge of the first symbol that depends on the first bit of the current message shall be broadcast from the SBAS satellite synchronous with a 1-second epoch of SNT for L1 SBAS.

3.5.2.9 *Convolutional encoding*. A 250-bit-per-second data stream shall be encoded at a rate of 2 symbols per bit using a convolutional code with a constraint length of 7 to yield 500 symbols per second. The convolutional encoder logic arrangement shall be as illustrated in Figure B-24 with the G3 output selected for the first half of each 4-millisecond data bit period.

3.5.2.10 *Pseudo-random noise (PRN) codes*. Each PRN code shall be a 1 023-bit Gold code which is itself the Modulo-2 addition of two 1 023-bit linear patterns, G1 and $G2_i$. The $G2_i$ sequence shall be formed by delaying the G2 sequence by the associated integer number of chips as illustrated in Table B-61. Each of the G1 and G2 sequences shall be defined as the output of stage 10 of a 10-stage shift register, where the input to the shift register is the Modulo-2 addition of the following stages of the shift register:

a) G1: stages 3 and 10; and

b) G2: stages 2, 3, 6, 8, 9 and 10.

The initial state for the G1 and G2 shift registers shall be “1111111111”.

Table B-61. SBAS L1 PRN codes

PRN code number	*G2 delay (chips)*	*First 10 SBAS chips (Leftmost bit represents first transmitted chip, binary)*
120	145	0110111001
121	175	0101011110
122	52	1101001000
123	21	1101100101
124	237	0001110000
125	235	0111000001
126	886	0000001011
127	657	1000110000
128	634	0010100101
129	762	0101010111
130	355	1100011110
131	1 012	1010010110
132	176	1010101111
133	603	0000100110
134	130	1000111001
135	359	0101110001
136	595	1000011111
137	68	0111111000
138	386	1011010111
139	797	1100111010
140	456	0001010100

PRN code number	*G2 delay (chips)*	*First 10 SBAS chips (Leftmost bit represents first transmitted chip, binary)*
141	499	0011110110
142	883	0001011011
143	307	0100110101
144	127	0111001111
145	211	0010001111
146	121	1111100010
147	118	1100010010
148	163	1100100010
149	628	0101010011
150	853	0111011110
151	484	1110011101
152	289	0001011110
153	811	0010111011
154	202	1000010110
155	1021	0000000011
156	463	1110111000
157	568	0110010100
158	904	0010011101

3.5.3 DATA STRUCTURE ON SBAS L1 SIGNAL

Note.— Messages broadcast on SBAS L1 signal are independent of those broadcast on SBAS L5 signal. Information broadcast on SBAS L1 signal is used only for the L1 SBAS service using GPS L1 C/A and GLONASS L1OF (FDMA signal).

3.5.3.1 *Format summary*. All messages shall consist of a message type identifier, a preamble, a data field and a cyclic redundancy check as illustrated in Figure B-25.

3.5.3.2 *Preamble*. For L1, the preamble shall consist of the sequence of bits “01010011 10011010 11000110”, distributed over three successive blocks. The start of every other 24-bit preamble shall be synchronous with a 6-second GPS subframe epoch.

3.5.3.3 *Message type identifier*. The L1 message type identifier shall be a 6-bit value identifying the message type (Types 0 to 63) as defined in Table B-62. The message type identifier shall be transmitted MSB first.

3.5.3.4 *Data field*. The L1 data field shall be 212 bits as defined in 3.5.6. Each data field parameter shall be transmitted MSB first.

3.5.3.5 *Cyclic redundancy check (CRC)*. The SBAS message CRC code on L1 shall be calculated in accordance with 3.9.

3.5.3.5.1 The length of the CRC code shall be k = 24 bits.

3.5.3.5.2 The CRC generator polynomial shall be:

$$G(x) = x^{24} + x^{23} + x^{18} + x^{17} + x^{14} + x^{11} + x^{10} + x^{7} + x^{6} + x^{5} + x^{4} + x^{3} + x + 1$$

Table B-62. L1 broadcast message types

L1 Message type	*Contents*
0	"Do Not Use" (SBAS test mode) – content applies to L1 SBAS service only
1	PRN mask
2 to 5	Fast corrections
6	Integrity information
7	Fast correction degradation factor
8	Spare
9	GEO ranging function parameters
10	Degradation parameters
11	Spare
12	SBAS network time/UTC offset parameters
13 to 16	Spare
17	GEO satellite almanacs
18	Ionospheric grid point masks
19 to 23	Spare
24	Mixed fast/long-term satellite error corrections
25	Long-term satellite error corrections
26	Ionospheric delay corrections
27	SBAS service message
28	Clock-ephemeris covariance matrix
29 to 61	Spare
62	Reserved – content applies to L1 SBAS service only
63	Null message – content applies to L1 SBAS service only

Note.— L1 messages (Table B-62) are for use with L1 SBAS service and L5 messages (Table B-98) are for use with DFMC SBAS service. Types 0, 62 and 63 messages are used independently by both L1 SBAS and DFMC SBAS services and their contents only apply to their service.

3.5.3.5.3 The CRC information field, M(x), shall be:

$$M(x)=\sum_{i=1}^{226} m_i x^{226-i} = m_1 x^{225} + m_2 x^{224} + \cdots + m_{226} x^0$$

3.5.3.5.4 M(x) shall be formed from the 8-bit SBAS message preamble, 6-bit message type identifier, and 212-bit data field. Bits shall be arranged in the order transmitted from the SBAS satellite, such that m1 corresponds to the first transmitted bit of the preamble, and m_{226} corresponds to bit 212 of the data field.

3.5.3.5.5 The CRC code r-bits shall be ordered such that r_1 is the first bit transmitted and r_{24} is the last bit transmitted.

3.5.4 L1 SBAS DATA CONTENT

3.5.4.1 *PRN mask parameters*. PRN mask parameters shall be as follows:

PRN code number: a number that uniquely identifies the satellite PRN code and related assignments as shown in Table B-63.

PRN mask: 210 PRN mask values that correspond to satellite PRN code numbers. The mask shall set up to 51 of the 210 PRN mask values.

Note.— The first transmitted bit of the PRN mask corresponds to PRN code number 1.

Table B-63. PRN code number assignments

PRN code number	*Assignment*
1 – 37	GPS
38 – 61	GLONASS slot number plus 37
62 – 119	Spare
120 – 158	SBAS
159 – 210	Spare

PRN mask value: a bit in the PRN mask indicating whether data are provided for the associated satellite PRN code number (1 to 210).

Coding: 0 = data not provided
1 = data provided

PRN mask number: the sequence number (1 to 51) of the mask values set in the PRN mask.

Note.— The PRN mask number is "1" for the lowest satellite PRN number for which the PRN mask value is "1".

Issue of data — PRN (IODP): an indicator that associates the correction data with a PRN mask.

Note.— Parameters are broadcast in the following messages:

a) PRN mask (consisting of 210 PRN mask values) in Type 1 message;

b) PRN mask number in Type 24, 25 and 28 messages;

c) PRN code number in Type 17 message; and

d) IODP in Type 1 to 5, 7, 24, 25 and 28 messages.

3.5.4.2 *Geostationary orbit (GEO) ranging function parameters*. GEO ranging function parameters shall be as follows:

$t_{0,GEO}$: the reference time for the GEO ranging function data, expressed as time of day.

$[X_G Y_G Z_G]$: the position of the GEO at time $t_{0,GEO}$.

$[\dot{X}_G \dot{Y}_G \dot{Z}_G]$: the velocity of the GEO at time $t_{0,GEO}$.

$[\ddot{X}_G \ddot{Y}_G \ddot{Z}_G]$: the acceleration of the GEO at time $t_{0,GEO}$.

a_{Gf0}: the time offset of the GEO clock with respect to SNT for L1 SBAS, defined at $t_{0,GEO}$.

a_{Gf1}: the drift rate of the GEO clock with respect to SNT for L1 SBAS.

User range accuracy (URA): an indicator of the root-mean-square ranging error, excluding atmospheric effects, as described in Table B-64.

Note.— All parameters are broadcast in Type 9 message.

Table B-64. User range accuracy

URA	Accuracy (rms)
0	2 m
1	2.8 m
2	4 m
3	5.7 m
4	8 m
5	11.3 m
6	16 m
7	32 m
8	64 m
9	128 m
10	256 m
11	512 m
12	1 024 m
13	2 048 m
14	4 096 m
15	“Do Not Use”

Note.— URA values 0 to 14 are not used in the protocols for data application (3.5.5). Airborne receivers will not use the GEO ranging function if URA indicates “Do Not Use” (3.5.8.3).

3.5.4.3 *GEO almanac parameters*. GEO almanac parameters shall be as follows:

PRN code number: see 3.5.4.1.

Health and status: an indication of the functions provided by the SBAS. The service provider identifiers are shown in Table B-65.

Coding:	Bit 0 (LSB)	Ranging	On (0)	Off (1)
	Bit 1	Precision corrections	On (0)	Off (1)
	Bit 2	Satellite status and basic corrections	On (0)	Off (1)
	Bits 3	Spare		
	Bits 4 to 7	Service provider identifier		

$[X_{G,A}Y_{G,A}Z_{G,A}]$: the position of the GEO at time $t_{almanac}$.

$[\dot{X}_{G,A}\dot{Y}_{G,A}\dot{Z}_{G,A}]$:the velocity of the GEO at time $t_{almanac}$.

$t_{almanac}$: the reference time for the GEO almanac data, expressed as time of day.

Note.— All parameters are broadcast in Type 17 message.

3.5.4.4 *SATELLITE CORRECTION BROADCAST PARAMETERS*

3.5.4.4.1 Long-term correction parameters shall be as follows:

Issue of data (IOD_i): an indicator that associates the long-term corrections for the ith satellite with the ephemeris data broadcast by that satellite.

Note 1.— For GPS, the IOD_i matches the IODE and 8 LSBs of the IODC (3.1.1.3.1.4 and 3.1.1.3.2.2).

Note 2.— For GLONASS, the IOD_i indicates a period of time that GLONASS data are to be used with SBAS data. It consists of two fields as shown in Table B-66.

δ_{xi}: for satellite i, the ephemeris correction for the x axis.

δ_{yi}: for satellite i, the ephemeris correction for the y axis.

δ_{zi}: for satellite i, the ephemeris correction for the z axis.

$\delta_{ai,f0}$: for satellite i, the ephemeris time correction.

$\delta\dot{x}_i$: for satellite i, ephemeris velocity correction for x axis.

$\delta\dot{y}_i$: for satellite i, ephemeris velocity correction for y axis.

$\delta\dot{z}_i$: for satellite i, ephemeris velocity correction for z axis.

$\delta_{ai,f1}$: for satellite i, rate of change of the ephemeris time correction.

$t_{i,LT}$: the time of applicability of the parameters δx_i, δy_i, δz_i, $\delta a_{i,f0}$, $\delta\dot{x}_i$, $\delta\dot{y}_i$, $\delta\dot{z}_i$ and $\delta a_{i,f1}$, expressed in seconds of day.

Velocity code: an indicator of the message format broadcast (Table B-86 and Table B-87).

Coding: 0 = $\delta\dot{x}_i$, $\delta\dot{y}_i$, $\delta\dot{z}_i$ and $\delta a_{i,f1}$ are not broadcast.

1 = $\delta\dot{x}_i$, $\delta\dot{y}_i$, $\delta\dot{z}_i$ and $\delta a_{i,f1}$ are broadcast.

Note.— All parameters are broadcast in Type 24 and 25 messages.

Table B-65. SBAS service provider identifiers

Identifier	*Service provider*
0	WAAS
1	EGNOS
2	MSAS
3	GAGAN
4	SDCM
5	BDSBAS
6	KASS
7	ANGA
8	SouthPAN
9	Reserved for SBAS
10	PAK-SBAS
11 to 13	Reserved for SBAS
14, 15	Reserved
16 to 31	Reserved for SBAS provider supporting DFMC SBAS only

Note 1.— A service provider ID of 14 is used for GBAS and is not applicable to SBAS.

Note 2.— Service provider IDs of 16 to 31 cannot be coded in the L1 SBAS message.

Table B-66. IOD_i for GLONASS satellites

MSB	LSB
Validity interval (5 bits)	Latency time (3 bits)

3.5.4.4.2 Fast correction parameters shall be as follows:

Fast correction (FC_i): for satellite *i*, the pseudo-range correction for rapidly varying errors, other than tropospheric or ionospheric errors, to be added to the pseudo-range after application of the long-term correction.

Note.— The user receiver applies separate tropospheric corrections (3.5.8.4.2 and 3.5.8.4.3).

Fast correction type identifier: an indicator (0, 1, 2, 3) of whether the Type 24 message contains the fast correction and integrity data associated with the PRN mask numbers from Type 2, Type 3, Type 4 or Type 5 messages, respectively.

Issue of data-fast correction ($IODF_j$): an indicator that associates $UDREI_{is}$ with fast corrections. The index *j* shall denote the message type (j = 2 to 5) to which $IODF_j$ applies (the fast correction type identifier +2).

Note.— The fast correction type identifier is broadcast in Type 24 messages. The FC_i are broadcast in Type 2 to 5, and Type 24 messages. The $IODF_j$ are broadcast in Type 2 to 6, and Type 24 messages.

3.5.4.5 *Fast and long-term correction integrity parameters*. Fast and long-term correction integrity parameters shall be as follows:

$UDREI_i$: an indicator that defines the $\sigma^2_{i,UDRE}$ for satellite *i* as described in Table B-67.

Model variance of residual clock and ephemeris errors ($\sigma^2_{i,UDRE}$): the variance of a normal distribution associated with the user differential range errors for satellite *i* after application of fast and long-term corrections, excluding atmospheric effects and used in horizontal protection level/vertical protection level computations (3.5.5.6).

Note.— All parameters are broadcast in Type 2 to 6, and Type 24 messages.

3.5.4.6 *Ionospheric correction parameters*. Ionospheric correction parameters shall be as follows:

IGP mask: a set of 11 ionospheric grid point (IGP) band masks defined in Table B-68.

IGP band mask: a set of IGP mask values which correspond to all IGP locations in one of the 11 IGP bands defined in Table B-68.

Table B-67. Evaluation of $UDREI_i$

$UDREI_i$	$\sigma^2_{i,UDRE}$
0	0.0520 m^2
1	0.0924 m^2
2	0.1444 m^2
3	0.2830 m^2
4	0.4678 m^2
5	0.8315 m^2
6	1.2992 m^2
7	1.8709 m^2
8	2.5465 m^2
9	3.3260 m^2
10	5.1968 m^2
11	20.7870 m^2
12	230.9661 m^2
13	2 078.695 m^2

$UDREI_i$	$\sigma^2_{i,UDRE}$
14	"Not Monitored"
15	"Do Not Use"

IGP mask value: a bit indicating whether data are provided within that IGP band for the associated IGP.

Coding: 0 = data are not provided

1 = data are provided

Number of IGP bands: the number of IGP band masks being broadcast.

IGP band identifier: the number identifying the ionospheric band as defined in Table B-68.

IGP block identifier: the identifier of the IGP block. The IGP blocks are defined by dividing into groups of 15 IGPs the sequence of IGPs within an IGP band mask which have IGP mask values of "1". The IGP blocks are numbered in an order of IGP mask value transmission, starting with "0".

Validity interval (V): the time interval for which the GLONASS ephemeris data are applicable (coded with an offset of 30 s) as described in Table B-69.

Latency time (L): the time interval between the time the last GLONASS ephemeris has been received by the ground segment and the time of transmission of the first bit of the long-term correction message at the GEO(t_{ltc}) as described in Table B-30.

$IODI_k$: an indication of when the kth IGP band mask changes.

IGP vertical delay estimate: an estimate of the delay induced for a signal at 1 575.42 MHz if it traversed the ionosphere vertically at the IGP.

Coding: The bit pattern "111111111" indicates "Do Not Use".

$GIVEI_i$: an indicator that defines the $\sigma^2_{i,GIVE}$ as described in Table B-71.

Model variance of residual ionospheric errors ($\sigma^2_{i,GIVE}$): the variance of a normal distribution associated with the residual ionospheric vertical error at the IGP for an L1 signal.

Note.— All parameters are broadcast in Type 18 and Type 26 messages.

Table B-68. IGP locations and band numbers

IGP location		Transmission order in IGP band mask
Band 0		
180 W	75S, 65S, 55S, 50S, 45S, ..., 45N, 50N, 55N, 65N, 75N, 85N	1 – 28
175 W	55S, 50S, 45S, ..., 45N, 50N, 55N	29 – 51
170 W	75S, 65S, 55S, 50S, 45S, ..., 45N, 50N, 55N, 65N, 75N	52 – 78
165 W	55S, 50S, 45S, ..., 45N, 50N, 55N	79 – 101
160 W	75S, 65S, 55S, 50S, 45S, ..., 45N, 50N, 55N, 65N, 75N	102 – 128
155 W	55S, 50S, 45S, ..., 45N, 50N, 55N	129 – 151
150 W	75S, 65S, 55S, 50S, 45S, ..., 45N, 50N, 55N, 65N, 75N	152 – 178
145 W	55S, 50S, 45S, ..., 45N, 50N, 55N	179 – 201
Band 1		
140 W	85S, 75S, 65S, 55S, 50S, 45S, ..., 45N, 50N, 55N, 65N, 75N	1 – 28
135 W	55S, 50S, 45S, ..., 45N, 50N, 55N	29 – 51
130 W	75S, 65S, 55S, 50S, 45S, ..., 45N, 50N, 55N, 65N, 75N	52 – 78
125 W	55S, 50S, 45S, ..., 45N, 50N, 55N	79 – 101
120 W	75S, 65S, 55S, 50S, 45S, ..., 45N, 50N, 55N, 65N, 75N	102 – 128
115 W	55S, 50S, 45S, ..., 45N, 50N, 55N	129 – 151
110 W	75S, 65S, 55S, 50S, 45S, ..., 45N, 50N, 55N, 65N, 75N	152 – 178
105 W	55S, 50S, 45S, ..., 45N, 50N, 55N	179 – 201
Band 2		
100 W	75S, 65S, 55S, 50S, 45S, ..., 45N, 50N, 55N, 65N, 75N	1 – 27
95 W	55S, 50S, 45S, ..., 45N, 50N, 55N	28 – 50
90 W	75S, 65S, 55S, 50S, 45S, ..., 45N, 50N, 55N, 65N, 75N, 85N	51 – 78
85 W	55S, 50S, 45S, ..., 45N, 50N, 55N	79 – 101
80 W	75S, 65S, 55S, 50S, 45S, ..., 45N, 50N, 55N, 65N, 75N	102 – 128
75 W	55S, 50S, 45S, ..., 45N, 50N, 55N	129 – 151
70 W	75S, 65S, 55S, 50S, 45S, ..., 45N, 50N, 55N, 65N, 75N	152 – 178
65 W	55S, 50S, 45S, ..., 45N, 50N, 55N	179 – 201
Band 3		
60 W	75S, 65S, 55S, 50S, 45S, ..., 45N, 50N, 55N, 65N, 75N	1 – 27
55 W	55S, 50S, 45S, ..., 45N, 50N, 55N	28 – 50
50 W	85S, 75S, 65S, 55S, 50S, 45S, ..., 45N, 50N, 55N, 65N, 75N	51 – 78
45 W	55S, 50S, 45S, ..., 45N, 50N, 55N	79 – 101
40 W	75S, 65S, 55S, 50S, 45S, ..., 45N, 50N, 55N, 65N, 75N	102 – 128
35 W	55S, 50S, 45S, ..., 45N, 50N, 55N	129 – 151
30 W	75S, 65S, 55S, 50S, 45S, ..., 45N, 50N, 55N, 65N, 75N	152 – 178

IGP location		Transmission order in IGP band mask
25 W	55S, 50S, 45S, ..., 45N, 50N, 55N	179 – 201
Band 4		
20 W	75S, 65S, 55S, 50S, 45S, ..., 45N, 50N, 55N, 65N, 75N	1 – 27
15 W	55S, 50S, 45S, ..., 45N, 50N, 55N	28 – 50
10 W	75S, 65S, 55S, 50S, 45S, ..., 45N, 50N, 55N, 65N, 75N	51 – 77
5 W	55S, 50S, 45S, ..., 45N, 50N, 55N	78 – 100
0	75S, 65S, 55S, 50S, 45S, ..., 45N, 50N, 55N, 65N, 75N, 85N	101 – 128
5 E	55S, 50S, 45S, ..., 45N, 50N, 55N	129 – 151
10 E	75S, 65S, 55S, 50S, 45S, ..., 45N, 50N, 55N, 65N, 75N	152 – 178
15 E	55S, 50S, 45S, ..., 45N, 50N, 55N	179 – 201
Band 5		
20 E	75S, 65S, 55S, 50S, 45S, ..., 45N, 50N, 55N, 65N, 75N	1 – 27
25 E	55S, 50S, 45S, ..., 45N, 50N, 55N	28 – 50
30 E	75S, 65S, 55S, 50S, 45S, ..., 45N, 50N, 55N, 65N, 75N	51 – 77
35 E	55S, 50S, 45S, ..., 45N, 50N, 55N	78 – 100
40 E	85S, 75S, 65S, 55S, 50S, 45S, ..., 45N, 50N, 55N, 65N, 75N	101 – 128
45 E	55S, 50S, 45S, ..., 45N, 50N, 55N	129 – 151
50 E	75S, 65S, 55S, 50S, 45S, ..., 45N, 50N, 55N, 65N, 75N	152 – 178
55 E	55S, 50S, 45S, ..., 45N, 50N, 55N	179 – 201
Band 6		
60 E	75S, 65S, 55S, 50S, 45S, ..., 45N, 50N, 55N, 65N, 75N	1 – 27
65 E	55S, 50S, 45S, ..., 45N, 50N, 55N	28 – 50
70 E	75S, 65S, 55S, 50S, 45S, ..., 45N, 50N, 55N, 65N, 75N	51 – 77
75 E	55S, 50S, 45S, ..., 45N, 50N, 55N	78 – 100
80 E	75S, 65S, 55S, 50S, 45S, ..., 45N, 50N, 55N, 65N, 75N	101 – 127
85 E	55S, 50S, 45S, ..., 45N, 50N, 55N	128 – 150
90 E	75S, 65S, 55S, 50S, 45S, ..., 45N, 50N, 55N, 65N, 75N, 85N	151 – 178
95 E	55S, 50S, 45S, ..., 45N, 50N, 55N	179 – 201
Band 7		
100 E	75S, 65S, 55S, 50S, 45S, ..., 45N, 50N, 55N, 65N, 75N	1 – 27
105 E	55S, 50S, 45S, ..., 45N, 50N, 55N	28 – 50
110 E	75S, 65S, 55S, 50S, 45S, ..., 45N, 50N, 55N, 65N, 75N	51 – 77
115 E	55S, 50S, 45S, ..., 45N, 50N, 55N	78 – 100
120 E	75S, 65S, 55S, 50S, 45S, ..., 45N, 50N, 55N, 65N, 75N	101 – 127
125 E	55S, 50S, 45S, ..., 45N, 50N, 55N	128 – 150
130 E	85S, 75S, 65S, 55S, 50S, 45S, ..., 45N, 50N, 55N, 65N, 75N	151 – 178
135 E	55S, 50S, 45S, ..., 45N, 50N, 55N	179 – 201

IGP location		Transmission order in IGP band mask
Band 8		
140 E	75S, 65S, 55S, 50S, 45S, ..., 45N, 50N, 55N, 65N, 75N	1 – 27
145 E	55S, 50S, 45S, ..., 45N, 50N, 55N	28 – 50
150 E	75S, 65S, 55S, 50S, 45S, ..., 45N, 50N, 55N, 65N, 75N	51 – 77
155 E	55S, 50S, 45S, ..., 45N, 50N, 55N	78 – 100
160 E	75S, 65S, 55S, 50S, 45S, ..., 45N, 50N, 55N, 65N, 75N	101 – 127
165 E	55S, 50S, 45S, ..., 45N, 50N, 55N	128 – 150
170 E	75S, 65S, 55S, 50S, 45S, ..., 45N, 50N, 55N, 65N, 75N	151 – 177
175 E	55S, 50S, 45S, ..., 45N, 50N, 55N	178 – 200
Band 9		
60 N	180W, 175W, 170W, …, 165E, 170E, 175E	1 – 72
65 N	180W, 170W, 160W, …, 150E, 160E, 170E	73 – 108
70 N	180W, 170W, 160W, …, 150E, 160E, 170E	109 – 144
75 N	180W, 170W, 160W, …, 150E, 160E, 170E	145 – 180
85 N	180W, 150W, 120W, …, 90E, 120E, 150E	181 – 192
Band 10		
60 S	180W, 175W, 170W, …, 165E, 170E, 175E	1 – 72
65 S	180W, 170W, 160W, …, 150E, 160E, 170E	73 – 108
70 S	180W, 170W, 160W, …, 150E, 160E, 170E	109 – 144
75 S	180W, 170W, 160W, …, 150E, 160E, 170E	145 – 180
85 S	170W, 140W, 110W, …, 100E, 130E, 160E	181 – 192

Table B-69. Validity interval

Data	*Bits used*	*Range of values*	*Resolution*
Validity interval (V)	5	30 s to 960 s	30 s

Table B-70. Latency time

Data	*Bits used*	*Range of values*	*Resolution*
Latency time (L)	3	0 s to 120 s	30 s

Table B-71. Evaluation of GIVEIi

$GIVEI_i$	$\sigma^2_{i,GIVE}$
0	0.0084 m^2
1	0.0333 m^2
2	0.0749 m^2
3	0.1331 m^2
4	0.2079 m^2
5	0.2994 m^2
6	0.4075 m^2
7	0.5322 m^2
8	0.6735 m^2
9	0.8315 m^2
10	1.1974 m^2
11	1.8709 m^2
12	3.3260 m^2
13	20.787 m^2
14	187.0826 m^2
15	"Not Monitored"

3.5.4.7 *Degradation parameters*. Degradation parameters, whenever used, shall be as follows:

Fast correction degradation factor indicator (ai_i): an indicator of the fast correction degradation factor (a_i) for the ith satellite as described in Table B-72.

Note.— The ai_i is also used to define the time-out interval for fast corrections, as described in 3.5.8.1.2.

System latency time (t_{lat}): the time interval between the origin of the fast correction degradation and the user differential range estimate indicator (UDREI) reference time.

B_{rrc}: a parameter that bounds the noise and round-off errors when computing the range rate correction degradation as in 3.5.5.6.2.2.

C_{ltc_lsb}: the maximum round-off error due to the resolution of the orbit and clock information.

C_{ltc_v1}: the velocity error bound on the maximum range rate difference of missed messages due to clock and orbit rate differences.

I_{ltc_v1}: the update interval for long-term corrections if velocity code = 1 (3.5.4.4.1).

C_{ltc_v0}: a parameter that bounds the difference between two consecutive long-term corrections for satellites with a velocity code = 0.

I_{ltc_v0}: the minimum update interval for long-term messages if velocity code = 0 (3.5.4.4.1).

C_{GEO_lsb}: the maximum round-off error due to the resolution of the orbit and clock information.

C_{GEO_v}: the velocity error bound on the maximum range rate difference of missed messages due to clock and orbit rate differences.

I_{GEO}: the update interval for GEO ranging function messages.

Table B-72. Fast correction degradation factor

Fast correction degradation factor indicator (ai_i)	*Fast correction degradation factor (a_i)*
0	0.0 mm/s^2
1	0.05 mm/s^2
2	0.09 mm/s^2
3	0.12 mm/s^2
4	0.15 mm/s^2
5	0.20 mm/s^2
6	0.30 mm/s^2
7	0.45 mm/s^2
8	0.60 mm/s^2
9	0.90 mm/s^2
10	1.50 mm/s^2
11	2.10 mm/s^2
12	2.70 mm/s^2
13	3.30 mm/s^2
14	4.60 mm/s^2
15	5.80 mm/s^2

C_{er}: the bound on the residual error associated with using data beyond the precision approach/approach with vertical guidance time-out.

C_{iono_step}: the bound on the difference between successive ionospheric grid delay values.

I_{iono}: the minimum update interval for ionospheric correction messages.

$C_{iono\ ramp}$: the rate of change of the ionospheric corrections.

RSS_{UDRE}: the root-sum-square flag for fast and long-term correction residuals.

Coding: 0 = correction residuals are linearly summed

1 = correction residuals are root-sum-squared

RSS_{iono}: the root-sum-square flag for ionospheric residuals.

Coding: 0 = correction residuals are linearly summed

1 = correction residuals are root-sum-squared

$C_{covariance}$: the term which is used to compensate for quantization effects when using the Type 28 message.

Note 1.— The parameters ai and tlat are broadcast in Type 7 message. All other parameters are broadcast in Type 10 message.

Note 2.— If message Type 28 is not broadcast, Ccovariance is not applicable.

3.5.4.8 Time parameters. Time parameters, whenever used, shall be as follows:

UTC standard identifier: an indication of the UTC reference source as defined in Table B-73.

GPS time-of-week count: the number of seconds that have passed since the transition from the previous GPS week (similar to the GPS parameter in 3.1.1.2.6.1 but with a 1-second resolution).

Table B-73. UTC standard identifier

UTC standard identifier	*UTC standard*
0	UTC as operated by the National Institute of Information and Communications Technology, Tokyo, Japan
1	UTC as operated by the U.S. National Institute of Standards and Technology
2	UTC as operated by the U.S. Naval Observatory
3	UTC as operated by the Observatoire de Paris
4	Reserved for UTC as operated by a European laboratory
5	UTC as operated by the National Time Service Center, Chinese Academy of Sciences
6	Reserved
7	UTC not provided
8 to 15	Reserved for DFMC SBAS only

Note.— UTC standard identifiers of 8 to 15 cannot be coded in the L1 SBAS message.

GPS week number (week count): see 3.1.1.2.6.2.

GLONASS indicator: a flag indicating if GLONASS time parameters are provided.

Coding: 0 = GLONASS time parameters are not provided

1 = GLONASS time parameters are provided

GLONASS time offset L1 ($\delta a_{i,GLONASS}$): A parameter broadcast on L1 that represents the stable part of the offset between the L1 GLONASS time and the L1 SBAS network time.

Note.— If L1 SBAS does not support GLONASS, $\delta a_{i,GLONASS}$ is not applicable.

UTC parameters: A_{1SNT}, A_{0SNT}, t_{0t}, WN_t, Δt_{LS}, WN_{LSF}, DN and Δt_{LSF} are as described in 3.1.1.3.3.6, with the exception that the SBAS parameters relate SNT to UTC time, rather than GPS time.

Note.— All parameters are broadcast in Type 12 message.

3.5.4.9 *Service region parameters*. Service region parameters shall be as follows:

Issue of data, service (IODS): an indication of a change of the service provided in the region.

Number of service messages: the number of different Type 27 SBAS service messages being broadcast. (Value is coded with an offset of 1.)

Service message number: a sequential number identifying the message within the currently broadcast set of Type 27 messages (from 1 to number of service messages, coded with an offset of 1).

Number of regions: the number of service regions for which coordinates are broadcast in the message.

Priority code: an indication of a message precedence if two messages define overlapping regions. The message with a higher value of priority code takes precedence. If priority codes are equal, the message with the lower δUDRE takes precedence.

δUDRE indicator-inside: an indication of regional UDRE degradation factor (δUDRE) applicable at locations inside any region defined in the message, in accordance with Table B-74.

δUDRE indicator-outside: an indication of regional UDRE degradation factor (δUDRE) applicable at locations outside all regions defined in all current Type 27 messages, in accordance with Table B-74.

Coordinate latitude: the latitude of one corner of a region.

Coordinate longitude: the longitude of one corner of a region.

Region shape: an indication of whether a region is a triangle or quadrangle.

Coding: 0 = triangle
1 = quadrangle

Note 1.— Coordinate 3 has Coordinate 1 latitude and Coordinate 2 longitude. If region is a quadrangle, Coordinate 4 has Coordinate 2 latitude and Coordinate 1 longitude. Region boundary is formed by joining coordinates in the sequence 1 2-3-1 (triangle) or 1-3-2-4-1 (quadrangle). Boundary segments have either constant latitude, constant longitude, or constant slope in degrees of latitude per degree of longitude. The change in latitude or longitude along any boundary segment between two coordinates is less than ±180 degrees.

Note 2.— All parameters are broadcast in Type 27 message.

Table B-74. δUDRE indicator evaluation

δUDRE indicator	*δUDRE*
0	1
1	1.1
2	1.25
3	1.5
4	2
5	3
6	4
7	5
8	6
9	8
10	10
11	20
12	30
13	40
14	50
15	100

3.5.4.10 *Clock-ephemeris covariance matrix parameters*. Clock-ephemeris covariance matrix parameters shall be as follows:

PRN mask number: see 3.5.4.1.

Scale exponent: A term to compute the scale factor used to code the Cholesky factorization elements.

Cholesky factorization elements ($E_{i,j}$): Elements of an upper triangle matrix which compresses the information in the clock and ephemeris covariance matrix. These elements are used to compute the user differential range estimate (UDRE) degradation factor (δUDRE) as a function of user position.

3.5.5 DEFINITIONS OF PROTOCOLS FOR L1 SBAS DATA APPLICATION

Note.— This section provides definitions of parameters used by the non-aircraft or aircraft elements that are not transmitted. These parameters, necessary to ensure interoperability of SBAS, are used to determine the navigation solution and its integrity (protection levels).

3.5.5.1 *GEO POSITION AND CLOCK*

3.5.5.1.1 *GEO position estimate*. The estimated position of a GEO at any time t_k is:

$$\begin{bmatrix}\hat{X}_G\\ \hat{Y}_G\\ \hat{Z}_G\end{bmatrix} = \begin{bmatrix}X_G\\ Y_G\\ Z_G\end{bmatrix} + \begin{bmatrix}\dot{X}_G\\ \dot{Y}_G\\ \dot{Z}_G\end{bmatrix}(t\text{-}t_{0,GEO}) + \frac{1}{2}\begin{bmatrix}\ddot{X}_G\\ \ddot{Y}_G\\ \ddot{Z}_G\end{bmatrix}(t\text{–}t_{0,GEO})^2$$

3.5.5.1.2 *GEO clock correction*. The clock correction for a SBAS GEO satellite *i* is applied in accordance with the following equation:

$$t = t_G - \Delta t_G$$

where

t = SBAS network time;
t_G = GEO code phase time at transmission of message; and
Δt_G = GEO code phase offset.

3.5.5.1.2.1 GEO code phase offset (Δt_G) at any time *t* is:

$$\Delta t_G = a_{Gf0} + a_{Gf1}\,(t - t_{0,GEO})$$

where $(t - t_{0,GEO})$ is corrected for end-of-day crossover.

3.5.5.2 *LONG-TERM CORRECTIONS*

3.5.5.2.1 *GPS clock correction*. The clock correction for a GPS satellite *i* is applied in accordance with the following equation:

$$t = t_{SV,i} - [(\Delta t_{SV,i})_{L1} + \delta\Delta t_{SV,i}]$$

where

t = SBAS network time;
$t_{SV,i}$ = the GPS satellite time at transmission of message;
$(\Delta t_{SV,i})_{L1}$ = the satellite PRN code phase offset as defined in 3.1.2.2; and
$\delta\Delta t_{SV,i}$ = the code phase offset correction.

3.5.5.2.1.1 The code phase offset correction ($\delta\Delta t_{SV,i}$) for a GPS or SBAS satellite *i* at any time of day t_k is:

$$\delta\Delta t_{SV,i} = \delta a_{i,f0} + \delta a_{i,f1}\,(t_k - t_{i,LT})$$

3.5.5.2.2 *GLONASS clock correction*. The clock correction for a GLONASS satellite i is applied in accordance with the following equation:

$$t = t_{SV,i} + \tau_n(t_b) - \gamma_n(t_b)(t_{SV,i} - t_b) - \delta\Delta t_{SV,i}$$

where

t	=	SBAS network
$t_{SV,i}$	=	the GLONASS satellite time at transmission of message
t_b, $\tau_n(t_b)$, $\gamma_n(t_b)$	=	the GLONASS time parameters as defined in 3.2.2.2
$\delta\Delta t_{SV,i}$	=	the code phase offset correction

The code phase offset correction $\delta\Delta t_{SV,i}$ for a GLONASS satellite *i* is:

$$\delta\Delta t_{SV,i} = \delta a_{i,f0} + \delta a_{i,f1}(t - t_{i,LT}) + \delta a_{i,GLONASS}$$

where $(t - t_{i,LT})$ is corrected for end-of-day crossover. If the velocity code = 0, then $\delta a_{i,f1} = 0$.

3.5.5.2.3 *Satellite position correction*. The SBAS-corrected vector for a core satellite constellation(s) or SBAS satellite *i* at time *t* is:

$$\begin{bmatrix} x_i \\ y_i \\ z_i \end{bmatrix}_{\text{corrected}} = \begin{bmatrix} x_i \\ y_i \\ z_i \end{bmatrix} + \begin{bmatrix} \delta x_i \\ \delta y_i \\ \delta z_i \end{bmatrix} + \begin{bmatrix} \delta \dot{x}_i \\ \delta \dot{y}_i \\ \delta \dot{z}_i \end{bmatrix} (t - t_{i,LT})$$

where

$(t - t_{i,LT})$ is corrected for end-of-day crossover; and
$[x_i\ y_i\ z_i]^T$ = the core satellite constellation(s) or SBAS satellite position vector as defined in 3.1.2.3, 3.2.2.3 and 3.5.5.1.1.

If the velocity code = 0, then $[\delta\dot{x}_i\ \delta\dot{y}_i\ \delta\dot{z}_i]^T = [0\ 0\ 0]^T$.

3.5.5.3 *Pseudo-range corrections*. The corrected pseudo-range at time *t* for satellite *i* is:

$$PR_{i,corrected} = PR_i + FC_i + RRC_i\,(t - t_{i,0f}) + IC_i + TC_i$$

where

PR_i	=	the measured pseudo-range after application of the satellite clock correction;
FC_i	=	the fast correction;
RRC_i	=	the range rate correction;
IC_i	=	the ionospheric correction;
TC_i	=	the tropospheric correction (negative value representing the troposphere delay); and
$t_{i,0f}$	=	the time of applicability of the most recent fast corrections, which is the start of the epoch of the SNT second that is coincident with the transmission at the SBAS satellite of the first symbol of the message block.

3.5.5.4 *Range rate corrections (RRC)*. The range rate correction for satellite *i* is:

$$RRC_i = \begin{cases} \dfrac{FC_{i,current} - FC_{i,previous}}{t_{i,0f} - t_{i,0f\_previous}}, if\ a_i \neq 0 \\ 0, if\ a_i = 0 \end{cases}$$

where

$FC_{i,current}$ = the most recent fast correction;
$FC_{i,previous}$ = a previous fast correction;
$t_{i,0f}$ = the time of applicability of $FC_{i,current}$;
$ti_{,0f\_previous}$ = the time of applicability of $FC_{i,previous}$; and
a_i = fast correction degradation factor (see Table B-72).

3.5.5.5 *BROADCAST IONOSPHERIC CORRECTIONS*

3.5.5.5.1 *Location of ionospheric pierce point (IPP)*. The location of an IPP is defined to be the intersection of the line segment from the receiver to the satellite and an ellipsoid with constant height of 350 km above the WGS-84 ellipsoid. This location is defined in WGS-84 latitude (ϕ_{pp}) and longitude (λ_{pp}).

3.5.5.5.2 *Ionospheric corrections*. The ionospheric correction for satellite *i* is:

$$IC_i = - F_{pp}\, \tau_{vpp}$$

where

F_{pp} = obliquity factor = $\left[1 - \left(\frac{R_e \cos\theta_i}{R_e + h_1}\right)^2\right]^{-\frac{1}{2}}$;
τ_{vpp} = interpolated vertical ionospheric delay estimate (3.5.5.5.3);
R_e = 6 378.1363 km;
θ_i = elevation angle of satellite *i*; and
h_I = 350 km.

Note.— For GLONASS satellites, the ionospheric correction (IC_i) is to be multiplied by the square of the ratio of the GLONASS to the GPS frequencies ($f_{GLONASS/fGPS}$)^2.

3.5.5.5.3 *Interpolated vertical ionospheric delay estimate*. When four points are used for interpolation, the interpolated vertical ionospheric delay estimate at latitude ϕ_{pp} and longitude λ_{pp} is:

$$\tau_{vpp} = \sum_{k=1}^{4} W_k\, \tau_{vk}$$

where

τ_{vk}: the broadcast grid point vertical delay values at the kth corner of the IGP grid, as shown in Figure B-26.

$W_1 = x_{pp}\, y_{pp}$;
$W_2 = (1 - x_{pp})\, y_{pp}$;
$W_3 = (1 - x_{pp})\, (1 - y_{pp})$; and
$W_4 = x_{pp}\, (1 - y_{pp})$.

3.5.5.5.3.1 For IPPs between N85° and S85°:

$$x_{pp} = \frac{\lambda_{pp} - \lambda_1}{\lambda_2 - \lambda_1}$$

$$y_{pp} = \frac{\phi_{pp} - \phi_1}{\phi_2 - \phi_1}$$

where

λ_1 = longitude of IGPs west of IPP;
λ_2 = longitude of IGPs east of IPP;
ϕ_1 = latitude of IGPs south of IPP; and
ϕ_2 = latitude of IGPs north of IPP.

Note.— If λ_1 and λ_2 cross 180 degrees of longitude, the calculation of x_{pp} must account for the discontinuity in longitude values.

3.5.5.5.3.2 For IPPs north of N85° or south of S85°:

$$y_{pp} = \frac{|\phi_{pp}| - 85°}{10°}$$

$$x_{pp} = \frac{\lambda_{pp} - \lambda_3}{90°} \times (1 - 2\,y_{pp}) + y_{pp}$$

where

λ_1 = longitude of the second IGP to the east of the IPP;
λ_2 = longitude of the second IGP to the west of the IPP;
λ_3 = longitude of the closest IGP to the west of the IPP; and
λ_4 = longitude of the closest IGP to the east of the IPP.

When three points are used for interpolation, the interpolated vertical ionospheric delay estimated is:

3.5.5.5.3.3 For points between S75° and N75°:

$$\tau_{vpp} = \sum_{k=1}^{3} W_k\,\tau_{vk}$$

where

$W_1 = y_{pp}$;
$W_2 = 1 - x_{pp} - y_{pp}$; and
$W_3 = x_{pp}$.

3.5.5.5.3.4 x_{pp} and y_{pp} are calculated as for four-point interpolation, except that λ_1 and ϕ_1 are always the longitude and latitude of IGP2, and λ_2 and ϕ_2 are the other longitude and latitude. IGP2 is always the vertex opposite the hypotenuse of the triangle defined by the three points, IGP1 has the same longitude as IGP2, and IGP3 has the same latitude as IGP2 (an example is shown in Figure B-27).

3.5.5.5.3.5 For points north of N75° and south of S75°, three-point interpolation is not supported.

3.5.5.5.4 *Selection of ionospheric grid points (IGPs)*. The protocol for the selection of IGPs is:

a) For an IPP between N60° and S60°:

1) if four IGPs that define a 5-degree-by-5-degree cell around the IPP are set to "1" in the IGP mask, they are selected; else,

2) if any three IGPs that define a 5-degree-by-5-degree triangle that circumscribes the IPP are set to "1" in the IGP mask, they are selected; else,

3) if any four IGPs that define a 10-degree-by-10-degree cell around the IPP are set to "1" in the IGP mask, they are selected; else,

4) if any three IGPs that define a 10-degree-by-10-degree triangle that circumscribes the IPP are set to "1" in the IGP mask, they are selected; else,

5) an ionospheric correction is not available.

b) For an IPP between N60° and N75° or between S60° and S75°:

1) if four IGPs that define a 5-degree-latitude-by-10-degree longitude cell around the IPP are set to "1" in the IGP mask, they are selected; else,

2) if any three IGPs that define a 5-degree-latitude-by-10-degree longitude triangle that circumscribes the IPP are set to "1" in the IGP mask, they are selected; else,

3) if any four IGPs that define a 10-degree-by-10-degree cell around the IPP are set to "1" in the IGP mask, they are selected; else,

4) if any three IGPs that define a 10-degree-by-10-degree triangle that circumscribes the IPP are set to "1" in the IGP mask, they are selected; else,

5) an ionospheric correction is not available.

c) For an IPP between N75° and N85° or between S75° and S85°:

1) if the two nearest IGPs at 75° and the two nearest IGPs at 85° (separated by 30° longitude if Band 9 or 10 is used, separated by 90° otherwise) are set to "1" in the IGP mask, a 10-degree-by-10-degree cell is created by linearly interpolating between the IGPs at 85° to obtain virtual IGPs at longitudes equal to the longitudes of the IGPs at 75°; else,

2) an ionospheric correction is not available.

d) For an IPP north of N85°:

1) if the four IGPs at N85° latitude and longitudes of W180°, W90°, 0° and E90° are set to "1" in the IGP mask, they are selected; else,

2) an ionospheric correction is not available.

e) For an IPP south of S85°:

1) if the four IGPs at S85° latitude and longitudes of W140°, W50°, E40° and E130° are set to "1" in the IGP mask, they are selected; else,

2) an ionospheric correction is not available.

Note.— This selection is based only on the information provided in the mask, without regard to whether the selected IGPs are monitored, "Not Monitored", or "Do Not Use". If any of the selected IGPs is identified as "Do Not Use", an ionospheric correction is not available. If four IGPs are selected, and one of the four is identified as "Not Monitored", then three-point interpolation is used if the IPP is within the triangular region covered by the three corrections that are provided.

3.5.5.6 *Protection levels*. The horizontal protection level (HPL) and the vertical protection level (VPL) are:

$$HPL_{SBAS} = \begin{cases} K_{H,NPA} \times d_{major} & \text{for en-route through non-precision approach (NPA) modes} \\ K_{H,PA} \times d_{major} & \text{for precision approach (PA) and approach with vertical guidance (APV) modes} \end{cases}$$

$$VPL_{SBAS} = K_{V,PA} \times d_V$$

where

$d_V^2 = \sum_{i=1}^{N} s_{v,i}^2 \sigma_i^2$ = variance of model distribution that overbounds the true error distribution in the vertical axis;

$$d_{major} = \sqrt{\frac{d_x^2 + d_y^2}{2} + \sqrt{\left(\frac{d_x^2 - d_y^2}{2}\right)^2 + d_{xy}^2}}$$

where

$d_x^2 = \sum_{i=1}^{N} s_{x,i}^2 \sigma_i^2$ = variance of model distribution that overbounds the true error distribution in the x axis;

$d_y^2 = \sum_{i=1}^{N} s_{y,i}^2 \sigma_i^2$ = variance of model distribution that overbounds the true error distribution in the y axis;

$d_{xy} = \sum_{i=1}^{N} s_{x,i} s_{y,i} \sigma_i^2$ = covariance of model distribution in the x and y axis;

where

$s_{x,i}$ = the partial derivative of position error in the x-direction with respect to pseudo-range error on the ith satellite;

$s_{y,i}$ = the partial derivative of position error in the y-direction with respect to pseudo-range error on the ith satellite;

$s_{V,i}$ = the partial derivative of position error in the vertical direction with respect to pseudo-range error on the ith satellite; and

$\sigma_i^2 = \sigma_{i,flt}^2 + \sigma_{i,UIRE}^2 + \sigma_{i,air}^2 + \sigma_{i,tropo}^2$

The variances ($\sigma_{i,flt}^2$ and $\sigma_{i,UIRE}^2$) are defined in 3.5.5.6.2 and 3.5.5.6.3.1. The parameters ($\sigma_{i,air}^2$ and $\sigma_{i,tropo}^2$) are determined by the aircraft element (3.5.8.4.2 and 3.5.8.4.3).

The x and y axes are defined to be in the local horizontal plane, and the v axis represents local vertical.

For a general least-squares position solution, the projection matrix S is:

$$S \equiv \begin{bmatrix} S_{x,1} & S_{x,2} & \cdots & S_{x,N} \\ S_{y,1} & S_{y,2} & \cdots & S_{y,N} \\ S_{v,1} & S_{v,2} & \cdots & S_{v,N} \\ S_{t,1} & S_{t,2} & \cdots & S_{t,N} \end{bmatrix} = (G^T \times W \times G)^{-1} \times G^T \times W$$

where

G_i = $[-\cos El_i \cos Az_i \; -\cos El_i \sin Az_i \; -\sin El_i \; 1]$ = i^{th} row of G;

$$W^{-1} = \begin{bmatrix} w_1 & 0 & \cdots & 0 \\ 0 & w_2 & \cdots & 0 \\ \vdots & \vdots & \ddots & \vdots \\ 0 & & \cdots & w_i \end{bmatrix};$$

El_i = the elevation angle of the ith ranging source (in degrees);
Az_i = the azimuth of the ith ranging source taken counter-clockwise from the x axis in degrees; and
w_i = the inverse weight associated with satellite $i = \sigma^2_i$.

Note 1.— To improve readability, the subscript i was omitted from the protection matrix's equation.

Note 2.— For an unweighted least-squares solution, the weighting matrix is an identity matrix ($w_i = 1$).

3.5.5.6.1 *Definition of K values*. The K values are:

$$K_{H,NPA} = 6.18;$$

$$K_{H,PA} = 6.0; \text{ and}$$

$$K_{V,PA} = 5.33.$$

3.5.5.6.2 *Definition of fast and long-term correction error model*. If fast corrections and long-term correction/GEO ranging parameters are applied, and degradation parameters are applied:

$$\sigma^2_{i,flt} = \begin{cases} \left[(\sigma_{i,UDRE})(\delta_{UDRE}) + \varepsilon_{fc} + \varepsilon_{rrc} + \varepsilon_{ltc} + \varepsilon_{er}\right]^2, & \text{if } RSS_{UDRE} = 0 \text{ (message Type 10)} \\ \left[(\sigma_{i,UDRE})(\delta_{UDRE})\right]^2 + \varepsilon^2_{fc} + \varepsilon^2_{rrc} + \varepsilon^2_{ltc} + \varepsilon^2_{er}, & \text{if } RSS_{UDRE} = 1 \text{ (message Type10)} \end{cases}$$

where

if using message Type 27, δ_{UDRE} is a region-specific term as defined in 3.5.4.9,
if using message Type 28, δ_{UDRE} is a satellite-specific term as defined in 3.5.5.6.2.5,
if using neither message, $\delta_{UDRE} = 1$ (see Attachment D, 6.5.7).

Note.— With the requirement to broadcast either a Type 27 message or a Type 28 message in section 3.5.7.4.7, user equipment no longer needs to set $\delta_{UDRE} = 1$ and can instead wait for broadcast data.

If fast corrections and long-term corrections/GEO ranging parameters are applied, but degradation parameters are not applied:

$$\sigma^2_{i,flt} = [(\sigma_{i,UDRE})\,(\delta_{UDRE}) + 8m]^2$$

3.5.5.6.2.1 *Fast correction degradation*. The degradation parameter for fast correction data is:

$$\varepsilon_{fc} = \frac{a(t - t_u + t_{lat})^2}{2}$$

where

t = the current time;
t_u = (UDREI$_i$ reference time): if IODF$_j$ ≠3, the start time of the SNT 1-second epoch that is coincident with the start of the transmission of the message block that contains the most recent UDREI$_i$ data (Type 2 to 6, or Type 24 messages) that matches the IODF$_j$ of the fast correction being used. If IODF$_j$ = 3, the start time of the epoch of the SNT 1-second epoch that is coincident with the start of transmission of the message that contains the fast correction for the ith satellite; and

t_{lat} = (as defined in 3.5.4.7).

Note.— For UDREs broadcast in Type 2 to 5, and Type 24 messages, t_u equals the time of applicability of the fast corrections since they are in the same message. For UDREs broadcast in Type 6 message and if the IODF = 3, t_u also equals the time of applicability of the fast corrections (t_{0f}). For UDREs broadcast in Type 6 message and IODF ≠ 3, t_u is defined to be the time of transmission of the first bit of Type 6 message at the GEO.

3.5.5.6.2.2 *Range rate correction degradation*

3.5.5.6.2.2.1 If the RRC = 0, then $\varepsilon_{rrc} = 0$.

3.5.5.6.2.2.2 If the RRC ≠ 0 and IODF ≠ 3, the degradation parameter for fast correction data is:

$$\varepsilon_{rrc} = \begin{cases} 0, & \text{if } (IODF_{current} - IODF_{previous}) MOD 3 = 1 \\ \left(\frac{a I_{fc}}{4} + \frac{B_{rrc}}{\Delta t}\right)(t - t_{0f}), & \text{if } (IODF_{current} - IODF_{previous}) MOD 3 \neq 1 \end{cases}$$

3.5.5.6.2.2.3 If RRC ≠ 0 and IODF = 3, the degradation parameter for range rate data is:

$$\varepsilon_{rrc} = \begin{cases} 0, & \text{if } \left|\Delta t - \frac{I_{fc}}{2}\right| = 0 \\ \left(\frac{a\left|\Delta t - \frac{I_{fc}}{2}\right|}{2} + \frac{B_{rrc}}{\Delta t}\right)(t - t_{0f}), & \text{if } \left|\Delta t - \frac{I_{fc}}{2}\right| \neq 0 \end{cases}$$

where

t = the current time;
$IODF_{current}$ = IODF associated with most recent fast correction;
$IODF_{previous}$ = IODF associated with previous fast correction;
Δt = $t_{i,0f} - t_{i,0f\_previous}$; and
I_{fc} = the user time-out interval for fast corrections.

3.5.5.6.2.3 *Long-term correction degradation*

3.5.5.6.2.3.1 *Core satellite constellation(s)*

3.5.5.6.2.3.1.1 For velocity code = 1, the degradation parameter for long-term corrections of satellite i is:

$$\varepsilon_{ltc} = \begin{cases} 0, & \text{if } t_{i,LT} < t < t_{i,LT} + I_{ltc\_v1} \\ C_{ltc\_lsb} + C_{ltc\_v1} \max\left(0, t_{i,LT} - t, t - t_{i,LT} - I_{ltc\_v1}\right), & \text{otherwise} \end{cases}$$

3.5.5.6.2.3.1.2 For velocity code = 0, the degradation parameter for long-term corrections is:

$$\varepsilon_{ltc}=C_{ltc\_v0}\left[\frac{t-t_{ltc}}{I_{lt\text{-}v0}}\right]$$

where

t = the current time;
t_{ltc} = the time of transmission of the first bit of the long-term correction message at the GEO; and
[x] = the greatest integer less than x.

3.5.5.6.2.3.2 *GEO satellites*. The degradation parameter for long-term corrections is:

$$\varepsilon_{ltc}=\begin{cases}0, & \text{if } t_{0,GEO}<t<t_{0,GEO}+I_{GEO}\\ C_{geo\_lsb}+C_{geo\_v}\max\left(0,t_{0,GEO}-t,t-t_{0,GEO}-I_{geo}\right), & \text{otherwise}\end{cases}$$

where t = the current time.

Note.— When long-term corrections are applied to a GEO satellite, the long-term correction degradation is applied and the GEO navigation message degradation is not applied.

3.5.5.6.2.4 *Degradation for en-route through non-precision approach*

$$\varepsilon_{er}=\begin{cases}0, & \text{if neither fast nor long-term corrections have timed out for precision approach/approach with vertical guidance}\\ C_{er}, & \text{if fast or long-term corrections have timed out for precision approach/approach with vertical guidance}\end{cases}$$

3.5.5.6.2.5 *UDRE degradation factor calculated with message Type 28 data*. The δUDRE is:

$$\delta_{UDRE}=\sqrt{I^{T}\cdot C\cdot I}+\varepsilon_{c}$$

where

$$I = \begin{bmatrix}i_x\\ i_y\\ i_z\\ 1\end{bmatrix},$$

$\begin{bmatrix}i_x\\ i_y\\ i_z\end{bmatrix}$ = the unit vector from the user to the satellite in the WGS-84 ECEF coordinate frame

$C = R^{T}\cdot R$

$\varepsilon_C = C_{covariance}\cdot SF$

$SF = 2^{\text{scale exponent}-5}$

$R = E\cdot SF$

$$E = \begin{bmatrix} E_{1,1} & E_{1,2} & E_{1,3} & E_{1,4} \\ 0 & E_{2,2} & E_{2,3} & E_{2,4} \\ 0 & 0 & E_{3,3} & E_{3,4} \\ 0 & 0 & 0 & E_{4,4} \end{bmatrix}$$

3.5.5.6.3 *Definition of ionospheric correction error model*

3.5.5.6.3.1 *Broadcast ionospheric corrections*. If SBAS-based ionospheric corrections are applied, σ^2_{UIRE} is:

$$\sigma^2_{UIRE} = F^2_{pp} \times \sigma^2_{UIVE}$$

where

F_{pp} = (as defined in 3.5.5.5.2);

$$\sigma^2_{UIVE} = \sum_{n=1}^{4} W_n \cdot \sigma^2_{n,ionogrid} \text{ or } \sigma^2_{UIVE} = \sum_{n=1}^{3} W_n \cdot \sigma^2_{n,ionogrid}$$

using the same ionospheric pierce point weights (W_n) and grid points selected for the ionospheric correction (3.5.5.5).

If degradation parameters are used, for each grid point:

$$\sigma^2_{n,ionogrid} = \begin{cases} \left(\sigma_{n,GIVE} + \varepsilon_{iono}\right)^2, & \text{if } RSS_{iono} = 0 \text{ (Type 10 message)} \\ \sigma^2_{n,GIVE} + \varepsilon^2_{iono}, & \text{if } RSS_{iono} = 1 \text{ (Type 10 message)} \end{cases}$$

where

ε_{iono} = $C_{iono\_step}\left[\frac{t - t_{iono}}{I_{iono}}\right] + C_{iono\_ramp}(t - t_{iono})$;
t = the current time;
t_{iono} = the time of transmission of the first bit of the ionospheric correction message at the GEO; and
$[x]$ = the greatest integer less than x.

If degradation parameters are not used, for each grid point:

$$\sigma_{n,ionogrid} = \sigma_{n,GIVE}$$

Note.— For GLONASS satellites, both σ_{GIVE} and ε_{iono} parameters are to be multiplied by the square of the ratio of the GLONASS to the GPS frequencies $(f_{GLONASS}/f_{GPS})^2$.

3.5.5.6.3.2 Ionospheric corrections. If SBAS-based ionospheric corrections are not applied, σ2UIRE is:

$$\sigma^2_{UIRE} = MAX\left\{\left(\frac{T_{iono}}{5}\right)^2, \left(F_{pp} \cdot \tau_{vert}\right)^2\right\}$$

where

T_{iono} = the ionospheric delay estimated by the chosen model (GPS correction or other model);
F_{pp} = (as defined in 3.5.5.5.2);

$$\tau_{vert} = \begin{cases} 9\text{ m}, & 0 \le \left|\phi_{pp}\right| \le 20 \\ 4.5\text{ m}, & 20 < \left|\phi_{pp}\right| \le 55; \text{ and} \\ 6\text{ m}, & 55 < \left|\phi_{pp}\right| \end{cases}$$

ϕ_{pp} = latitude of the ionospheric pierce point.

3.5.6 L1 SBAS MESSAGE TABLES

Each SBAS message shall be coded in accordance with the corresponding message format defined in Tables B-75 through B-91. All signed parameters in these tables shall be represented in two's complement, with the sign bit occupying the MSB.

Note.— The range for the signed parameters is smaller than indicated, as the maximum positive value is constrained to be one value less (the indicated value minus the resolution).

Table B-75. Type 0 "Do Not Use" message broadcast on L1

Data content	*Bits used*	*Range of values*	*Resolution*
Reserved	212	—	—

Table B-76. Type 1 PRN mask message

Data content	*Bits used*	*Range of values*	*Resolution*
For each of 210 PRN code numbers			
Mask value	1	0 or 1	1
IODP	2	0 to 3	1

Note.— All parameters are defined in 3.5.4.1.

Table B-77. Types 2 to 5 fast correction message

Data content	*Bits used*	*Range of values*	*Resolution*
$IODF_j$	2	0 to 3	1
IODP	2	0 to 3	1
For 13 slots			
Fast correction (FC_i)	12	±256.000 m	0.125 m
For 13 slots			
$UDREI_i$	4	(see Table B-67)	(see Table B-67)

Notes.—
1. The parameters $IODF_j$ and FC_i are defined in 3.5.4.4.2.
2. The parameter IODP is defined in 3.5.4.1.
3. The parameter $UDREI_i$ is defined in 3.5.4.5.

Table B-78. Type 6 integrity message

Data content	*Bits used*	*Range of values*	*Resolution*
$IODF_2$	2	0 to 3	1
$IODF_3$	2	0 to 3	1
$IODF_4$	2	0 to 3	1
$IODF_5$	2	0 to 3	1
For 51 satellites (ordered by PRN mask number)			
$UDREI_i$	4	(see Table B-67)	(see Table B-67)

Notes.—
1. The parameters $IODF_j$ are defined in 3.5.4.4.2.
2. The parameter $UDREI_i$ is defined in 3.5.4.5.

Table B-79. Type 7 fast correction degradation factor message

Data content	*Bits used*	*Range of values*	*Resolution*
System latency (t_{lat})	4	0 to 15 s	1 s
IODP	2	0 to 3	1 s
Spare	2	—	—
For 51 satellites (ordered by PRN mask number)			
Degradation factor indicator (ai_i)	4	(see Table B-72)	(see Table B-72)

Notes.—
1. The parameters t_{lat} and ai_i are defined in 3.5.4.7.
2. The parameter IODP is defined in 3.5.4.1.

Table B-80. Type 9 ranging function message

Data content	*Bits used*	*Range of values*	*Resolution*
Reserved	8	—	—
$t_{0,GEO}$	13	0 to 86 384 s	16 s
URA	4	(see Table B-64)	(see Table B-64)
X_G	30	±42 949 673 m	0.08 m
Y_G	30	±42 949 673 m	0.08 m
Z_G	25	±6 710 886.4 m	0.4 m
$\dot{X}_G$	17	±40.96 m/s	0.000625 m/s
$\dot{Y}_G$	17	±40.96 m/s	0.000625 m/s
$\dot{Z}_G$	18	±524.288 m/s	0.004 m/s
$\ddot{X}_G$	10	±0.0064 m/s^2	0.0000125 m/s^2
$\ddot{Y}_G$	10	±0.0064 m/s^2	0.0000125 m/s^2
$\ddot{Z}_G$	10	±0.032 m/s^2	0.0000625 m/s^2
a_{Gf0}	12	$\pm 0.9537 \times 10^{-6}$ s	2^{-31} s
a_{Gf1}	8	$\pm 1.1642 \times 10^{-10}$ s/s	2^{-40} s/s

Note.— All parameters are defined in 3.5.4.2.

Table B-81. Type 10 degradation parameter message

Data content	*Bits used*	*Range of values*	*Resolution*
B_{rrc}	10	0 to 2.046 m	0.002 m
C_{ltc_lsb}	10	0 to 2.046 m	0.002 m
C_{ltc_v1}	10	0 to 0.05115 m/s	0.00005 m/s
I_{ltc_v1}	9	0 to 511 s	1 s
C_{ltc_v0}	10	0 to 2.046 m	0.002 m
I_{ltc_v0}	9	0 to 511 s	1 s
C_{geo_lsb}	10	0 to 0.5115 m	0.0005 m
C_{geo_v}	10	0 to 0.05115 m/s	0.00005 m/s
I_{geo}	9	0 to 511 s	1 s
C_{er}	6	0 to 31.5 m	0.5 m
C_{iono_step}	10	0 to 1.023 m	0.001 m
I_{iono}	9	0 to 511 s	1 s
$C_{iono\ ramp}$	10	0 to 0.005115 m/s	0.000005 m/s
RSS_{UDRE}	1	0 or 1	1
RSS_{iono}	1	0 or 1	1
$C_{covariance}$	7	0 to 12.7	0.1
Spare	81	—	—

Notes.—

1. All parameters are defined in 3.5.4.7.

2. The valid range for I_{ltc_vo} and I_{iono} is 1 to 511. The value of 0 is not valid and receivers will use a value of 1 in place of a transmitted value of 0.

Table B-82. Type 12 SBAS network time/UTC message

Data content	*Bits used*	*Range of values*	*Resolution*
A_{1SNT}	24	$\pm 7.45 \times 10^{-9}$ s/s	2^{-50} s/s
A_{0SNT}	32	±1 s	2^{-30} s
t_{0t}	8	0 to 602 112 s	4 096 s
WN_t	8	0 to 255 weeks	1 week
Δt_{LS}	8	±128 s	1 s
WN_{LSF}	8	0 to 255 weeks	1 week
DN	8	1 to 7 days	1 day
Δt_{LSF}	8	±128 s	1 s
UTC standard identifier	3	(see Table B-73)	(see Table B-73)
GPS time-of-week (TOW)	20	0 to 604 799 s	1 s
GPS week number (WN)	10	0 to 1 023 weeks	1 week
GLONASS indicator	1	0 or 1	1
$\delta a_{i,\ GLONASS}$ (*Note 2*)	24	$\pm 2^{-8}$ s	2^{-31} s
Spare	50	—	—

Notes.—
1. All parameters are defined in 3.5.4.8.
2. Applies only if SBAS sends GLONASS timing information in message Type 12 (see 3.5.7.4.4, Timing data).

Table B-83. Type 17 GEO almanac message

Data content	*Bits used*	*Range of values*	*Resolution*
For each of 3 satellites			
Reserved	2	0	—
PRN code number	8	0 to 210	1
Health and status	8	—	—
$X_{G,A}$	15	±42 598 400 m	2 600 m
$Y_{G,A}$	15	±42 598 400 m	2 600 m
$Z_{G,A}$	9	±6 656 000 m	26 000 m
$\dot{X}_{G,A}$	3	±40 m/s	10 m/s
$\dot{Y}_{G,A}$	3	±40 m/s	10 m/s
$\dot{Z}_{G,A}$	4	±480 m/s	60 m/s
$t_{almanac}$ (applies to all three satellites)	11	0 to 86 336 s	64 s

Note.— All parameters are defined in 3.5.4.3.

Table B-84. Type 18 IGP mask message

Data content	*Bits used*	*Range of values*	*Resolution*
Number of IGP bands	4	0 to 11	1
IGP band identifier	4	0 to 10	1
Issue of data — ionosphere ($IODI_k$)	2	0 to 3	1
For 201 IGPs			
IGP mask value	1	0 or 1	1
Spare	1	—	—

Note.— All parameters are defined in 3.5.4.6.

Table B-85. Type 24 mixed fast/long-term satellite error correction message

Data content	*Bits used*	*Range of values*	*Resolution*
For 6 slots			
Fast correction (FC_i)	12	±256.000 m	0.125 m
For 6 slots			
$UDREI_i$	4	(see Table B-69)	(see Table B-69)
IODP	2	0 to 3	1
Fast correction type identifier	2	0 to 3	1
$IODF_j$	2	0 to 3	1
Spare	4	—	—
Type 25 half-message	106	—	—

Notes.—

1. *The parameters fast correction type identifier, IODFj, and FCi are defined in 3.5.4.4.2.*
2. *The parameter IODP is defined in 3.5.4.1.*
3. *The parameter UDREIi is defined in 3.5.4.5.*
4. *The long-term satellite error correction message is divided into two half-messages. The half message for a velocity code = 0 is defined in Table B-86. The half message for a velocity code = 1 is defined in Table B-87.*

Table B-86. Type 25 long-term satellite error correction half message (VELOCITY CODE = 0)

Data content	*Bits used*	*Range of values*	*Resolution*
Velocity Code = 0	1	0	1
For 2 Satellites			
PRN mask number	6	0 to 51	1
Issue of data (IOD_i)	8	0 to 255	1
δx_i	9	±32 m	0.125 m
δy_i	9	±32 m	0.125 m
δz_i	9	±32 m	0.125 m
$\delta a_{i,f0}$	10	$\pm 2^{-22}$ s	2^{-31} s
IODP	2	0 to 3	1
Spare	1	—	—

Notes.—
1. The parameters PRN mask number and IODP are defined in 3.5.4.1.
2. All other parameters are defined in 3.5.4.4.1.

Table B-87. Type 25 long-term satellite error correction half message (VELOCITY CODE = 1)

Data content	*Bits used*	*Range of values*	*Resolution*
For 1 Satellite			
Velocity Code = 1	1	1	1
PRN mask number	6	0 to 51	1
Issue of data (IOD_i)	8	0 to 255	1
δx_i	11	±128 m	0.125 m
δy_i	11	±128 m	0.125 m
δz_i	11	±128 m	0.125 m
$\delta a_{i,f0}$	11	$\pm 2^{-21}$ s	2^{-31} s
$\delta \dot{x}_i$	8	±0.0625 m/s	2^{-11} m/s
$\delta \dot{y}_i$	8	±0.0625 m/s	2^{-11} m/s
$\delta \dot{z}_i$	8	±0.0625 m/s	2^{-11} m/s
$\delta a_{i,f1}$	8	$\pm 2^{-32}$ s/s	2^{-39} s/s
Time-of-applicability ($t_{i,LT}$)	13	0 to 86 384 s	16 s
IODP	2	0 to 3	1

Notes.—
1. The parameters PRN mask number and IODP are defined in 3.5.4.1.
2. All other parameters are defined in 3.5.4.4.1.

Table B-88. Type 26 ionospheric delay message

Data content	*Bits used*	*Range of values*	*Resolution*
IGP band identifier	4	0 to 10	1
IGP block identifier	4	0 to 13	1
For each of 15 grid points			
IGP vertical delay estimate	9	0 to 63.875 m	0.125 m
Grid ionospheric vertical error indicator ($GIVEI_i$)	4	(see Table B-71)	(see Table B-71)
$IODI_k$	2	0 to 3	1
Spare	7	—	—

Note.— All parameters are defined in 3.5.4.6.

Table B-89. Type 27 SBAS service message

Data content	*Bits used*	*Range of values*	*Resolution*
Issue of data, service (IODS)	3	0 to 7	1
Number of service messages	3	1 to 8	1
Service message number	3	1 to 8	1
Number of regions	3	0 to 5	1
Priority code	2	0 to 3	1
δUDRE indicator-inside	4	0 to 15	1
δUDRE indicator-outside	4	0 to 15	1
For each of 5 regions			
Coordinate 1 latitude	8	±90°	1°
Coordinate 1 longitude	9	±180°	1°
Coordinate 2 latitude	8	±90°	1°
Coordinate 2 longitude	9	±180°	1°
Region shape	1	—	—
Spare	15	—	—

Note.— All parameters are defined in 3.5.4.9.

Table B-90. Type 63 null message

Data content	*Bits used*	*Range of values*	*Resolution*
Reserved	212	—	—

Table B-91. Type 28 clock-ephemeris covariance matrix

Data content	*Bits used*	*Range of values*	*Resolution*
IODP	2	0 to 3	1
For two satellites			
PRN mask number	6	0 to 51	1
Scale exponent	3	0 to 7	1
$E_{1,1}$	9	0 to 511	1
$E_{2,2}$	9	0 to 511	1
$E_{3,3}$	9	0 to 511	1
$E_{4,4}$	9	0 to 511	1
$E_{1,2}$	10	±512	1
$E_{1,3}$	10	±512	1
$E_{1,4}$	10	±512	1
$E_{2,3}$	10	±512	1
$E_{2,4}$	10	±512	1
$E_{3,4}$	10	±512	1

Notes.—
1. The parameters PRN mask number and IODP are defined in 3.5.4.1.
2. All other parameters are defined in 3.5.4.10.

3.5.7 L1 SBAS NON-AIRCRAFT ELEMENTS

Note 1.— Depending on the level of service offered by a particular SBAS, different functions can be implemented as described in Chapter 3, 3.7.3.4.2.

Note 2.— The parameters that are referred to in this section are defined in 3.5.4.

3.5.7.1 *GENERAL*

3.5.7.1.1 *Required data and broadcast intervals*. SBAS shall broadcast the data required for the supported functions as shown in Table B-92. If the SBAS broadcasts data that are not required for a particular function, the requirements for that data supporting other functions shall apply. The maximum interval between broadcasts for all data of each data type provided shall be as defined in Table B-92.

3.5.7.1.2 *SBAS radio frequency monitoring*. The SBAS shall monitor the SBAS satellite parameters shown in Table B-93 and take the indicated action.

Note.— SBAS may broadcast null messages (Type 63 messages) in each time slot for which no other data are broadcast.

3.5.7.1.3 *"Do Not Use"*. SBAS shall broadcast a "Do Not Use" message (Type 0 message) when necessary to inform users not to use the SBAS satellite ranging function and its broadcast data.

3.5.7.1.4 The Doppler shift in the GEO satellite signal seen at any fixed location within the GEO footprint for any GEO shall not exceed ±450 Hz.

Note.— This maximum Doppler shift corresponds approximately to the maximum GEO satellite orbit inclination that can be supported by the coding ranges for Type 9 and Type 17 messages.

3.5.7.1.5 *Geostationary orbit (GEO) ranging function parameters*. Each SBAS satellite shall broadcast geostationary orbit (GEO) ranging function parameters (defined in 3.5.4.2).

Note.— It is necessary to broadcast geostationary orbit ranging function parameters even when a ranging function is not provided, so that airborne receivers may implement a positive identification of the broadcasting SBAS satellite. When ranging is not provided, the accuracy of the Type 17 data (and Type 9 data) only needs to support the acquisition of the satellite.

3.5.7.1.5.1 The error in the Doppler shift of a GEO satellite derived from any Type 9 message that has not timed out, with respect to the true GEO Doppler shift seen at any fixed location within the GEO footprint, shall not exceed ±210 Hz.

3.5.7.1.6 *Almanac data*. Each SBAS satellite shall broadcast almanac data (defined in 3.5.4.3) for all SBAS satellites of the same service provider.

3.5.7.1.6.1 The error in the estimated position of the satellite derived from any Type 17 message broadcast within the previous 15 minutes, with respect to the true satellite position, shall not exceed 3 000 km.

3.5.7.1.6.2 The separation distance between the estimated position of the satellite derived from any Type 17 message broadcast within the previous 15 minutes and the position of the satellite derived from the GEO ranging parameters in any Type 9 message that has not timed out shall not exceed 200 km.

3.5.7.1.6.3 The error in the Doppler shift of a GEO satellite derived from any Type 17 message broadcast within the previous 15 minutes, with respect to the true GEO Doppler shift seen at any fixed location within the GEO footprint, shall not exceed ±210 Hz.

3.5.7.1.6.4 SBAS shall not broadcast almanac data for any SBAS satellite from a different service provider for which the position estimated from the almanac data broadcast within the previous 15 minutes would be within 200 km of the position of any of its own GEOs as derived from the GEO ranging parameters from any Type 9 message that has not timed out.

3.5.7.1.6.5 Where the estimated position of a GEO satellite providing a ranging function, derived from the Type 17 message broadcast within the previous 15 minutes, is within 200 km of the position of another GEO satellite of the same service provider, derived from a Type 9 message for this GEO that has not timed out, the GEO UDRE value shall be set sufficiently large to account for the possibility that a user could misidentify the PRN of the GEO providing the ranging function.

3.5.7.1.6.6 The health and status parameter shall indicate the satellite status and the service provider identifier, as defined in 3.5.4.3.

3.5.7.1.6.7 Unused almanac slots in Type 17 messages shall be coded with a PRN code number of "0".

3.5.7.1.6.8 The service provider shall ensure the correctness of the service provider ID broadcast in any almanac.

3.5.7.2 *Ranging function*. If an SBAS provides an L1 SBAS ranging function, it shall comply with the requirements contained in this section in addition to the requirements of 3.5.7.1.

3.5.7.2.1 *Performance requirements*

Note.— See Chapter 3, 3.7.3.4.3.

3.5.7.2.2 *Ranging function data*. SBAS shall broadcast ranging function data such that the SBAS satellite position error projected on the line-of-sight to any user in the satellite footprint is less than 256 metres. Each SBAS satellite shall broadcast a URA representing an estimate of the standard deviation of the ranging errors referenced to SNT for L1 SBAS.

3.5.7.3 *GNSS satellite status function*. If an SBAS provides a satellite status function, it shall also comply with the requirements contained in this section.

Note.— An SBAS may be able to provide integrity on some GPS satellites that are designated either marginal or unhealthy.

3.5.7.3.1 *Performance of satellite status functions*. Given any valid combination of active data, the probability of a horizontal error exceeding the HPL_{SBAS} (as defined in 3.5.5.6) for longer than 8 consecutive seconds shall be less than 10^{-7} in any hour, assuming a user with zero latency.

Note.— Active data is defined to be data that have not timed out per 3.5.8.1.2. This requirement includes core satellite constellation(s) and SBAS failures.

3.5.7.3.2 *PRN mask and Issue of data – PRN (IODP)*. SBAS shall broadcast a PRN mask and IODP (Type 1 message). The PRN mask values shall indicate whether or not data are being provided for each GNSS satellite. The IODP shall change when there is a change in the PRN mask. The change of IODP in Type 1 messages shall occur before the IODP changes in any other message. The IODP in Type 2 to 5, 7, 24, 25 and 28 messages shall equal the IODP broadcast in the PRN mask message (Type 1 message) used to designate the satellites for which data are provided in that message.

Table B-92. Data broadcast intervals and supported functions

Data type	*Maximum broadcast interval*	*Ranging*	*GNSS Satellite status*	*Basic differential correction*	*Precise differential correction*	*Associated Message types*
Clock-Ephemeris covariance matrix	120 s		R (see *Note 5*)	R (see *Note 5*)	R (see *Note 5*)	28
SBAS in test mode	6 s					0
PRN mask	120 s		R	R	R	1
UDREI	6 s		R*	R	R	2 to 6, 24
Fast corrections	$I_{fc}/2$ (see Note 4)		R*	R	R	2 to 5, 24
Long-term corrections	120 s		R*	R	R	24, 25
GEO ranging function data	120 s	R	R	R	R	9
Fast correction degradation	120 s		R*	R	R	7
Degradation parameters	120 s				R	10
Ionospheric grid mask	300 s				R	18
Ionospheric corrections, GIVEI	300 s				R	26

Data type	*Maximum broadcast interval*	*Ranging*	*GNSS Satellite status*	*Basic differential correction*	*Precise differential correction*	*Associated Message types*
Timing data	300 s	R (see *Note 3*)	R (see *Note 3*)	R (see *Note 3*)	R (see *Note 3*)	12
Almanac data	300 s	R	R	R	R	17
Service level	300 s		R (see *Note 5*)	R (see *Note 5*)	R (see *Note 5*)	27

Notes.—
1. "R" indicates that the data must be broadcast to support the function.
2. "R" indicates special coding as described in 3.5.7.3.3.*
3. Type 12 messages are only required if data are provided for GLONASS satellites.
4. I_{fc} refers to the PA/APV time-out interval for fast corrections, as defined in Table B-95.
5. Either a Type 27 message or Type 28 message is to be broadcast as required in 3.5.7.6.2

Table B-93. SBAS L1 radio frequency monitoring

Parameter	*Reference*	*Alarm limit*	*Required action*
Signal power level	Chapter 3, 3.7.3.4.5.3	minimum specified power maximum specified power (*Note 2*)	Cease ranging function (Note 1). Cease broadcast.
Modulation	Chapter 3, 3.7.3.4.5.5	monitor for waveform distortion	Cease L1 ranging function (Note 1).
SNT-to-GPS time	Chapter 3, 3.7.3.4.7	N/A (*Note 3*)	Cease L1 ranging function unless σ_{UDRE} reflects error.
Carrier frequency stability	3.5.2.1	N/A (*Note 3*)	Cease L1 ranging function unless σ_{UDRE} reflects error.
Code/frequency coherence	3.5.2.4	N/A (*Note 3*)	Cease L1 ranging function unless σ_{UDRE} reflects error.
Maximum code phase deviation	3.5.2.6	N/A (*Notes 2 and 3*)	Cease L1 ranging function unless σ_{UDRE} reflects error.
Convolutional encoding	3.5.2.9	all transmit messages are erroneous	Cease broadcast.

Notes.—
1. Ceasing the ranging function is accomplished by broadcasting a URA and σ^2_{UDRE} of "Do Not Use" for that SBAS satellite.
2. These parameters can be monitored by their impact on the received signal quality (C/N_0 impact), since that is the impact on the user.
3. Alarm limits are not specified because the induced error is acceptable, provided it is represented in the σ^2_{UDRE} and URA parameters. If the error cannot be represented, the ranging function must cease.

3.5.7.3.2.1 **Recommendation.**– *When the PRN mask is changed, SBAS should repeat the Type 1 message several times before referencing it in other messages to ensure that users receive the new mask.*

3.5.7.3.3 *Integrity data*. If SBAS does not provide the basic differential correction function, it shall transmit fast corrections, long-term corrections and fast correction degradation parameters coded to zero for all visible satellites indicated in the PRN mask. 3.5.7.3.3.1 If SBAS does not provide the basic differential correction function, SBAS shall indicate that the

satellite is unhealthy ("Do Not Use") if the pseudo-range error exceeds 150 metres.

3.5.7.3.3.2 If SBAS does not provide the basic differential correction function, SBAS shall indicate that the satellite is "Not Monitored" if the pseudo-range error cannot be determined.

3.5.7.3.3.3 If SBAS does not provide the basic differential correction function, SBAS shall transmit a $UDREI_i$ of 13 if the satellite is not "Do Not Use" or "Not Monitored".

3.5.7.3.3.4 The $IODF_j$ parameter in Type 2 to 5, 6 or 24 messages shall be equal to 3.

3.5.7.4 *Basic differential correction function*. If an SBAS provides a basic differential correction function, it shall comply with the requirements contained in this section in addition to the GNSS satellite status function requirements defined in 3.5.7.3.

3.5.7.4.1 *Performance of basic differential correction function*. Given any valid combination of active data, the probability of a horizontal error exceeding the HPL_{SBAS} (as defined in 3.5.5.6) for longer than 8 consecutive seconds shall be less than 10^{-7} in any hour, assuming a user with zero latency.

Note.— Active data is defined to be data that has not timed out per 3.5.8.1.2. This requirement includes core satellite constellation(s) and SBAS failures.

3.5.7.4.2 *Long-term corrections*. Except for SBAS satellites from the same service provider, SBAS shall determine and broadcast long-term corrections for each visible GNSS satellite (see *Note*) indicated in the PRN mask (PRN mask value equal to "1"). The long-term corrections shall be such that the core satellite constellation(s) satellite position error projected on the line-of-sight to any user in the satellite footprint after application of these long-term corrections is less than 256 metres. For each GLONASS satellite, SBAS shall translate satellite coordinates into WGS-84 as defined in 3.1.2.5.2 prior to determining the long-term corrections. For each GPS satellite, the broadcast IOD shall match both the GPS IODE and 8 LSBs of IODC associated with the clock and ephemeris data used to compute the corrections (3.1.1.3.1.4 and 3.1.1.3.2.2). Upon transmission of a new ephemeris by a GPS satellite, SBAS shall continue to use the old ephemeris to determine the fast and long-term error corrections for at least 2 minutes and not more than 4 minutes. For each GLONASS satellite, SBAS shall compute and broadcast an IOD that consists of a latency and a validity interval as defined in 3.5.4.4.1.

Note.— The criteria for satellite visibility include the locations of reference stations and the achieved mask angle at those locations.

3.5.7.4.2.1 **Recommendation.**– *To ensure accurate range rate corrections, SBAS should minimize discontinuities in the satellite ephemerides after application of long-term corrections.*

3.5.7.4.3 *Fast corrections*. SBAS shall determine fast corrections for each visible GNSS satellite indicated in the PRN mask (PRN mask value equal to "1"). Unless the IODF = 3, each time any fast correction data in Type j (j = 2, 3, 4 or 5) message changes, the $IODF_j$ shall sequence "0, 1, 2, 0, ...".

Note.— If there is an alarm condition, the $IODF_j$ may equal 3 (see 3.5.7.4.5).

3.5.7.4.4 *Timing data*. If data are provided for GLONASS, SBAS shall broadcast the timing message (Type 12 message) including GLONASS time offset as defined in Table B-82.

3.5.7.4.5 *Integrity data*. For each satellite for which corrections are provided, SBAS shall broadcast integrity data ($UDREI_i$ and, either a Type 27 or 28 message data to calculate δ_{UDRE}) such that the integrity requirement in 3.5.7.4.1 is met. If the fast corrections or long-term corrections exceed their coding range, SBAS shall indicate that the satellite is unhealthy ("Do Not Use"). If $\sigma^2_{i,UDRE}$ cannot be determined, SBAS shall indicate that the satellite is "Not Monitored".

If Type 6 message is used to broadcast $\sigma^2_{i,UDRE}$, then:

a) the $IODF_j$ shall match the $IODF_j$ for the fast corrections received in Type j message to which the $\sigma^2_{i,UDRE}$ apply; or

b) the $IODF_j$ shall equal 3 if the $\sigma^2_{i,UDRE}$ apply to all valid fast corrections received in Type j message which have not timed out.

3.5.7.4.6 *Degradation data*. SBAS shall broadcast degradation parameters (Type 7 message) to indicate the applicable time out interval for fast corrections and ensure that the integrity requirement in 3.5.7.4.1 is met.

3.5.7.4.7 SBAS shall broadcast service indication data as specified in 3.5.7.6.2 (Type 27 message) or clock-ephemeris covariance matrix data as specified in 3.5.7.6.3 (Type 28 message) to comply throughout the SBAS coverage area with the signal-in-space integrity requirements stated in Chapter 3, 3.7.2.4.

3.5.7.5 *Precise differential correction function*. If SBAS provides a precise differential correction function, it shall comply with the requirements contained in this section in addition to the basic differential correction function requirements in 3.5.7.4.

3.5.7.5.1 *Performance of precise differential correction function*. Given any valid combination of active data, the probability of an out-of-tolerance condition for longer than the relevant time-to-alert shall be less than 2×10^{-7} during any approach, assuming a user with zero latency. The time-to-alert shall be 5.2 seconds for an SBAS that supports precision approach operations, and 8 seconds for an SBAS that supports APV or NPA operations. An out-of-tolerance condition shall be defined as a horizontal error exceeding the HPL_{SBAS} or a vertical error exceeding the VPL_{SBAS} (as defined in 3.5.5.6). When an out-of-tolerance condition is detected, the resulting alert message (broadcast in a Type 2 to 5 and 6, 24, 26 or 27 messages) shall be repeated three times after the initial notification of the alert condition for a total of four times in 4 seconds.

Note 1.— Active data is defined to be data that has not timed out per 3.5.8.1.2. This requirement includes core satellite constellation(s) and SBAS failures.

Note 2.— Subsequent messages can be transmitted at the normal update rate.

3.5.7.5.2 *Ionospheric grid point (IGP) mask*. SBAS shall broadcast an IGP mask and $IODI_k$ (up to 11 Type 18 messages, corresponding to the 11 IGP bands). The IGP mask values shall indicate whether or not data are being provided for each IGP. If IGP Band 9 is used, then the IGP mask values for IGPs north of 55°N in Bands 0 through 8 shall be set to "0". If IGP Band 10 is used, then the IGP mask values for IGPs south of 55°S in Bands 0 through 8 shall be set to "0". The $IODI_k$ shall change when there is a change of IGP mask values in the kth band. The new IGP mask shall be broadcast in a Type 18 message before it is referenced in a related Type 26 message. The $IODI_k$ in Type 26 message shall equal the $IODI_k$ broadcast in the IGP mask message (Type 18 message) used to designate the IGPs for which data are provided in that message.

3.5.7.5.2.1 **Recommendation.**– *When the IGP mask is changed, SBAS should repeat the Type 18 message several times before referencing it in a Type 26 message to ensure that users receive the new mask. The same $IODI_k$ should be used for all bands.*

3.5.7.5.3 *Ionospheric corrections*. SBAS shall broadcast ionospheric corrections for the IGPs designated in the IGP mask (IGP mask values equal to "1").

3.5.7.5.4 *Ionospheric integrity data*. For each IGP for which corrections are provided, SBAS shall broadcast GIVEI data such that the integrity requirement in 3.5.7.5.1 is met. If the ionospheric correction or $\sigma^2_{i,GIVE}$ exceed their coding range, SBAS shall indicate the status "Do Not Use" (designated in the correction data, 3.5.4.6) for the IGP. If $\sigma^2_{i,GIVE}$ cannot be determined, SBAS shall indicate that the IGP is "Not Monitored" (designated in the GIVEI coding).

3.5.7.5.5 *Degradation data*. SBAS shall broadcast degradation parameters (Type 10 message) such that the integrity requirement in 3.5.7.5.1 is met.3.5.7.6 *OPTIONAL FUNCTIONS*

3.5.7.6.1 *Timing data*. If UTC time parameters are broadcast, they shall be as defined in 3.5.4.8 (Type 12 message).

3.5.7.6.2 *Service indication*. If service indication data are broadcast, they shall be as defined in 3.5.4.9 (Type 27 message) and Type 28 messages shall not be broadcast. The IODS in all Type 27 messages shall increment when there is a change in any Type 27 message data.

3.5.7.6.2.1 If service indication data are broadcast, the δUDRE indicator-inside parameter in Type 27 message shall be equal to 0.

Note.— This requirement ensures compatibility with equipment developed according to RTCA/DO-229. Further information is available in Attachment D, section 6.5.7.

3.5.7.6.3 *Clock-ephemeris covariance matrix*. If clock-ephemeris covariance matrix data are broadcast, they shall be broadcast for all monitored satellites as defined in 3.5.4.10 (Type 28 message) and Type 27 messages shall not be broadcast.

3.5.7.7 *MONITORING*

3.5.7.7.1 *SBAS radio frequency monitoring*. The SBAS shall monitor the SBAS satellite parameters shown in Table B-53 and take the indicated action.

Note.— In addition to the radio frequency monitoring requirements in this section, it will be necessary to make special provisions to monitor pseudo-range acceleration specified in Chapter 3, 3.7.3.4.3.5, and carrier phase noise specified in 3.5.2.2 and correlation loss in 3.5.2.5, unless analysis and testing shows that these parameters cannot exceed the stated limits.

3.5.7.7.2 *Data monitoring*. SBAS shall monitor the satellite signals to detect conditions that will result in improper operation of differential processing for airborne receivers with the tracking performance defined in Attachment D, 8.11.

3.5.7.7.2.1 The ground subsystem shall use the strongest correlation peak in all receivers used to generate the pseudo-range corrections.

3.5.7.7.2.2 The ground subsystem shall also detect conditions that cause more than one zero crossing for airborne receivers that use the Early-Late discriminator function as defined in Attachment D, 8.11.

3.5.7.7.2.3 The monitor action shall be to set UDRE to “Do Not Use” for the satellite.

3.5.7.7.2.4 SBAS shall monitor all active data that can be used by any user within the service area.

3.5.7.7.2.5 SBAS shall raise an alarm within 5.2 seconds if any combination of active data and GNSS signals-in-space results in an out-of-tolerance condition for precision approach (3.5.7.5.1).

3.5.7.7.2.6 SBAS shall raise an alarm within 8 seconds if any combination of active data and GNSS signals-in-space results in an out-of-tolerance condition for en-route through APV I (3.5.7.4.1).

Note.— The monitoring applies to all failure conditions, including failures in core satellite constellation(s) or SBAS satellites. This monitoring assumes that the aircraft element complies with the requirements of RTCA/DO-229D with Change 1, except as superseded by 3.5.8 and Attachment D, 8.11.

3.5.7.7.3 *IOD monitoring*. SBAS shall monitor the GPS IODE values for possible invalid transmissions of values used previously for a different set of ephemeris parameters within the time interval(s) specified in 3.1.1.3.2.2, and take appropriate action to ensure the integrity of its broadcast corrections, if such an invalid use is detected.

Note 1.— The IOD uniqueness is granted by design in the case of SBAS augmenting GLONASS satellites.

Note 2.— The GPS IODC (as per 3.1.1.3.1.4) is not currently used in the processing of GPS L1 navigation messages in an SBAS receiver mode. Therefore, monitoring is not specifically required.

3.5.7.8 *Robustness to core satellite constellation(s) failures*. Upon occurrence of a core satellite constellation(s) satellite anomaly, SBAS shall continue to operate normally using the available healthy satellite signals that can be tracked.

3.5.8 L1 SBAS AIRCRAFT ELEMENTS

Note 1.— The parameters that are referred to in this section are defined in 3.5.4.

Note 2.— Some of the requirements of this section may not apply to equipment that integrates additional navigation sensors, such as equipment that integrates SBAS with inertial navigation sensors.

3.5.8.1 *SBAS-capable GNSS receiver*. Except as specifically noted, the SBAS-capable GNSS receiver shall process the signals of the SBAS and meet the requirements specified in 3.1.3.1 (GPS receiver) and/or 3.2.3.1 (GLONASS receiver). Pseudo-range measurements for each satellite shall be smoothed using carrier measurements and a smoothing filter which deviates less than 0.25 metre within 200 seconds after initialization, relative to the steady-state response of the filter defined in 3.6.5.1 in the presence of drift between the code phase and integrated carrier phase of up to 0.018 metre per second.

3.5.8.1.1 *GEO satellite acquisition*. The receiver shall be able to acquire and track GEO satellites for which a stationary receiver at the user receiver location would experience a Doppler shift as large as ±450 Hz.

3.5.8.1.2 *Conditions for use of data*. The receiver shall use data from an SBAS message only if the CRC of this message has been verified. Reception of a Type 0 message from an SBAS satellite shall result in deselection of that satellite for at least one minute and all data from that satellite shall be discarded, except that there is no requirement to discard data from Type 12 and Type 17 messages. For GPS satellites, the receiver shall apply long-term corrections only if the IOD matches both the IODE and 8 least significant bits of the IODC. For GLONASS satellites, the receiver shall apply long-term corrections only if the time of reception (t_r) of the GLONASS ephemeris is inside the following IOD validity interval, as defined in 3.5.4.4.1:

$$t_{LT} - L - V \leq t_r \leq t_{LT} - L$$

Note 1.— For SBAS satellites, there is no mechanism that links GEO ranging function data (Type 9 message) and long-term corrections.

Note 2.— This requirement does not imply that the receiver has to stop tracking the SBAS satellite.

3.5.8.1.2.1 *SBAS satellite identification*. Upon acquisition or re-acquisition of an SBAS satellite, the receiver shall not use SBAS satellite data unless the calculated separation between the satellite position derived from its GEO ranging function parameters and the satellite position derived from the almanac message most recently received from the same service provider within the last 15 minutes is less than 200 km.

Note.— This check ensures that a receiver will not mistake one SBAS satellite for another due to cross-correlation during acquisition or re-acquisition.

3.5.8.1.2.2 The receiver shall use integrity or correction data only if the IODP associated with that data matches the IODP associated with the PRN mask.

3.5.8.1.2.3 The receiver shall use SBAS-provided ionospheric data (IGP vertical delay estimate and $GIVEI_i$) only if the $IODI_k$ associated with that data in a Type 26 message matches the $IODI_k$ associated with the relevant IGP band mask transmitted in a Type 18 message.

3.5.8.1.2.4 The receiver shall use the most recently received integrity data for which the $IODF_j$ equals 3 or the $IODF_j$ matches the $IODF_j$ associated with the fast correction data being applied (if corrections are provided).

3.5.8.1.2.5 The receiver shall apply any regional degradation to the $\sigma^2_{i,UDRE}$ as defined by a Type 27 service message. If a Type 27 message with a new IODS indicates a higher δ_{UDRE} for the user location, the higher δ_{UDRE} shall be applied immediately. A lower δ_{UDRE} in a new Type 27 message shall not be applied until the complete set of messages with the new IODS has been received.

3.5.8.1.2.6 The receiver shall apply satellite-specific degradation to the $\sigma^2_{i,UDRE}$ as defined by a Type 28 clock-ephemeris covariance matrix message. The δ_{UDRE} derived from a Type 28 message with an IODP matching that of the PRN mask shall be applied immediately.

3.5.8.1.2.7 In the event of a loss of four successive SBAS messages during an SBAS-based approach operation with a HAL of 40 m or a VAL of 50 m or less, the receiver shall invalidate all UDREI data from that SBAS satellite.4

3.5.8.1.2.8 The receiver shall not use a broadcast data parameter after it has timed out as defined in Table B-94.

3.5.8.1.2.9 The receiver shall not use a fast correction if Δt for the associated RRC exceeds the time-out interval for fast corrections, or if the age of the RRC exceeds $8\Delta t$.

3.5.8.1.2.10 The calculation of the RRC shall be reinitialized if a "Do Not Use" or "Not Monitored" indication is received for that satellite.

3.5.8.1.2.11 For SBAS-based precision approach or APV operations, the receiver shall only use satellites with elevation angles at or above 5 degrees.

3.5.8.1.2.12 The receiver shall no longer support SBAS-based precision approach or APV operation using a particular satellite if the $UDREI_i$ received is greater than or equal to 12.

Table B-94. Data time-out intervals

Data	*Associated message types*	*En-route, terminal, NPA time-out*	*Precision approach, APV time-out*
Clock-ephemeris covariance matrix	28	360	240
SBAS in test mode	0	N/A	N/A
PRN mask	1	600 s	600 s
UDREI	2 to 6, 24	18 s	12 s
Fast corrections	2 to 5, 24	(see Table B-95)	(see Table B-95)
Long-term corrections	24, 25	360 s	240 s
GEO ranging function data	9	360 s	240 s
Fast correction degradation	7	360 s	240 s
Degradation parameters	10	360 s	240 s
Ionospheric grid mask	18	1 200 s	1 200 s
Ionospheric corrections, GIVEI	26	600 s	600 s
Timing data	12	86 400 s	86 400 s
GLONASS time offset	12	600 s	600 s

Data	*Associated message types*	*En-route, terminal, NPA time-out*	*Precision approach, APV time-out*
Almanac data	17	None	None
Service level	27	86 400 s	86 400 s

Note.— The time-out intervals are defined from the end of the reception of a message.

Table B-95. Fast correction time-out interval evaluation

Fast correction degradation factor indicator (ai_i)	*NPA time-out interval for fast corrections (I_{fc})*	*PA/APV time-out interval for fast corrections (I_{fc})*
0	180 s	120 s
1	180 s	120 s
2	153 s	102 s
3	135 s	90 s
4	135 s	90 s
5	117 s	78 s
6	99 s	66 s
7	81 s	54 s
8	63 s	42 s
9	45 s	30 s
10	45 s	30 s
11	27 s	18 s
12	27 s	18 s
13	27 s	18 s
14	18 s	12 s
15	18 s	12 s

3.5.8.2 *Ranging function*

3.5.8.2.1 *Precision approach and APV operations*. The root-mean-square (1 sigma) of the total airborne error contribution to the error in a corrected pseudo-range for an SBAS satellite at the minimum received signal power level (Chapter 3, 3.7.3.4.4.3) under the worst interference environment as defined in 3.7 shall be less than or equal to 1.8 metres, excluding multipath effects, tropospheric and ionospheric residual errors.

Note.— The aircraft element will bound the errors caused by multipath and troposphere (3.5.8.4.1). For the purpose of predicting service, the multipath error is assumed to be less than 0.6 metres (1 sigma).

3.5.8.2.2 *Departure, en-route, terminal, and non-precision approach operations*. The root-mean-square (1 sigma) of the total airborne contribution to the error in a corrected pseudo-range for an SBAS satellite at the minimum received signal power level (Chapter 3, 3.7.3.4.5.3) under the worst interference environment as defined in 3.7 shall be less than or equal to 5 metres, excluding multipath, tropospheric and ionospheric errors.

3.5.8.2.3 *SBAS satellite position*

3.5.8.2.3.1 *Position computation*. The receiver shall decode Type 9 message and determine the code phase offset and position (X_G, Y_G, Z_G) of the SBAS satellite.

3.5.8.2.3.2 *SBAS satellite identification*. The receiver shall discriminate between SBAS satellites.

Note.— This requirement applies to false acquisition of a satellite due to cross-correlation.

3.5.8.2.4 *Almanac data*

3.5.8.2.4.1 **Recommendation.**– *The almanac data provided by the SBAS should be used for acquisition.*

Note.— Health and status information provided in the GEO almanac data does not override or invalidate data provided in other SBAS messages. The use of bits 0 to 2 by airborne equipment is optional; there are no requirements covering their usage.

3.5.8.3 *GNSS satellite status function*. The receiver shall exclude satellites from the position solution if they are identified as "Do Not Use" by SBAS. If SBAS-provided integrity is used, the receiver shall not be required to exclude GPS satellites based on the GPS-provided ephemeris health flag as required in 3.1.3.1.1 or to exclude GLONASS satellites based on GLONASS-provided ephemeris health flag as required in 3.2.3.1.1.

Note 1.— In the case of a satellite designated marginal or unhealthy by the core satellite constellation(s) health flag, SBAS may be able to broadcast ephemeris and clock corrections that will allow the user to continue using the satellite.

Note 2.— If satellites identified as "Not Monitored" by SBAS are used in the position solution, integrity is not provided by SBAS. ABAS or GBAS may be used to provide integrity, if available.

3.5.8.4 *BASIC AND PRECISE DIFFERENTIAL FUNCTIONS*

3.5.8.4.1 *Core satellite constellation(s) ranging accuracy*. The root-mean-square (1 sigma) of the total airborne contribution to the error in a corrected pseudo-range for a GPS satellite at the minimum and maximum received signal power level (Chapter 3, 3.7.3.1.1.8.6) under the worst interference environment as defined in 3.7 shall be less than or equal to 0.36 metres for minimum signal level and 0.15 metres for maximum signal level, excluding multipath effects, tropospheric and ionospheric residual errors. The RMS of the total airborne contribution to the error in a corrected pseudo-range for a GLONASS satellite at the minimum received signal power level (Chapter 3, 3.2.5.4) under the worst interference environment as defined in 3.7 shall be less than or equal to 0.8 metres, excluding multipath effects, tropospheric and ionospheric residual errors.

3.5.8.4.2 *Precision approach and APV operations*

3.5.8.4.2.1 The receiver shall obtain correction and integrity data for all satellites in the position solution from the same SBAS signal (PRN code).

3.5.8.4.2.2 The receiver shall compute and apply long-term corrections, fast corrections, range rate corrections and the broadcast ionospheric corrections. For GLONASS satellites, the ionospheric corrections received from the SBAS shall be multiplied by the square of the ratio of GLONASS to GPS frequencies $(f_{GLONASS}/f_{GPS})^2$.

3.5.8.4.2.3 The receiver shall use a weighted-least-squares position solution.

3.5.8.4.2.4 The receiver shall apply a tropospheric model such that residual pseudo-range errors have a mean value (μ) less than 0.15 metres and a 1 sigma deviation less than 0.07 metres.

Note.— A model was developed that meets this requirement. Guidance is provided in Attachment D, 6.5.4.

3.5.8.4.2.5 The receiver shall compute and apply horizontal and vertical protection levels defined in 3.5.5.6. In this computation, $\sigma_{i,tropo}$ shall be:

$$\frac{1.001}{\sqrt{0.002001 + \sin^2(\theta_i)}} \times 0.12 \text{ m}$$

where θ_i is the elevation angle of the ith satellite.

In addition, $\sigma_{i,air}$ shall satisfy the condition that a normal distribution with zero mean and a standard deviation equal to $\sigma_{i,air}$ bounds the error distribution for residual aircraft pseudo-range errors as follows:

$$\int_y^\infty f_n(x)dx \le Q\left(\frac{y}{\sigma}\right) \text{ for all } \frac{y}{\sigma} \ge 0 \text{ and}$$

$$\int_{-\infty}^{-y} f_n(x)dx \le Q\left(\frac{y}{\sigma}\right) \text{ for all } \frac{y}{\sigma} \ge 0$$

where

$f_i(x)$ = probability density function of the residual aircraft pseudo-range error and

$Q(x)$ = $\frac{1}{\sqrt{2\pi}}\int_x^\infty e^{-\frac{t^2}{2}}dt$

Note.— The standard allowance for airborne multipath defined in 3.6.5.5.1 may be used to bound the multipath errors.

3.5.8.4.2.6 The parameters that define the approach path for a single precision approach or APV shall be contained in the FAS data block.

Note 1.— The FAS path is a line in space defined by the landing threshold point/fictitious threshold point (LTP/FTP), flight path alignment point (FPAP), threshold crossing height (TCH) and glide path angle (GPA). The local level plane for the approach is a plane perpendicular to the local vertical passing through the LTP/FTP (i.e. tangent to the ellipsoid at the LTP/FTP). Local vertical for the approach is normal to the WGS-84 ellipsoid at the LTP/FTP. The glide path intercept point (GPIP) is where the final approach path intercepts the local level plane.

Note 2.— For SBAS, FAS data blocks are stored in airborne databases. The format of the data for validation of a cyclic redundancy check is shown in Attachment D, 6.6. It differs from the GBAS FAS data block in 3.6.4.5.

3.5.8.4.2.6.1 L1 SBAS FAS data block parameters shall be as follows (see Table B-96):

Note 1.— See 3.5.15.3.5 for the definitions of operation type, SBAS service provider ID and approach performance designator applicable to DFMC SBAS receivers.

Note 2.— "L1 SBAS receivers" refers to receivers that meet the specifications of RTCA/DO-229.

Operation type: straight-in approach procedure or other operation types applicable to L1 SBAS receivers.

Coding: 0 = straight-in approach procedure
1 to 15 = spare

SBAS service provider ID: shall indicate the service provider associated with this FAS data block.

Coding: 0-13 = Table B-65.
14 = FAS data block is to be used with GBAS only.
15 = FAS data block can be used with any SBAS service provider.

Airport ID: the three- or four-letter designator used to designate an airport.

Coding: Each character is coded using the lower 6 bits of its IA-5 representation. For each character, b_1 is transmitted first, and 2 zero bits are appended after b_6, so that 8 bits are transmitted for each character. Only upper case letters, numeric digits and IA-5 "space" are used. The rightmost character is transmitted first. For a three-character airport ID, the rightmost (first transmitted) character shall be IA-5 "space".

Runway number: the runway orientation, point-in-space final approach course, or SBAS circling only procedure course rounded to the nearest 10 degrees and truncated to two characters.

Coding: 01 to 36 = runway number

Note.— For heliport operations, the runway number value is the integer nearest to one tenth of the final approach course, except when that integer is zero, in which case the runway number is 36.

Runway letter: the one-letter designator used, as necessary, to differentiate between parallel runways.

Coding: 0 = no letter
1 = R (right)
2 = C (centre)
3 = L (left)

Approach performance designator: this field shall not be used by L1 SBAS receivers.

Table B-96. Final approach segment (FAS) data block

Data content	*Bits used*	*Range of values*	*Resolution*
Operation type	4	0 to 15	1
SBAS service provider ID	4	0 to 15	1
Airport ID	32	—	—
Runway number	6	01 to 36	1
Runway letter	2	—	—
Approach performance designator	3	0 to 7	1
Route indicator	5	—	—
Reference path data selector	8	0 to 48	1
Reference path identifier	32	—	—
LTP/FTP latitude	32	±90.0°	0.0005 arcsec
LTP/FTP longitude	32	±180.0°	0.0005 arcsec
LTP/FTP height	16	–512.0 to 6 041.5 m	0.1 m
ΔFPAP latitude	24	±1.0°	0.0005 arcsec
ΔFPAP longitude	24	±1.0°	0.0005 arcsec
Approach TCH (*Note 1*)	15	0 to 1 638.35 m or 0 to 3 276.7 ft	0.05 m or 0.1 ft
Approach TCH units selector	1	—	—
Glide path angle (GPA)	16	0 to 90.0°	0.01°
Course width	8	80 to 143.75 m	0.25 m
ΔLength offset	8	0 to 2 032 m	8 m
Horizontal alert limit (HAL)	8	0 to 51.0 m	0.2 m
Vertical alert limit (VAL) (*Note 2*)	8	0 to 51.0 m	0.2 m
Final approach segment CRC	32		—

Note 1.— Information can be provided in either feet or metres as indicated by the approach TCH unit selector.

Note 2.— A VAL of 0 indicates that the vertical deviations cannot be used (i.e., a lateral only approach). This does not preclude providing advisory vertical guidance on such approaches, refer to FAA AC 20-138.

Route indicator: a “blank” or the one-letter identifier used to differentiate between multiple procedures to the same runway end.

Note.— Procedures are considered to be different even if they only differ by the missed approach segment.

Coding: The letter is coded using bits b_1 through b5 of its IA-5 representation. Bit b_1 is transmitted first. Only upper case letters, excluding “I” and “O”, or IA-5 “space” (blank) are used. Blank indicates that there is only one procedure to the runway end. For multiple procedures to the same runway end, the route indicator is coded using a letter starting from Z and moving backward in the alphabet for additional procedures.

Reference path data selector (RPDS): this field is not used by SBAS.

Reference path identifier (RPI): four characters used to uniquely designate the reference path. The four characters consist of three alphanumeric characters plus a blank or four alphanumeric characters.

Note.— The best industry practice matches the 2nd and 3rd character encoding to the encoded runway number. The last character is a letter starting from A or a "blank."

Coding: Each character is coded using bits b_1 through b6 of its IA-5 representation. For each character, b_1 is transmitted first, and 2 zero bits are appended after b_6 so that 8 bits are transmitted for each character. Only upper case letters, numeric digits and IA-5 "space" are used. The rightmost character is transmitted first. For a three-character reference path identifier, the rightmost (first transmitted) character shall be IA-5 "space".

Note.— The LTP/FTP is a point over which the FAS path passes at a height above the LTP/FTP height specified by the TCH.

*LTP/FTP latitud*e: the latitude of the LTP/FTP point in arc seconds.

Coding: positive value denotes north latitude.
negative value denotes south latitude.

LTP/FTP longitude: the longitude of the LTP/FTP point in arc seconds.

Coding: positive value denotes east longitude.
negative value denotes west longitude.

LTP/FTP height: the height of the LTP/FTP above the WGS-84 ellipsoid.

Coding: This field is coded as an unsigned fixed-point number with an offset of –512 metres. A value of zero in this field places the LTP/FTP 512 metres below the earth ellipsoid.

Note.— The FPAP is a point at the same height as the LTP/FTP that is used to define the alignment of the approach. The origin of angular deviations in the lateral direction is defined to be 305 metres (1 000 ft) beyond the FPAP along the lateral FAS path. For an approach aligned with the runway, the FPAP is at or beyond the stop end of the runway.

Δ*FPAP latitude*: the difference of latitude of the runway FPAP from the LTP/FTP in arc seconds.

Coding: Positive value denotes the FPAP latitude north of LTP/FTP latitude.
Negative value denotes the FPAP latitude south of the LTP/FTP latitude.

Δ*FPAP longitude*: the difference of longitude of the runway FPAP from the LTP/FTP in arc seconds.

Coding: Positive value indicates the FPAP longitude east of LTP/FTP longitude.
Negative value indicates the FPAP longitude west of LTP/FTP longitude.

Approach TCH: the height of the FAS path above the LTP/FTP defined in either feet or metres as indicated by the TCH units selector.

Approach TCH units selector: the units used to describe the TCH.

Coding: 0 = feet
1 = metres

Glide path angle (GPA): the angle of the FAS path with respect to the horizontal plane tangent to the WGS-84 ellipsoid at the LTP/FTP.

Course width: the lateral displacement from the path defined by the FAS at the LTP/FTP at which full-scale deflection of a course deviation indicator is attained.

Coding: This field is coded as an unsigned fixed-point number with an offset of 80 metres. A value of zero in this field indicates a course width of 80 metres at the LTP/FTP.

ΔLength offset: the distance from the stop end of the runway to the FPAP.

Coding: 1111 1111 = not provided

HAL: Horizontal alert limit to be used during the approach in metres.

VAL: Vertical alert limit to be used during the approach in metres.

Final approach segment CRC: the 32-bit CRC appended to the end of each FAS data block in order to ensure approach data integrity. The 32-bit final approach segment CRC shall be calculated in accordance with 3.9. The length of the CRC code shall be k = 32 bits.

The CRC generator polynomial shall be:

$$G(x) = x^{32} + x^{31} + x^{24} + x^{22} + x^{16} + x^{14} + x^{8} + x^{7} + x^{5} + x^{3} + x + 1$$

The CRC information field, M(x), shall be:

$$M(x) = \sum_{i=1}^{288} m_i \, x^{288-i} = m_1 x^{287} + m_2 x^{286} + \ldots + m_{288} x^{0}$$

M(x) shall be formed from all bits of the associated FAS data block, excluding the CRC. Bits shall be arranged in the order transmitted, such that m_1 corresponds to the LSB of the operation type field, and m_{288} corresponds to the MSB of the Vertical Alert Limit (VAL) field. The CRC shall be ordered such that r_1 is the LSB and r_{32} is the MSB.

3.5.8.4.2.6.2 For precision approach and APV operations, the service provider ID broadcast Type 17 message shall be identical to the service provider ID in the FAS data block, except if ID equals 15 in the FAS data block.

Note.— If the service provider ID in the FAS data block equals 15, then any service provider can be used. If the service provider ID in the FAS data block equals 14, then SBAS precise differential corrections cannot be used for the approach.

3.5.8.4.2.6.3 *SBAS FAS data points accuracy*. The survey error of all the FAS data points, relative to WGS-84, shall be less than 0.25 metres vertical and 1 metre horizontal.

3.5.8.4.3 *Departure, en-route, terminal, and non-precision approach operations*

3.5.8.4.3.1 The receiver shall compute and apply long-term corrections, fast corrections and range rate corrections.

3.5.8.4.3.2 The receiver shall compute and apply ionospheric corrections.

Note.— Two methods of computing ionospheric corrections are provided in 3.1.2.4 and 3.5.5.5.2.

3.5.8.4.3.3 The receiver shall apply a tropospheric model such that residual pseudo-range errors have a mean value (μ) less than 0.15 metres and a standard deviation less than 0.07 metres.

Note.— A model was developed that meets this requirement. Guidance is provided in Attachment D, 6.5.4.

3.5.8.4.3.4 The receiver shall compute and apply horizontal and vertical protection levels as defined in 3.5.5.6. In this computation, σ_{tropo} shall be obtained either from the formula in 3.5.8.4.2.5, which can be used for elevation angles not less than 4 degrees, or from the alternate formula below, which can be used for elevation angles not less than 2 degrees:

$$\frac{1.001}{\sqrt{0.002001 + \sin^2(\theta_i)}} \times (1 + 0.015 \times (\max(0.4 - \theta_i))^2) \times 0.12 \text{ m}$$

where θ_i is the elevation angle of the ith satellite.

In addition, $\sigma_{i,air}$ shall satisfy the condition that a normal distribution with zero mean and standard deviation equal to $\sigma_{i,air}$ bounds the error distribution for residual aircraft pseudo-range errors as follows:

$$\int_{y}^{\infty} f_i(x)dx \leq Q\left(\frac{y}{\sigma}\right) \text{ for all } \frac{y}{\sigma} \geq 0 \text{ and}$$

$$\int_{-\infty}^{-y} f_i(x)dx \leq Q\left(\frac{y}{\sigma}\right) \text{ for all } \frac{y}{\sigma} \geq 0$$

where

$f_i(x)$ = probability density function of the residual aircraft pseudo-range error and

$Q(x)$ = $\frac{1}{\sqrt{2\pi}} \int_{x}^{\infty} e^{-\frac{t^2}{2}} dt$

Note.— The standard allowance for airborne multipath defined in 3.6.5.5.1 may be used to bound the multipath errors.

3.5.8.4.4 **Recommendation.**– *For departure, en-route, terminal, and non-precision approach operations, the receiver should use the broadcast ionospheric corrections, when available, and a tropospheric model with performance equal to that specified in 3.5.8.4.3.*

3.5.9 SBAS L5 RF CHARACTERISTICS

3.5.9.1 *Carrier frequency stability*. The short-term stability of the L5 carrier frequency (square root of the Allan variance) at the output of the satellite transmit antenna shall be better than 6.7×10^{-11} over 1 to 10 seconds.

3.5.9.2 *Carrier phase noise*. The phase noise spectral density of the unmodulated carrier shall be such that a phase locked loop of 10 Hz one-sided noise bandwidth is able to track the carrier to an accuracy of 0.1 radian (1 sigma).

3.5.9.3 *Spurious emissions*. Spurious emissions shall be at least 40 dB below the unmodulated carrier power over all frequencies.

3.5.9.4 *Code/carrier frequency coherence*

3.5.9.4.1 For L5, the rate of change of code minus carrier shall be less than 0.5 metres/second.

3.5.9.4.2 For DFMC SBAS ranging satellites:

Note.— See 3.5.1.1 and 3.5.1.2 for a description of the smoothing filters to be used for the requirements below.

3.5.9.4.2.1 The root-mean-square (RMS) value over 3 600 seconds of the difference between the L5 code pseudo-range and the L5 code pseudo-range smoothed using a 10-second carrier smoothing of the code based pseudo-range shall be less than 0.200 metres.

3.5.9.4.2.2 The RMS value over 86 400 seconds of the difference between the L5 code pseudo-range and the L5 code pseudo-range smoothed using a 100-second carrier smoothing of the code based pseudo-range shall be less than 0.255 metres.

3.5.9.4.2.3 The RMS value over 3 600 seconds of the difference between the L1 code pseudo-range and the L1 code pseudo-range smoothed using a 10-second carrier smoothing of the code based pseudo-range shall be less than 0.15 metres.

3.5.9.4.2.4 The RMS value over 86 400 seconds of the difference between the L1 code pseudo-range and the L1 code pseudo-range smoothed using a 100-second carrier smoothing of the code based pseudo-range shall be less than 0.19 metres.

3.5.9.4.2.5 *L1 and L5 short-term fractional code/carrier frequency coherence*. For L1 and L5 signals broadcast by an SBAS ranging satellite, the RMS value over 3 600 seconds of the difference between the ionosphere-free pseudo-range and the ionosphere-free pseudo-range smoothed using a 10 second carrier smoothing of the L1/L5 ionosphere-free pseudo-range combination shall be less than 0.29 metres.

3.5.9.4.2.6 *L1 and L5 long-term fractional code/carrier frequency coherence*. For L1 and L5 signals broadcast by an SBAS ranging satellite, the RMS value over 86 400 seconds of the difference between the ionosphere-free pseudo-range and the ionosphere-free pseudo-range smoothed using a 100 seconds carrier smoothing of the L1/L5 ionosphere-free pseudo-range combination shall be less than 0.37 metres.

3.5.9.5 *Correlation loss*. The loss in the recovered signal power due to imperfections in the signal modulation and waveform distortion shall not exceed 1 dB.

Note.— The correlation loss is defined as the ratio of output powers from a perfect correlator for two cases:

a) the actual received SBAS L5 signal correlated against a perfect unfiltered pseudo-random noise reference; and

b) a perfect unfiltered pseudo-random noise signal normalized to the same total power as the SBAS signal in case a), correlated against a perfect unfiltered pseudo-random noise reference.

3.5.9.6 *Maximum code phase deviation*. The L5 broadcast signal shall not deviate from the equivalent SBAS network time (SNT) for DFMC SBAS by more than $\pm 2^{-10}$ seconds.

3.5.9.7 *Code/data coherence*. Each 2-millisecond symbol shall be synchronous with every other code epoch.

3.5.9.8 *Message synchronization*. The leading edge of the first symbol that depends on the first bit of the current message shall be broadcast from the SBAS satellite synchronous with a 1-second epoch of SNT for DFMC SBAS.

Note.— The SNT time reference is provided by the Type 37 message as described in 3.5.11.5.

3.5.9.9 *Convolutional and bi-binary encoding*

3.5.9.9.1 *Convolution encoding*. A 250-bit-per-second data stream shall be encoded at a rate of 2 symbols per bit using a convolutional code with a constraint length of 7 to yield 500 symbols per second. The convolutional encoder logic arrangement shall be as illustrated in Figure B-24 with the G3 output selected for the first half of each 4-millisecond data bit period.

3.5.9.9.2 *Bi-binary encoding*. In addition to the convolution coding detailed in paragraph 3.5.9.9.1, the convolution encoded 500 symbols per second data channel shall be further bi-binary encoded such that a "0" symbol becomes a "01" pair and a "1" symbol becomes a "10" pair resulting in a data channel operating at a 1 kHz rate.

Note.— See Attachment D, 6.4.4.

3.5.9.10 *Pseudo-random noise (PRN) codes for L5*. Each PRN code shall be a 10 230-bit code and be added Modulo-2 with the navigation message data stream generated in 3.5.9.9.2.

Note.— Additional information on the PRN code is given in IS-GPS-705F.

The initial state for the XA shift register shall be "1111111111111", and the initial state for the XBi register shall be as illustrated in Table B-97.

Table B-97. SBAS L5 PRN codes

PRN code number	*Initial XB code state (I channel) (Note 1*	*XB code advance (chips) (I channel) (Note 2)*
120	1101001100010	2 797
121	1100011001100	934
122	1000011000101	3 023
123	1111011011011	3 632
124	0000001100100	1 330
125	1101110000101	4 909
126	1100001000010	4 867
127	0001101001101	1 183
128	1010100101011	3 990
129	1111011110100	6 217
130	1111111101100	1 224
131	0000010000111	1 733
132	1111110000010	2 319
133	0011100111011	3 928
134	1101100010101	2 380
135	0101011111011	841

PRN code number	*Initial XB code state (I channel) (Note 1*	*XB code advance (chips) (I channel) (Note 2)*
136	0001100011011	5 049
137	0001101110111	7 027
138	1110011110000	1 197
139	0111100011111	7 208
140	0011101110000	8 000
141	1111001001000	152
142	0001101110010	6 762
143	0101100111100	3 745
144	0010010111101	4 723
145	1101110110011	5 502
146	0011110011111	4 796
147	1001010101111	123
148	0111111101111	8 142
149	0000100100001	5 091
150	1110001101011	7 875
151	1111010010001	330
152	1011010111101	5 272
153	0001101110000	4 912
154	0000010111100	374
155	0100101111100	2 045
156	1110110111010	6 616
157	1101110101011	6 321
158	1101000110001	7 605

3.5.10 DATA STRUCTURE ON SBAS L5 SIGNAL

Note.— Messages broadcast for use under DFMC SBAS service are independent from those broadcast for use under L1 SBAS service. Information broadcast on SBAS L5 signal is used only for DFMC SBAS service solutions using dual-frequency measurements from core constellations.

3.5.10.1 *Format summary*. All messages shall consist of a preamble, a message type identifier, a data field and a cyclic redundancy check as illustrated in Figure B-28.

3.5.10.2 *Preamble*. For L5, the preamble shall consist of the sequence of bits "0101 1100 0110 1001 0011 1010", distributed over six successive blocks. The start of every 24-bit preamble shall be synchronous with SNT time of day in seconds Modulo 6 seconds.

3.5.10.3 *Message type identifier*. The L5 message type identifier shall be a 6-bit value identifying the message type as defined in Table B-98. The message type identifier shall be transmitted MSB first.

Table B-98. L5 broadcast message types

L5 message type	*Contents*
0	"Do Not Use" – content applies to DFMC SBAS service only
1-30	Spare
31	SBAS satellite mask
32	Satellite clock-ephemeris corrections and covariance matrix
33	Spare
34, 35, 36	Integrity information (DFREI and DFRECI)
37	Degradation parameters and DFREI scale table
38	Spare
39	SBAS satellite clock, ephemeris and covariance matrix - 1
40	SBAS satellite clock, ephemeris and covariance matrix - 2
41	Spare
42	SNT-to-UTC offset
43-46	Spare
47	SBAS satellites almanacs
48-61	Spare
62	Reserved – content applies to DFMC SBAS service only
63	Null message – content applies to DFMC SBAS service only

Note.— L1 messages (Table B-62) are for use with L1 SBAS service and L5 messages (Table B-98) are for use with DFMC SBAS service. Types 0, 62 and 63 messages are used independently by both L1 SBAS and DFMC SBAS services and their contents only apply to their service.

3.5.10.4 *Data field*. The L5 data field shall be 216 bits as defined in 3.5.13. Each data field parameter shall be transmitted MSB first.

3.5.10.5 *Cyclic redundancy check (CRC)*. The SBAS message CRC code on L5 shall be calculated in accordance with 3.9.

3.5.10.5.1 The length of the CRC code shall be k = 24 bits.

3.5.10.5.2 The CRC generator polynomial shall be:

$$G(x) = x^{24} + x^{23} + x^{18} + x^{17} + x^{14} + x^{11} + x^{10} + x^7 + x^6 + x^5 + x^4 + x^3 + x + 1$$

3.5.10.5.3 The CRC information field, M(x), shall be:

$$M(x) = \sum_{i=1} m_i \, x^{226-i} = m_1 x^{225} + m_2 x^{224} + \ldots + m_{226} x^0$$

3.5.10.5.4 M(x) shall be formed from the 4-bit SBAS message preamble, 6-bit message type identifier, and 216-bit data field. Bits shall be arranged in the order transmitted from the SBAS satellite, such that m_1 corresponds to the first transmitted bit of the preamble, and m_{226} corresponds to bit 216 of the data field.

3.5.10.5.5 The CRC code r-bits shall be ordered such that r_1 is the first bit transmitted and r_{24} is the last bit transmitted.

3.5.11 DFMC SBAS DATA CONTENT

3.5.11.1 *Satellite mask parameters*. The satellite mask parameters shall be as follows:

SBAS satellite mask: the satellite mask shall be a set of 214 bits such that each bit represents one specific satellite as shown in Table B-99 and the value of that bit shall indicate whether augmentation is, or is not, provided for that satellite. It shall be broadcast in the Type 31 message.

Note.— The satellite mask can set up to 92 satellites from the 214 possible satellites available for augmentation.

Satellite slot number: a unique number representing a specific slot in the SBAS satellite mask (slots numbers range from 1 to 214) assigned to a specific satellite for which augmentation can be provided.

Note 1.— The first transmitted bit of the satellite mask corresponds to GPS PRN code number 1.

Note 2.— This parameter is also broadcast in Type 32 messages to identify the satellite to which the corrections apply.

Table B-99. Satellite slot number assignments

Satellite slot number	*Assignment logic*
1 – 32	GPS PRN
33 – 37	Reserved (GPS)
38 – 69	GLONASS ID number plus 37
70 – 74	Reserved (GLONASS)
75 – 110	Galileo space vehicle identifier plus 74
111	Reserved (Galileo)
112 – 119	Spare
120 – 158	GEO SBAS PRN

Satellite slot number	*Assignment logic*
159 – 195	BDS ranging code number plus 158
196 – 207	Reserved
208 – 214	Spare

Note 1.— An SBAS may augment different sets of satellites for the provision of L1 SBAS service and for the provision of DFMC SBAS service.

Note 2.— Reserved means that the slot number has not yet been assigned but is planned for assignment to a specific satellite constellation.

SBAS augmented satellite signals: the DFMC SBAS standards shall allow the augmentation of the ionosphere-free combination of the following signal per core constellation:

a) for GPS: the GPS L1 C/A signal (as described in Chapter 3, 3.7.3.1.1.8 and 3.1.1.1.1) and the GPS L5-Q signal (as described in Chapter 3, 3.7.3.1.8 and 3.1.1.1.4). The LNAV data on GPS L1C/A shall be used in DFMC SBAS position solution;

b) for GLONASS: the GLONASS L1 OC signal (as described in Chapter 3, 3.7.3.1.2.10 and 3.1.2.1.5) and the GLONASS L3 OC signal (as described in Chapter 3, 3.7.3.1.2.9 and 3.1.2.1.5). The data on GLONASS L1 OC shall be used in DFMC SBAS position solution;

c) for Galileo: the Galileo E1-C signal (as described in Chapter 3, 3.7.3.1.3.11 and 3.1.3.1.1.2) and the Galileo E5a-Q signal (as described in Chapter 3, 3.7.3.1.3.11 and 3.1.3.1.1.3). The FNAV data on Galileo E5a-I shall be used in DFMC SBAS position solution;

d) for BDS: the BDS B1C signal (as described in Chapter 3, 3.7.3.1.4.9 and 3.1.4.1.1.3) and the BDS B2a signal (as described in Chapter 3, 3.7.3.1.4.10 and 3.1.4.1.1.4). The B-CNAV2 data on BDS B2a shall be used in DFMC SBAS position solution; and

e) for SBAS: the SBAS L1 signal (as described in 3.5.2) and SBAS L5 signal (as described in 3.5.9). The data broadcast on SBAS L5 shall be used in DFMC SBAS position solution.

Satellite slot value: binary indication per satellite slot to indicate whether correction and integrity data are provided for the satellite.

Coding: 0 = data not provided
1 = data provided

Augmented slot index: a number in the sequence of the satellite slot values set to "1" (1 up to 92) in the SBAS satellite mask.

Note.— The augmented slot index is "1" for the lowest satellite slot number for which the satellite slot value is "1".

Issue of data mask (IODM): an indicator provided in Types 31, 34, 35 and 36 messages that links the integrity data provided in Types 34, 35 and 36 messages with the augmented slot indexes in the Type 31 message with the same IODM.

3.5.11.2 *Satellite clock-ephemeris corrections and covariance matrix parameters*. The clock-ephemeris corrections and covariance matrix function parameters shall be as follows:

Satellite slot number: see 3.5.11.1.

Issue of data navigation (IODN): a 10-bit indicator broadcast in Type 32 messages that associates the clock and ephemeris corrections of a satellite with the ephemeris data broadcast by that satellite. The IODN for a given satellite matches with the following information (IODs) broadcast by the same satellite:

a) for GPS: IODC parameter (3.1.1.1.3.1.4) in the L1 LNAV message;

b) for GLONASS: t_b parameter (3.1.2.1.3.1) in strings Type 10, 31, 32 of L1OC navigation message;

c) for Galileo: IOD parameter (3.1.3.1.3.7) in the F/NAV message;

d) for BDS: IODC parameter (3.1.4.1.3.2.4.2) in the B-CNAV2 message; and

e) for SBAS: IODG parameter (3.5.11.5) in the Type 39/40 messages.

Orbit and clock parameters corrections: The orbit parameters shall be defined as follows:

$\delta x_{(ECEF)}$: ephemeris correction for the X-axis in WGS84 ECEF coordinates;

$\delta y_{(ECEF)}$: ephemeris correction for the Y-axis in WGS84 ECEF coordinates;

$\delta z_{(ECEF)}$: ephemeris correction for the Z-axis in WGS84 ECEF coordinates;

$\delta B_{(ECEF)}$: clock offset error correction expressed in metres;

$\delta \dot{x}_{(ECEF)}$: ephemeris velocity correction for the X-axis in WGS84 ECEF coordinates;

$\delta \dot{y}_{(ECEF)}$: ephemeris velocity correction for the Y-axis in WGS84 ECEF coordinates;

$\delta \dot{z}_{(ECEF)}$: ephemeris velocity correction for the Z-axis in WGS84 ECEF coordinates;

$\delta \dot{B}_{(ECEF)}$: clock drift error correction expressed in metres per second; and

t_D: time of applicability of the parameters δx, δy, δz, δB, $\delta \dot{x}$, $\delta \dot{y}$, $\delta \dot{z}$ and $\delta \dot{B}$ expressed in seconds of the day (see Attachment D, 6.7.11).

Scale exponent: a term to compute the scale factor used to code the Cholesky factorization elements.

Cholesky factorization elements (Ei,j): elements of an upper triangle matrix which compresses the information in the clock and ephemeris covariance matrix. These elements are used to compute the user location factor (δ_{DFRE}) as a function of user position (see 3.5.12.4.1).

Dual-frequency range error indicator (DFREI): a 4-bit indicator of the dual-frequency range error (DFRE) value, with range from 0 to 15, with value 15 corresponding to "Do Not Use for SBAS".

Note 1.— For other values (from 0 to 14), the table defining the correspondence between the DFREI values and the standard deviation (σ_{DFRE}, in metres) is given in 3.5.11.4.

Note 2.— The broadcast standard deviation values (within the allowed ranges as defined in 3.5.11.4) are SBAS-dependent.

δR_{CORR}: the first order degradation parameter multiplier.

Note.— All parameters are broadcast in the Type 32 message.

3.5.11.3 Integrity message parameters. The integrity message parameters shall consist of:

Dual-frequency range error change indicator (DFRECI): a 2-bit indicator that denotes the integrity status of a specific satellite identified by its augmented slot index (see 3.5.11.1), as specified in Table B-100.

Table B-100. DFRECI indicator

DFRECI	*State*
0 (“00”)	Unchanged DFREI
1 (“01”)	Changed DFREI
2 (“10”)	Active DFREI value increased by one
3 (“11”)	Do not use this satellite in SBAS mode
Note.— For a given satellite, the DFRECI indication “00”, and “10” always refers to the last valid DFREI received (active DFREI) for that satellite. An active DFREI could be any broadcast DFREI that has not yet timed out. DFRECI “10” indications are not cumulative.	

Issue of data mask (IODM): see 3.5.11.1.

Dual-frequency range error indicator (DFREI): see 3.5.11.2.

Note.— Parameters are broadcast using one or more the following message types:

a) Type 34 message providing DFRECI for all augmented satellites, DRFEI for up to 7 augmented satellites and IODM; and

b) Types 35 and 36 messages broadcasting IODM and DFREIs for a maximum set of 53 and 39 augmented satellites, respectively.

3.5.11.4 *Degradation parameters and DFREI scale table parameters*. The old but active data (OBAD) parameters and DFREI scale table parameters shall be as follows:

Common OBAD parameters: a set of parameters common to all augmented satellites where

$(I_{VALID})_{32}$ is the Type 32 message validity interval;

$(I_{VALID})_{39/40}$ is the Types 39 and 40 messages validity interval;

C_{ER} is the step degradation parameter for en-route through non-precision approach applications;

$C_{COVARIANCE}$ is the clock-ephemeris covariance degradation parameter; and

Degradation equation selector indicates how the degradation terms combine for the dual-frequency residual error model variance.

Coding: 0 = δ_{DFRE} only multiplies σ_{DFRE}, correction residuals are root-sum squared
1 = δ_{DFRE} multiplies the linear sum of σ_{DFRE} and the degradation parameters

Specific OBAD parameter: a set of parameters linked to a given core constellation used to account for the degradation of corrections that are old but still valid, where:

I_{CORR} is the time interval for application of C_{CORR};

C_{CORR} is the step degradation parameter for precision approach applications; and

R_{CORR} is the first order degradation parameter.

Time reference identifier: a parameter that specifies the GNSS constellation on which the SNT for DFMC SBAS is aligned, where

"0" is GPS;
"1" is GLONASS;
"2" is Galileo;
"3" is BDS;
"4" is reserved; and
"5", "6" and "7" are spare.

DFREI scale table: provides the mapping between the DFREI parameter (see 3.5.11.2) and σ_{DFRE} as specified in Table B-101.

σ_{DFRE} is the standard deviation of the residual ionosphere-free clock and ephemeris range error following the application of the DFMC SBAS clock and ephemeris corrections (Type 32 message) or of the SBAS satellite clock and ephemeris (Type 39/40 message).

Table B-101. Evaluation of σ_{DFRE} in metres

Field $value_{dec}$	0	1	2	3	4	5	6	7	8	9	10	11	12	13	14	15
Field $value_{bin}$	0000	0001	0010	0011	0100	0101	0110	0111	1000	1001	1010	1011	1100	1101	1110	1111
σ_{DFRE}: DFREI=0	0.125	0.1875	0.25	0.3125	0.375	0.4375	0.5	0.5625	0.625	0.6875	0.75	0.8125	0.875	0.9375	1	1.0625
σ_{DFRE}: DFREI=1	0.25	0.375	0.5	0.625	0.75	0.875	1.0	1.125	1.25	1.375	1.5	1.625	1.75	1.875	2.0	2.125
σ_{DFRE}: DFREI=2	0.375	0.5	0.625	0.75	0.875	1.0	1.125	1.25	1.375	1.5	1.625	1.75	1.875	2.0	2.125	2.25
σ_{DFRE}: DFREI=3	0.5	0.625	0.75	0.875	1.0	1.125	1.25	1.375	1.5	1.625	1.75	1.875	2.0	2.125	2.25	2.375
σ_{DFRE}: DFREI=4	0.625	0.75	0.875	1.0	1.125	1.25	1.375	1.5	1.625	1.75	1.875	2.0	2.125	2.25	2.375	2.5
σ_{DFRE}: DFREI=5	0.75	1.0	1.25	1.5	1.75	2.0	2.25	2.5	2.75	3.0	3.25	3.5	3.75	4.0	4.25	4.5
σ_{DFRE}: DFREI=6	1.0	1.25	1.5	1.75	2.0	2.25	2.5	2.75	3.0	3.25	3.5	3.75	4.0	4.25	4.5	4.75
σ_{DFRE}: DFREI=7	1.25	1.5	1.75	2	2.25	2.5	2.75	3	3.25	3.5	3.75	4	4.25	4.5	4.75	5
σ_{DFRE}: DFREI=8	1.5	1.75	2.0	2.25	2.5	2.75	3.0	3.25	3.5	3.75	4.0	4.25	4.5	4.75	5.0	5.25
σ_{DFRE}: DFREI=9	1.75	2.0	2.25	2.5	2.75	3.0	3.25	3.5	3.75	4.0	4.25	4.5	4.75	5.0	5.25	5.5
σ_{DFRE}: DFREI=10	2.0	2.5	3.0	3.5	4.0	4.5	5.0	5.5	6.0	6.5	7.0	7.5	8.0	8.5	9.0	9.5
σ_{DFRE}: DFREI=11	2.5	3.0	3.5	4.0	4.5	5.0	5.5	6.0	6.5	7.0	7.5	8.0	8.5	9.0	9.5	10.0
σ_{DFRE}: DFREI=12	3.0	4.0	5.0	6.0	7.0	8.0	9.0	10.0	11.0	12.0	13.0	14.0	15.0	16.0	17.0	18.0
σ_{DFRE}: DFREI=13	4.0	7.0	10.0	13.0	16.0	19.0	22.0	25.0	28.0	31.0	34.0	37.0	40.0	43.0	46.0	49.0
σ_{DFRE}: DFREI=14	10.0	16.0	22.0	28.0	34.0	40.0	46.0	52.0	58.0	64.0	70.0	76.0	82.0	88.0	94.0	100.0
σ_{DFRE}: DFREI=15	DO NOT USE THIS SATELLITE IN SBAS MODE															

Note.— All parameters are broadcast in the Type 37 message.

3.5.11.5 *SBAS satellite clock, ephemeris and covariance matrix parameters*. The broadcasting SBAS satellite clock, ephemeris and covariance data shall be as follows:

Issue of data GEO (IODG): an issue of data indicator that links Type 39 and 40 messages.

Note.— Each message of a paired Type 39/40 message set contains the same 2-bit IODG.

SBAS service provider ID: identifies the SBAS service provider responsible for the signal broadcast by the SBAS satellite, as defined in Table B-65.

Keplerian parameters: the ephemeris information to determine the ionosphere-free dual-frequency L1/L5 antenna phase centre location is:

C_{uc} is the amplitude of cosine harmonic correction terms to the argument of latitude;
C_{us} is the amplitude of sine harmonic correction terms to the argument of latitude;
I_{dot} is the rate of inclination angle;
a is the semi-major axis;
ω is the argument of perigee;
Ω_0 is longitude of ascending node of orbital plane at t_e;
M_0 is the mean anomaly at t_e;
I is the inclination at t_e; and
e is the eccentricity;

Satellite slot delta: identifies the broadcasting SBAS satellite in Table B-102.

Note.— A satellite slot delta of 0 is used in the Type 47 message to indicate that no almanac data follows.

Table B-102. Satellite slot delta assignments

Satellite slot delta	*Assignment logic*
0	No SBAS satellite (coding only used in Type 47 messages)
1 – 39	SBAS GEO satellite PRNs 120-158
40 – 63	Spare

SBAS ephemeris time t_e: time of applicability of the ephemeris message in seconds of day;

clock parameters: provided for ionosphere-free position as follows:

a_{Gf0}: clock offset; and
a_{Gf1}: clock rate;

scale exponent: see 3.5.11.2;

covariance matrix: see 3.5.11.2;

dual-frequency range error indicator (DFREI): see 3.5.11.2; and

δ_{RCORR}: see 3.5.11.2.

Note.— All parameters are broadcast in combined Type 39 and Type 40 messages.

3.5.11.6 *GNSS time offsets parameters*. The GNSS time parameters shall be as follows:

The common UTC parameters are:

A_{1SNT}: drift coefficient of the SNT scale for DFMC SBAS relative to UTC;
A_{0SNT}: bias coefficient of the SNT scale for DFMC SBAS relative to UTC time scale;
t_{0t}: time data reference time of week;
WN_t: data reference week number;
Δt_{LS}: current or past leap second count;
WN_{LSF}: leap second reference week number;
DN: leap second reference day number;
Δt_{LSF}: current or future leap second count; and
UTC standard identifier (defined in 3.5.4.8).

The validity model parameters of the SNT-to-UTC offset model are:

TOW_{app}: start time in time of week of the validity period of the information broadcast in the common UTC parameter field;

WN_{app}: week number associated to the TOW_{app} defining the validity period of the information broadcast in the common UTC parameter field. WN_{app} set to 0 means that the $WN_{app} = WN_t$-1. WNapp set to 1 means that the $WN_{app}=WN_t$;

VP: identifies the validity period (time-out) duration according to Table B-104 for the common UTC information; and

UTC offset status: SNT-to-UTC offset validity status defined according to Table B-103.

Table B–103. UTC offset status parameter

UTC offset status	*State*
0	Previously received common UTC information remains valid, no change in validity period.
1	Previously received common UTC information is no longer valid and shall no longer be used.

Table B–104. VP parameter

VP	*VP duration*	*VP*	*VP duration*
0 (“000”)	1 day from broadcast	4 (“100”)	6 hours
1 (“001”)	1 hour	5 (“101”)	9 hours
2 (“010”)	2 hours	6 (“110”)	12 hours
3 (“011”)	4 hours	7 (“111”)	24 hours

The time-out for the SNT-to-UTC offset information (noted TO42 below) shall be defined as follows:

a) if VP is set to 0: TO_{42} = Type 42 message received time + 86 400 s;

b) if VP is set to a value different from 0: TO_{42} = start time in seconds (defined by TOW_{app} and WN_{app}) + (VP duration) × 3 600.

Note 1.— All parameters are broadcast in a Type 42 message.

Note 2.— It is not intended that Type 42 messages be used for positioning services with integrity, as no integrity budget is defined in SBAS system for the time offset parameters.

3.5.11.7 *SBAS satellite parameters*. The SBAS satellite parameters shall be as follows:

satellite slot delta: see 3.5.11.5;

SBAS service provider ID: see 3.5.11.5;

broadcast indicator: when set to 1, it identifies the almanac data of the broadcasting satellite. It shall be set to 0 otherwise;

almanac parameters: broadcast using Keplerian parameters, where:

a is the semi-major axis;

e is the eccentricity;

I is the inclination;

ω is the argument of perigee;

Ω_0 is the longitude of ascending node of orbital plane at beginning of week;

$\dot{\Omega}$ is the rate of right ascension of the ascending node;

M_0 is the mean anomaly at t_a; and

t_a is SBAS almanac time (the almanac reference epoch in seconds of day);

week number rollover count ($WNRO_{count}$): the number of week number rollovers already elapsed for the GNSS constellation identified by the time reference identifier at the almanac reference time, t_a, broadcast in the SBAS I Keplerian parameters block of the Type 47 message (see Table B-102). $WNRO_{count}$ value of 15 shall be used to indicate that the parameter is not valid and will be updated. The starting time per constellation with respect to UTC shall be:

a) for GPS: midnight between 5 January 1980 and 6 January 1980 (see 3.1.1.4);

b) for GLONASS: midnight between 31 December 1995 and 1 January 1996 (see 3.1.2.4);

c) for Galileo: 13 seconds before midnight between 21 August 1999 and 22 August 1999 (see 3.1.3.4); and

d) for BDS: midnight between 31 December 2005 and 1 January 2006 (see 3.1.4.4).

Note 1.— All parameters are broadcast in a Type 47 message.

Note 2.— The Type 47 message provides the capacity to transmit the SBAS almanacs parameters of 2 SBAS satellites.

3.5.12 DEFINITIONS OF PROTOCOLS FOR DFMC SBAS DATA APPLICATIONS

Note.— This section provides the definitions of parameters used by SBAS (non-aircraft and aircraft elements) that are needed to compute the navigation solution and associated integrity (protection levels).

3.5.12.1 General information for DFMC SBAS data protocol

The conventional values to be used for the computation of the earth-fixed coordinates of the SBAS space vehicle antenna phase centre shall be:

$\pi = 3.1415926535898$ (ratio of a circle's circumference to its diameter);

$\mu = 3.986005 \times 10^{14}$ m^3/s^2 (earth's gravitational parameter);

$\dot{\Omega}_e = 7.2921151467 \times 10^{-5}$ rad/s (earth's rotation rate); and

$c = 299\,792\,458$ m/s (speed of light in a vacuum).

Note.— The values of these parameters are not broadcast by SBAS but use of the correct values is necessary to ensure interoperability between different SBAS implementations.

When computing a time difference ($t-t_0$) where the reference time t_0 is expressed in the SNT (such as t_D broadcast in Type 32 message, t_e broadcast in Type 40, t_a broadcast in Type 47 message), the time t used in 3.5.12 shall be expressed in the same time frame considering the conversion elements in Table B-105.

Table B-105. Conversion from a core constellation reference time to the SNT

		"0"	*"1"*	*"2"*	*"3"*
Core constellation reference time	GPS	$t^{(SNT=0)} = t^{(GPST)}$	$t^{(SNT=1)} = t^{(GPST)} - \Delta tLS + 10\,800\ s$	$t^{(SNT=2)} = t^{(GPST)}$	$t^{(SNT=3)} = t^{(GPST)} - 14\ s$
	GLONASS	$t^{(SNT=0)} = t^{(GLONASST)} + \Delta tLS - 10\,800\ s$	$t^{(SNT=1)} = t^{(GLONASST)}$	$t^{(SNT=2)} = t^{(GLONASST)} + \Delta tLS - 10\,800\ s$	$t^{(SNT=3)} = t^{(GLONASST)} + \Delta tLS - 10\,800\ s$
	Galileo	$t^{(SNT=0)} = t^{(GST)}$	$t^{(SNT=1)} = t^{(GST)} - \Delta tLS + 10\,800\ s$	$t^{(SNT=2)} = t^{(GST)}$	$t^{(SNT=3)} = t^{(GST)} - 14\ s$
	BDS	$t^{(SNT=0)} = t^{(BDT)} + 14\ s$	$t^{(SNT=1)} = t^{(BDT)} - \Delta tLS + 10\,800\ s$	$t^{(SNT=2)} = t^{(BDT)} + 14\ s$	$t^{(SNT=3)} = t^{(BDT)}$

Note 1.— ΔtLS is computed through core constellation information.

Note 2.— Table B-105 describes how to convert a time of day $t^{(GNSST)}$ expressed in one of the GNSS core constellation reference times into time of day $t^{(SNT=i)}$ expressed in the SNT specified by the time referenceidentifier i.

3.5.12.2 Determination of SBAS satellite position based on its almanac.

The following parameters described in 3.5.11.7 shall be used in the computation of the SBAS satellite position based on its almanac:

t_a: SBAS almanac time (the reference epoch of the almanac (s) as a time of day);

a: semi-major axis (m);

e: eccentricity (dimensionless);

M_0: mean anomaly (rad) at ta;

ω: argument of perigee (rad);

I: inclination angle (rad);

Ω_0: longitude of ascending node of orbital plane at beginning of week (rad); and

$\dot{\Omega}$: rate of right ascension of the ascending node (rad/s).

The computation of the SBAS satellite position shall be made for the epoch t, expressed in the SNT frame for DFMC SBAS. The "almanac reference epoch" shall be broadcast as a time of day through t_a. The SBAS users shall account for the truncated nature of the t_a parameter.

3.5.12.2.1 Computation of the mean anomaly (M_t)

The mean anomaly (M_t) at the epoch t shall be computed as:

$$M_t = M_0 + n_0 \Delta_t$$

where

$$n_0 = \sqrt{\frac{\mu}{a^3}}$$

$$\Delta_t = t - t_a.$$

Note.— The SBAS user needs to ensure that t and t_a have the same time reference when computing Δt. Since the broadcast parameter t_a is a time of day, conversion is needed to account for day or week changes.

3.5.12.2.2 Computation of the eccentric anomaly (E_t)

The eccentric anomaly (E_t) for epoch t shall be computed solving the equation:

$$M_t = E_t - e \sin(E_t)$$

Note.— This equation may be solved by iteration.

3.5.12.2.3 Computation of the argument of latitude (Φ_t)

The argument of latitude (Φ_t) for epoch t shall be computed as:

$$\phi_t = v_t + \omega$$

where v_t is the true anomaly at epoch t:

$$v_t = 2 \times \text{atan}\left(\sqrt{\frac{1+e}{1-e}}\, tan(\frac{E_t}{2})\right)$$

3.5.12.2.4 Computation of the coordinates in the orbital plane (x'_t; y'_t)

The coordinates in the orbital plane (x'_t; y'_t) for epoch t shall be computed as:

$$x'_t = r_t \cos\phi_t$$
$$y'_t = r_t sin\phi_t$$

where r_t is the orbit radius at epoch t:

$$r_t = a \times [1 - (e \times \cos E_t)]$$

3.5.12.2.5 Computation of the space vehicle fixed earth's coordinates (x_t; y_t; z_t)

The space vehicle fixed earth's coordinates (x_t; y_t; z_t) for epoch t shall be computed as:

$$x_t = (x'_t \cos \Omega_t) - (y'_t \cos I \sin \Omega_t)$$
$$y_t = (x'_t \sin \Omega_t) - (y'_t \cos I \cos \Omega_t)$$
$$z_t = y'_t \sin I$$

where Ω_t is the corrected longitude of the ascending node at epoch t:

$$\Omega_t = \Omega_0 + \left[(\dot{\Omega} - \dot{\Omega}_e)\Delta_t\right] - (\dot{\Omega}_e t_{aTOW})$$

and t_{aTOW} is t_a expressed in seconds as a time of week (or elapsed time since the beginning of the almanac week).

3.5.12.3 Determination of SBAS satellite position based on its ephemeris

The following parameters, described in 3.5.11.5, shall be used in the computation of the SBAS satellite position based on its ephemeris:

t_e: SBAS ephemeris time (the reference epoch of the ephemeris (s) as a time of day);
a: semi-major axis (m);
e: eccentricity (dimensionless);
M_0: mean anomaly (rad) at t_e;
ω: argument of perigee (rad);
I: inclination angle at t_e (rad);
I_{dot}: rate of inclination angle (rad/s);
Ω_0: longitude of the ascending node of orbital plane at t_e (rad);
C_{uc}: amplitude of the cosine harmonic correction to the argument of latitude (rad); and
C_{us}: amplitude of the sine harmonic correction to the argument of latitude (rad).

The computation of the SBAS satellite position shall be made for the epoch t, expressed in the SNT frame for DFMC SBAS. The "ephemeris reference epoch" shall be broadcast as a time of day through t_e. The SBAS users shall account for the truncated nature of the t_e parameter.

3.5.12.3.1 Computation of the mean anomaly (M_t)

The mean anomaly (M_t) at the epoch t shall be computed as:

$$M_t = M_0 + n_0 \Delta_t$$

where

$$n_0 = \sqrt{\frac{\mu}{a^3}}$$

$$\Delta_t = t - t_e$$

Note.— The SBAS user needs to ensure that t and t_e have the same time reference when computing Δt. Since the broadcast parameter t_e is a time of day, a conversion is needed to account for day or week changes.

3.5.12.3.2 Computation of the eccentric anomaly (E_t)

The eccentric anomaly (E_t) for epoch t shall be computed solving the equation:

$$M_t = E_t - e\sin(E_t)$$

Note.— This equation may be solved by iteration.

3.5.12.3.3 Computation of the argument of latitude (Φ_t)

The eccentric anomaly (Φ_t) for epoch t shall be computed as:

$$\phi_t = v_t + \omega$$

where v_t is the true anomaly at epoch t:

$$v_t = 2 \times \operatorname{atan}\left(\sqrt{\frac{1+e}{1-e}}\, tan(\frac{E_t}{2})\right)$$

3.5.12.3.4 Computation of the corrected argument of latitude (u_t)

The corrected argument of latitude (u_t) for epoch t shall be computed as:

$$u_t = \phi_t + \delta u_t$$

where δu_t is the argument of latitude second harmonic perturbation at epoch t:

$$\delta u_t = [C_{us}\sin(2\phi_t)] + [C_{us}\cos(2\phi_t)]$$

3.5.12.3.5 Computation of the coordinates in the orbital plane ($x'_t;\ y'_t$)

The coordinates in the orbital plane ($x'_t;\ y'_t$) for epoch t shall be computed as:

$$x'_t = r_t\cos u_t$$
$$y'_t = r_t\sin u_t$$

where r_t is the orbit radius at epoch t:

$$r_t = a[1-(e\cos E_t)]$$

3.5.12.3.6 Computation of the space vehicle fixed earth's coordinates ($x_t; y_t; z_t$)

The space vehicle fixed earth's coordinates ($x_t; y_t; z_t$) for epoch t shall be computed as:

$$x_t = (x'_t\cos\Omega_t) - (y'_t\cos i_t\sin\Omega_t)$$
$$y_t = (x'_t\sin\Omega_t) + (y'_t\cos i_t\cos\Omega_t)$$
$$z_t = y'_t\sin i_t$$

where Ω_t is the corrected longitude of the ascending node at epoch t:

$$\Omega_t = \Omega_0 - (\dot{\Omega}_e\Delta_t)$$

and i_t is the corrected inclination for epoch t:

$$i_t = I + (I_{dot}\Delta_t)$$

Note 1.— The Sagnac correction (earth's rotation) needs to be taken into account.

Note 2.— The rate of right ascension of the ascending node is assumed to be zero.

3.5.12.4 SBAS DFMC navigation solution

Note.— 3.5.12.4 provides formulas for the SBAS DFMC navigation solution of an SBAS system augmenting two core constellations, Constellation 1 (C1) and Constellation 2 (C2). When the number N of constellations being augmented is different from 2 (N=1, 3 or 4), the size of G and of X will need to vary accordingly. Additional information is available in Attachment D, 6.7.12.

The weighted least square navigation solution takes the following form:

$$\hat{X} = (G^T \cdot W \cdot G)^{-1} \cdot G^T \cdot W \cdot Y$$

where

a) $\hat{X}$ is the weighted least square estimate of the error in the estimated location of the user about which the linearization has been made:

$$X = [x, y, z, ct_{C1}, ct_{C1\text{-}C2}]$$

where

t_{C1} is the clock bias of the receiver in seconds with respect to Constellation 1 reference time; and

$t_{C1\text{-}C2}$ is the time difference observed by the receiver in seconds between the reference constellation 2 and the constellation 1, namely $t_{C1\text{-}C2} = t_{C2} - t_{C1}$;

Note.— This is one possible implementation. A second implementation is described in Attachment D, 6.7.12.

b) Y is the P-dimensional vector containing the corrected ionosphere-free pseudo-range measurements $PR_{i,corrected}$, minus the expected ranging values based on the location of the satellites and the estimated location of the user (X), where

P is the number of satellites used in the navigation solution;

$PR_{i,corrected}$ is the corrected ionosphere-free pseudo-range measurement for the satellite i computed as specified in 3.5.1.2 with the parameters as follows:

b_i, defined in 3.5.1.2, is SBAS corrected clock:

$$b_i = c * (\delta\Delta t_{SV,i} + \Delta t_{SV,i});$$

$\delta\Delta t_{SV,i}$ is the time error estimate at time t computed with the parameters described in 3.5.11.2 as follows:

$$c * \delta\Delta t_{SV,i} = \delta B + \delta\dot{B}(t - t_D);$$

$\Delta t_{SV,i}$ is the satellite time correction described in 3.5.15.1.1.2; and

t_D is the reference time of the corrections.

The satellite position error correction vector [δx(t), δy(t), δz(t)] shall be expressed in the WGS-84 ECEF coordinate frame as follows and shall be added to the satellite coordinate vector [x(t), y(t), z(t)]:

$$\begin{bmatrix} \delta x(t) \\ \delta y(t) \\ \delta z(t) \end{bmatrix} = \begin{bmatrix} \delta x \\ \delta y \\ \delta z \end{bmatrix} + \begin{bmatrix} \delta \dot{x} \\ \delta \dot{y} \\ \delta \dot{z} \end{bmatrix} (t - t_D)$$

with δx, δy, δz, $\delta \dot{x}$ $\delta \dot{y}$ and $\delta \dot{z}$ defined in 3.5.11.2.

Note 1.— The SBAS user needs to ensure that t and t_D have the same time reference when computing t-t_D. Since the broadcast parameter t_D is a time of day, a conversion is needed to account for day or week changes.

Note 2. — In case of SBAS ranging, for the SBAS ionosphere-free measurements of the SBAS providing the correction and integrity information, the time error estimate $\delta \Delta t_{SV}$ is zero as there is no correction provided for this satellite.

c) G is the observation matrix:

$$\mathrm{G_i} = [-\mathrm{cosEI_i} \cdot \mathrm{sinAz_i} - \mathrm{cosEI_i} \cdot \mathrm{cosAz_i} - \mathrm{sinEI_i} \;\; 1 \;\; \mathrm{n_i}] \; = \mathrm{i^{th}row\ of\ G}$$

where

El_i is the elevation for satellite i after correction of its position using the parameters described in 3.5.11.2;

Az_i is the azimuth for satellite i after correction of its position using the parameters transmitted described in 3.5.11.2. The positive azimuth is defined clockwise from North; and

n_i is "1" if satellite is part of reference constellation C2 or "0" if it is part of C1.

For SBAS ranging satellite: n_i is "0" if C1 is GPS and n_i is "1" if C2 is GPS.

Note 1.— The DFMC SBAS standards have no provisions for the augmentation of DFMC SBAS ranging signals from other service providers.

Note 2.— If SBAS ranging is provided by the SBAS and if the SBAS is not augmenting GPS, the SBAS range time offset needs to be solved by introducing an additional unknown in the observation matrix as explained in Attachment D, 6.7.12.1.

d) W is the weighting matrix:

$$\mathrm{W} = \begin{bmatrix} \mathrm{w_1} & 0 & \cdots & 0 \\ 0 & \mathrm{w_2} & \cdots & 0 \\ \vdots & \vdots & \ddots & \vdots \\ 0 & 0 & \cdots & \mathrm{w_o} \end{bmatrix}$$

where

$$\mathrm{w_i} = 1/\sigma_i^2;$$

$$\sigma_i^2 = \sigma_{i,\mathrm{DFC}}^2 + \sigma_{i,\mathrm{tropo}}^2 + \sigma_{i,\mathrm{air\_DF}}^2 + \sigma_{i,\mathrm{iono}}^2;$$

$\sigma_{i,\mathrm{DFC}}^2$ is the model variance for the residual error associated to SBAS corrections for satellite i, as defined in 3.5.12.4.1;

$\sigma^2_{i,tropo}$ is the model variance for the troposphere residual error for satellite i, as defined in 3.5.8.4.2.4 and 3.5.8.4.2.5;

σ^2_{i,air_DF} is the model variation for the combined measurement noise and multipath residual errors applicable to the ionosphere-free combination of dual-frequency range measurements (see 3.5.15.3.4.1) for satellite i; and

$\sigma^2_{i,iono}$ is the model variance for the ionosphere-free residual error for satellite i, as defined in 3.5.15.3.4.2.

3.5.12.4.1 Computation of the model variance for the residual error associated to SBAS corrections σ^2_{DFC}.

Note.— The following calculations are done for each satellite. For convenience, the index i used in 3.5.12.4 was removed from the equations.

The user location factor (δ_{DFRE}) shall be obtained via the clock-ephemeris covariance matrix C as follows:

$$C=R^TR$$

where

$$R = 2^{(\text{scale exponent}-5)} = \begin{bmatrix} E_{1,1} & E_{1,2} & E_{1,3} & E_{1,4} \\ 0 & E_{2,2} & E_{2,3} & E_{2,4} \\ 0 & 0 & E_{3,3} & E_{3,4} \\ 0 & 0 & 0 & E_{4,4} \end{bmatrix}$$

then

$$\delta_{DFRE} = \sqrt{I^TCI} + \varepsilon_C$$

where

I is the 4-D line of sight vector from the user to the satellite in the WGS-84 coordinate frame where the first three components are the unit vector from the user to the satellite and the fourth component is 1;

ε_C is derived from $C_{COVARIANCE}$ (defined in 3.5.11.4) as:

$$\varepsilon_C = C_{COVARIANCE} \times 2^{\text{scale exponent}-5}; \text{ and}$$

scale exponent is defined in 3.5.11.2 and is transmitted through Type 32 messages for core constellation satellites and Type 40 messages for SBAS satellites.

The model variance for the residual error associated to SBAS corrections (σ^2_{DFC}) at the time t shall be computed using the SBAS corrections parameters described in 3.5.11.2 (for core constellations satellites) and 3.5.11.5 (for SBAS satellite) associated to the OBAD parameters described in 3.5.11.4 based on the broadcast degradation equation selector as follows:

$$\text{“0”: } \sigma^2_{DFC} = \sigma^2_{DFRE} \times \delta^2_{DFRE} + \varepsilon^2_{CORR} + \varepsilon^2_{ER}$$
$$\text{“1”: } \sigma^2_{DFC} = (\sigma^2_{DFRE} + \varepsilon_{CORR} + \varepsilon_{ER})^2 \times \delta^2_{DFRE}$$

where

$$\varepsilon_{corr} = \left[\frac{t - t_{CORR}}{I_{CORR}}\right] C_{CORR} + (t - t_{CORR}) \frac{(R_{CORR})_{sv}}{1000};$$

σ_{DFRE} is the standard deviation of the residual ionosphere-free clock and ephemeris range error as defined in 3.5.11.4;

ε_{CORR} is the degradation parameter for corrections;

ε_{er} is the degradation parameter for en-route through non-precision approach applications. It shall be equal to 0 if the corrections have not timed out for approach applications (APV-I or Category I). It shall be equal to C_{er} (see 3.5.11.4) if any of the corrections or the DFREI/DFRECI (i.e. information broadcast in a valid Types 32, 34, 35, 36, 39 and 40 messages) have timed out for approach application but are still valid for en-route through non-precision approach applications;

t_{CORR} is the time of applicability (the start of the epoch of the SNT second that is coincident with the transmission by SBAS of the first bit of the message block) of the latest satellite or SBAS clock-ephemeris correction information received mapping with the satellite ephemeris;

I_{CORR} is the time interval for application of C_{CORR} (see 3.5.11.4);

C_{CORR} is the step degradation parameter for precision approach applications (see 3.5.11.4);

$(R_{CORR})_{SV}$ is the satellite specific degradation factor computed from $RCORR$ (see 3.5.11.4) and δR_{CORR} as in 3.5.11.2 (for the augmented satellites) or in 3.5.11.5 (for SBAS):

$$\text{if } t - t_{CORR} \leq I_{CORR}, \text{ then } (R_{CORR})_{SV} = R_{CORR} \times \delta R_{CORR}$$

$$\text{if } t - t_{CORR} > I_{CORR}, \text{ then } (R_{CORR})_{SV} = R_{CORR}; \text{ and}$$

$\lfloor x \rfloor$ is the greatest integer less than or equal to x.

3.5.12.5 Protection level calculation

For a general least-squares position solution, the projection matrix S shall be defined as:

$$S = \begin{bmatrix} s_{east,1} & s_{east,2} & \cdots & s_{east,P} \\ s_{north,1} & s_{north,2} & \cdots & s_{north,P} \\ s_{U,1} & s_{U,2} & \cdots & s_{U,P} \\ s_{t_{C_1},1} & s_{t_{C_1},2} & \cdots & s_{t_{C_1},P} \\ s_{t_{C_1C_2},1} & s_{t_{C_1C_2},2} & \cdots & s_{t_{C_1C_2},P} \end{bmatrix} = (G^T \cdot W \cdot G)^{-1} \cdot G^T \cdot W$$

where

G is the observation matrix defined in 3.5.12.4; and

W is the weighting matrix defined in 3.5.12.4.

3.5.12.5.1 Horizontal protection level (HPL)

The horizontal protection level (HPL) shall be computed as follows:

$$HPL = K_H d_{major}$$

where

$$K_H = \begin{cases} 6.18 \text{ for en route through non precision approach operations} \\ 6.0 \text{ for APV} - \text{I and Category I operations} \end{cases};$$

d_{major} is the error uncertainty along the semi-major axis of the error ellipse defined as

$$d_{major} = \sqrt{\frac{d_{east}^2 + d_{north}^2}{2}} + \sqrt{\left(\frac{d_{east}^2 - d_{north}^2}{2}\right)^2 + d_{EN}^2};$$

where

d_{east}^2 is the variance of model distribution that overbounds the true error distribution in the east axis:

$$d_{east}^2 = \sum_{i=1}^{P} s_{east,i}^2 \sigma_i^2;$$

d_{north}^2 is the variance of model distribution that overbounds the true error distribution in the north axis:

$$d_{north}^2 = \sum_{i=1}^{P} s_{north,i}^2 \sigma_i^2;$$

d_{EN} is the covariance of model distribution in the east and north axis:

$$d_{EN} = \sum_{i=1}^{P} s_{east,i} s_{north,i} \sigma_i^2;$$

$s_{(east,i)}$ is the partial derivative of position error in the east direction with respect to the pseudo-range error on the ith satellite;

$s_{(north,i)}$ is the partial derivative of position error in the north direction with respect to the pseudo-range error on the ith satellite; and

σ_i is defined in 3.5.12.4.

3.5.12.5.2 Vertical protection level (VPL)

The vertical protection level (VPL) shall be computed as follows:

$$VPL = K_{V,PA} \times \sqrt{d_{nt,U}^2 + d_{tropo,U}^2}$$

where

$K_{V,PA}$=5.33;

$d_{nt,U}^2$ is the variance of model distribution that overbounds the non-tropospheric true error distribution in the vertical axis defined as:

$$d_{nt,U}^2 = \sum S_{U,i}^2 \sigma_{nt,i}^2$$

where

$s_{U,i}$ is the partial derivative of position error in the vertical direction with respect to the pseudo-range error on the ith satellite; and

$\sigma_{nt,i}$ is given by:

$$\sigma_{nt,i}^2 = \sigma_{i,DFC}^2 + \sigma_{i,air\_DF}^2 + \sigma_{i,iono}^2 \text{ (sigma terms defind in 3.5.12.4)}$$

$d_{trop,U}^2$ is given by

$$d_{tropo,U}^2 = \left(\sum S_{U,i}\sigma_{i,tropo}\right)^2$$

$\sigma_{i,tropo}$ is the square root of the model variance for the troposphere residual error for satellite i, as defined in 3.5.8.4.2.5;

3.5.13 DFMC SBAS MESSAGE TABLES

Each SBAS message shall be coded in accordance with the corresponding message format defined in Tables B-92 through B 104. All signed parameters in these tables shall be represented in two's complement, with the sign bit occupying the MSB.

Note 1.— The value of every parameter contained in a DFMC message is computed as follows, considering that $field_{value}$ is the decimal value of the binary number, after two's complement transformation if specified in the description column of the table:

- *if the parameter is coded as two's complement: parameter = $field_{value}$*$scale_{factor}$; and*
- *if the parameter is not coded as two's complement: parameter = offset + $field_{value}$*$scale_{factor}$, where the offset being specified in the comment column if different from the effective range minimum.*

Note 2.— Reserved bits in DFMC messages can take any value.

Table B-106. Type 0 "Do Not Use" message broadcast on L5

Section	*Name*	*Length*	*Scale factor*	*Effective range*		*Unit*	*Comment*
				min	*max*		
Reserved	Reserved	216	-	-	-	-	

Note 1.— This message is the equivalent of the L1 SBAS Type 0 message but with application for the messages broadcast on DFMC SBAS service only.

Note 2.— When this message is broadcast, it indicates that the signal does not support safety-of-life operation. SBAS may broadcast the data field of any message type in each Type 0 message.

Table B-107. Type 31 SBAS satellite mask

Section	*Name*	*Length*	*Scale factor*	*Effective range*		*Unit*	*Comment*
				min	*max*		
GPS mask	Satellite slot number 1	1	1	0	1	-	Bit for 1st GPS satellite
	to satellite slot number 32	1	1	0	1	-	to bit for 32nd GPS satellite
	Satellite slot number 33	1	1	0	1	-	GPS reserved, bit 1
	to satellite slot number 37	1	1	0	1	-	to GPS reserved, bit 5
GLONASS mask	Satellite slot number 38	1	1	0	1	-	Bit for 1st GLONASS satellite
	to satellite slot number 69	1	1	0	1	-	to bit for 32nd GLONASS satellite
	Satellite slot number 70	1	1	0	1	-	GLONASS reserved, bit 1
	to satellite slot number 74	1	1	0	1	-	to GLONASS reserved, bit 5
Galileo mask	Satellite slot number 75	1	1	0	1	-	Bit for 1st Galileo satellite
	to satellite slot number 110	1	1	0	1	-	to bit for 36th Galileo satellite
	Satellite slot number 111	1	1	0	1	-	Galileo reserved
Spare	Satellite slot number 112	1	1	0	1	-	
	to satellite slot number 119	1	1	0	1	-	
SBAS mask	Satellite slot number 120	1	1	0	1	-	Bit for 1st GEO SBAS satellite
	to satellite slot number 158	1	1	0	1	-	to bit for 39th GEO SBAS satellite
BDS mask	Satellite slot number 159	1	1	0	1	-	Bit for 1st BDS satellite
	to satellite slot number 195	1	1	0	1	-	to bit for 37th BDS satellite
Reserved	Satellite slot number 196	1	1	0	1	-	reserved, bit 1
	to satellite slot number 207	1	1	0	1	-	to reserved, bit 12
Spare	Satellite slot	1	1	0	1	-	

Section	*Name*	*Length*	*Scale factor*	*Effective range*		*Unit*	*Comment*
				min	*max*		
	number 208						
	to satellite slot number 214	1	1	0	1	-	
IOD	IODM	2	1	0	3	-	

Note.— All parameters are defined in 3.5.11.1.

Table B-108. Type 32 satellite clock-ephemeris corrections and covariance matrix

Section	*Name*	*Length*	*Scale factor*	*Effective range*		*Unit*	*Comment*
				min	*max*		
Message header	Satellite slot number	9	1	1	214	-	Offset is 0 and coding range (0 to 511) exceeds the effective range Coding of 1 corresponds to satellite slot number of 1. The effective range is defined in Table B-99
	IODN	10	1	0	1 023	-	
Orbit parameters	$\delta x_{(ECEF)}$	11	0.0625	-64	63.9375	m	Coded as two's complement
	$\delta y_{(ECEF)}$	11	0.0625	-64	63.9375	m	Coded as two's complement
	$\delta z_{(ECEF)}$	11	0.0625	-64	63.9375	m	Coded as two's complement
	$\delta B_{(ECEF)}$	12	0.03125	-64	63.96875	m	Coded as two's complement
	$\delta \dot{x}_{(ECEF)}$	8	2^{-11}	-0.0625	0.06201171875	m/s	Coded as two's complement
	$\delta \dot{y}_{(ECEF)}$	8	2^{-11}	-0.0625	0.06201171875	m/s	Coded as two's complement
	$\delta \dot{z}_{(ECEF)}$	8	2^{-11}	-0.0625	0.06201171875	m/s	Coded as two's complement
	$\delta \dot{B}_{(ECEF)}$	9	2^{-12}	-0.0625	0.062255859375	m/s	Coded as two's complement
	t_D	13	16	0	86 384	s	Coding range (0 to 131 056) exceeds the effective range
Covariance parameters	Scale exponent	3	1	0	7	-	
	$E_{1,1}$	9	1	0	511	-	
	$E_{2,2}$	9	1	0	511	-	
	$E_{3,3}$	9	1	0	511	-	
	$E_{4,4}$	9	1	0	511	-	
	$E_{1,2}$	10	1	-512	511	-	Coded as two's complement
	$E_{1,3}$	10	1	-512	511	-	Coded as two's complement
	$E_{1,4}$	10	1	-512	511	-	Coded as two's complement

Section	*Name*	*Length*	*Scale factor*	*Effective range*		*Unit*	*Comment*
				min	*max*		
	$E_{2,3}$	10	1	-512	511	-	Coded as two's complement
	$E_{2,4}$	10	1	-512	511	-	Coded as two's complement
	$E_{3,4}$	10	1	-512	511	-	Coded as two's complement
Integrity parameters	DFREI	4	1	0	15	-	
δR_{CORR}	R_{CORR} scale factor	3	1/8	1/8	1	-	

Note 1.— This message contains the correction parameters for a single satellite identified by the satellite slot parameter.

Note 2.— All parameters are defined in 3.5.11.2.

Table B-109. Type 34 integrity information message

Section	*Name*	*Length*	*Scale factor*	*Effective range*		*Unit*	*Comment*
				min	*max*		
DFRECI	DFRECI 1	2	1	0	3	-	
	to DFRECI 92	2	1	0	3	-	
DFREI	DFREI 1	4	1	0	15	-	
	to DFREI 7	4	1	0	15	-	
Reserved	Reserved	2	-	-	-	-	
IOD	IODM	2	1	0	3	-	

Note 1.— DFREI is defined in 3.5.11.2.

Note 2.— IODM is defined in 3.5.11.1.

Note 3.— DFRECI is defined in 3.5.11.3.

Note 4.— See Attachment D, 6.7.14 for further guidance.

Table B-110. Type 35 integrity information message

Section	*Name*	*Length*	*Scale factor*	*Effective range*		*Unit*	*Comment*
				min	*max*		
DFREI	DFREI 1	4	1	0	15	-	
	to DFREI 53	4	1	0	15	-	
Reserved	Reserved	2	-	-	-	-	
IOD	IODM	2	1	0	3	-	

Note 1.— DFREI is defined in 3.5.11.2.

Note 2.— IODM is defined in 3.5.11.1.

Table B-111. Type 36 integrity information message

Section	*Name*	*Length*	*Scale factor*	*Effective range*		*Unit*	*Comment*
				min	*max*		
DFREI	DFREI 54	4	1	0	15	-	
	to DFREI 92	4	1	0	15	-	
Spare	Spare	56	-	-	-	-	
Reserved	Reserved	2	-	-	-	-	
IOD	IODM	2	1	0	3	-	

Note 1.— DFREI is defined in 3.5.11.2.

Note 2.— IODM is defined in 3.5.11.1.

Note 3.— See Attachment D, 6.7.14 for further guidance.

Table B-112. Type 37 degradation parameters and DFREI scale table

Section	*Name*	*Length*	*Scalefactor*	*Effective range*		*Unit*	*Comment*
				min	*max*		
Common OBAD parameters	$(I_{VALID})_{32}$	6	6	30	408	s	
	$(I_{VALID})_{39/40}$	6	6	30	408	s	
	C_{ER}	6	0.5	0	31.5	m	
	$C_{COVARIANCE}$	7	0.1	0	12.7	-	
GPS OBAD parameters	I_{CORR}	5	6	30	216	s	
	C_{CORR}	8	0.01	0	2.55	m	
	R_{CORR}	8	0.2	0	51	mm/s	
GLONASS OBAD parameters	I_{CORR}	5	6	30	216	s	
	C_{CORR}	8	0.01	0	2.55	m	
	R_{CORR}	8	0.2	0	51	mm/s	
Galileo OBAD parameters	I_{CORR}	5	6	30	216	s	
	C_{CORR}	8	0.01	0	2.55	m	
	R_{CORR}	8	0.2	0	51	mm/s	
BDS OBAD parameters	I_{CORR}	5	6	30	216	s	
	C_{CORR}	8	0.01	0	2.55	m	
	R_{CORR}	8	0.2	0	51	mm/s	

Section	*Name*	*Length*	*Scalefactor*	*Effective range*		*Unit*	*Comment*
				min	*max*		
SBAS OBAD parameters	I_{CORR}	5	6	30	216	s	
	C_{CORR}	8	0.01	0	2.55	m	
	R_{CORR}	8	0.2	0	51	mm/s	
Reserved OBAD parameters	I_{CORR}	5	6	30	216	s	
	C_{CORR}	8	0.01	0	2.55	m	
	R_{CORR}	8	0.2	0	51	mm/s	
DFREI scale table	σ_{DFRE}: DFREI = 0	4	0.0625	0.125	1.0625	m	
	σ_{DFRE}: DFREI = 1	4	0.125	0.25	2.125	m	
	σ_{DFRE}: DFREI = 2	4	0.125	0.375	2.25	m	
	σ_{DFRE}: DFREI = 3	4	0.125	0.5	2.375	m	
	σ_{DFRE}: DFREI = 4	4	0.125	0.625	2.5	m	
	σ_{DFRE}: DFREI = 5	4	0.25	0.75	4.5	m	
	σ_{DFRE}: DFREI = 6	4	0.25	1	4.75	m	
	σ_{DFRE}: DFREI = 7	4	0.25	1.25	5	m	
	σ_{DFRE}: DFREI = 8	4	0.25	1.5	5.25	m	
	σ_{DFRE}: DFREI = 9	4	0.25	1.75	5.5	m	
	σ_{DFRE}: DFREI = 10	4	0.5	2	9.5	m	
	σ_{DFRE}: DFREI = 11	4	0.5	2.5	10	m	
	σ_{DFRE}: DFREI = 12	4	1	3	18	m	
	σ_{DFRE}: DFREI = 13	4	3	4	49	m	
	σ_{DFRE}: DFREI = 14	4	6	10	100	m	
Time ref. ID	Time reference Identifier	3	1	0	7	-	
Common OBAD parameters	Degradation Equation Selector	1	1	0	1	-	
Spare	Spare	1	-	-	-	-	

Note.— All information is defined in 3.5.11.4.

Table B-113. Type 39 SBAS satellite clock, ephemeris and covariance matrix - 1

Section	*Name*	*Length*	*Scalefactor*	*Effective range*		*Unit*	*Comment*
				min	*max*		
Message header	Satellite slot delta	6	1	1	39	-	Offset is 0 and coding range (0 to 63) exceeds the effective range Coding of 1 corresponds to satellite slot delta of 1 See Table B-102
	IODG	2	1	0	3	-	
	SBAS provider ID	5	1	0	31	-	
Orbit parameters	C_{uc}	19	$\pi \times 2^{-19} \times 10^{-4}$	$-\pi/2 \times 10^{-4}$	$\pi/2 \times 10^{-4} \times (1-2^{-18})$	rad	Coded as two's complement
	C_{us}	19	$\pi \times 2^{-19} \times 10^{-4}$	$-\pi/2 \times 10^{-4}$	$\pi/2 \times 10^{-4} \times (1-2^{-18})$	rad	Coded as two's complement
	Idot	22	$7\pi/6 \times 2^{-21} \times 10^{-6}$	$-7\pi/6 \times 10^{-6}$	$7\pi/6 \times 10^{-6} \times (1-2^{-21})$	rad/s	Coded as two's complement
	ω	34	$\pi \times 2^{-33}$	$-\pi$	$\pi \times (1-2^{-33})$	rad	Coded as two's complement
	Ω_o	34	$\pi \times 2^{-33}$	$-\pi$	$\pi \times (1-2^{-33})$	rad	Coded as two's complement
	M_0	34	$\pi \times 2^{-33}$	$-\pi$	$\pi \times (1-2^{-33})$	rad	Coded as two's complement
Clock parameters	a_{Gf0}	25	0.02	-292 766.06	292 766.06	m	Coded as two's complement Coding range (-335 544.32 to 335 544.30) exceeds the effective range
	a_{Gf1}	16	4×10^{-5}	-1.31072	1.31068	m/s	Coded as two's complement

Note 1.— All information is defined in 3.5.11.5.

Note 2.— 3.5.9.6 limits a_{Gf0} to ±292 766.07 m.

Table B-114. Type 40 SBAS satellite clock, ephemeris and covariance matrix - 2

Section	*Name*	*Length*	*Scale factor*	*Effective range*		*Unit*	*Comment*
				min	*max*		
Message header	IODG	2	1	0	3	-	
Orbit parameters	I	33	$\pi \times 2^{-33}$	0	$\pi \times (1-2^{-33})$	rad	
	e	30	2^{-30}	0	$1-2^{-30}$	-	
	a	31	0.02	6 370 000	49 319 672.94	m	
SBAS ephemeris time	t_e	13	16	0	86384	s	Coding range (0 to 131 056) exceeds the effective range
Covariance parameters	Scale exponent	3	1	0	7		
	$E_{1,1}$	9	1	0	511	-	
	$E_{2,2}$	9	1	0	511	-	
	$E_{3,3}$	9	1	0	511	-	
	$E_{4,4}$	9	1	0	511	-	
	$E_{1,2}$	10	1	-512	511	-	Coded as two's complement
	$E_{1,3}$	10	1	-512	511	-	Coded as two's complement
	$E_{1,4}$	10	1	-512	511	-	Coded as two's complement
	$E_{2,3}$	10	1	-512	511	-	Coded as two's complement
	$E_{2,4}$	10	1	-512	511	-	Coded as two's complement
	$E_{3,4}$	10	1	-512	511	-	Coded as two's complement
Integrity parameters	DFREI	4	1	0	15	-	
δR_{CORR}	R_{CORR} scale factor	3	1/8	1/8	1	-	
Spare	Spare	1	1	0	1	-	

Note 1.— DFREI and δR_{CORR} are defined in 3.5.11.2.

Note 2.— All other information is defined in 3.5.11.5.

Table B-115. Type 42 GNSS time offsets

Section	*Name*	*Length*	*Scale factor*	*Effective range*		*Unit*	*Comment*
				min	*max*		
Common UTC parameters	A_{1SNT}	24	2^{-50}	$-2^{23}*2^{-50}$	$(2^{23}-1)*2^{-50}$	s/s	Drift coefficient of SBAS time scale relative to UTC time scale (coded as two's complement)
	A_{0SNT}	35	2^{-33}	-2	$2-2^{-33}$	s	Bias coefficient of SBAS time scale relative to UTC time scale (coded as two's complement)
	t_{0t}	8	3 600	0	601 200	s	Time data reference time of week Coding range (0 to 918 000) exceeds the effective range
	WN_t	8	1	0	255	week	Time data reference week number
	Dt_{LS}	8	1	-128	127	s	Current or past leap second count (coded as two's complement)
	WN_{LSF}	8	1	0	255	week	Leap second reference week number
	DN	3	1	1	7	day	Leap second reference day number Offset is 0 and coding range (0 to 7) exceeds the effective range Coding of 1 corresponds to DN of 1
	Dt_{LSF}	8	1	-128	127	s	Current or future leap second count (coded as two's complement)
	UTC standard identifier	4	1	0	15	-	UTC standard identifier
Validity period parameters	UTC offset status	1	1	0	1	-	SNT-to-UTC offset validity status
	TOW_{app}	8	3 600	0	601 200	s	Validity period reference time of week Coding range (0 to 918 000) exceeds the effective range
	WN_{app}	1	1	0	1	-	Validity period reference week number relative to WN_t
	VP	3	1	0	7	-	Validity period duration
Spare	Spare	97	1	-	-	-	

Table B-116. Type 47 SBAS satellite almanacs

Section	*Name*	*Length*	*Scale factor*	*Effective range*		*Unit*	*Comment*
				min	*max*		
SBAS I header	Satellite slot delta	6	1	1	39	-	Offset is 0 and coding range (0 to 63) exceeds the effective range Coding of 1 corresponds to satellite slot delta of 1 See Table B-102
	SBAS provider ID	5	1	0	31	-	
	Broadcast indicator	1	-	-	-	-	
SBAS I Keplerian parameters	a	16	650	6 370 000	48 967 750	m	
	e	8	2^{-8}	0	0.99609375	-	
	I	13	$\pi \times 2^{-13}$	0	$\pi \times (1-2^{-13})$	rad	
	ω	14	$\pi \times 2^{-13}$	$-\pi$	$\pi \times (1-2^{-13})$	rad	Coded as two's complement
	Ω_0	14	$\pi \times 2^{-13}$	$-\pi$	$\pi \times (1-2^{-13})$	rad	Coded as two's complement
	$\dot{\Omega}$	8	1×10^{-9}	-1.28×10^{-7}	1.27×10^{-7}	rad/s	Coded as two's complement
	M_0	15	$\pi \times 2^{-14}$	$-\pi$	$\pi \times (1-2^{-14})$	rad	Coded as two's complement
	t_a	6	1 800	0	84 600	s	Coding range (0 to 113 400) exceeds the effective range
SBAS II header	Satellite slot delta	6	1	0	39	-	Coding range (0 to 63) exceeds the effective range Coding of 1 corresponds to satellite slot delta of 1 See Table B-102
	SBAS provider ID	5	1	0	31	-	
	Broadcast indicator	1	-	-	-	-	
SBAS II Keplerian parameters	a	16	650	6 370 000	48 967 750	m	
	e	8	2-8	0	0.99609375	-	
	I	13	$\pi \times 2^{-13}$	0	$\pi \times (1-2^{-13})$	rad	
	ω	14	$\pi \times 2^{-13}$	$-\pi$	$\pi \times (1-2^{-13})$	rad	Coded as two's complement
	Ω0	14	$\pi \times 2^{-13}$	$-\pi$	$\pi \times (1-2^{-13})$	rad	Coded as two's complement
	$\dot{\Omega}$	8	1×10^{-9}	-1.28×10^{-7}	1.27×10^{-7}	rad/s	Coded as two's complement
	M0	15	$\pi \times 2^{-14}$	$-\pi$	$\pi \times (1-2^{-14})$	rad	Coded as two's complement

Section	*Name*	*Length*	*Scale factor*	*Effective range*		*Unit*	*Comment*
				min	*max*		
	ta	6	1 800	0	84 600	s	Coding range (0 to 113 400) exceeds the effective range
WN rollover count	$WNRO_{count}$	4	1	0	15	-	15 indicates that the parameter is invalid

Note 1.— SBAS service provider identifiers are defined in 3.5.11.5.

Note 2.— All other parameters are defined in 3.5.11.7.

Table B-117. Reserved

Table B-118. Type 63 null message broadcast on L5

Section	*Name*	*Length*	*Scale factor*	*Effective Range*		*Unit*	*Comment*
				min	*max*		
Reserved	Reserved	216	-	-	-	-	

Note.— The null message is used as a filler message if no other message is available for broadcast for the one-second time slot.

Table B-119. L5 message data time-out intervals

Data	*Associated message types*	*Maximum update interval*	*En-route, terminal, NPA time-out*	*Precision approach, APV time-out*
"Do Not Use"	0	6 s	N/A	N/A
Satellite mask	31	120 s	600 s	600 s
DFREI or DFRECI	32	6 s	18 s	12 s
	34	6 s	18 s	12 s
	35	6 s	18 s	12 s
	36	6 s	18 s	12 s
	40	6 s	18 s	12 s
Satellite clock-ephemeris corrections and covariance matrix	32	$0.5x(I_{Valid})_{32}$ s per corrected satellite	$1.5x(I_{Valid})_{32}$	$(I_{Valid})_{32}$
SBAS satellite clock, ephemeris and covariance matrix	39	$0.5x(I_{Valid})_{39/40}$ s	$1.5x(I_{Valid})_{39/40}$	$(I_{Valid})_{39/40}$
	40			
Degradation parameters	37	120 s	600 s	600 s
DFREI scale table	37	120 s	600 s	600 s
Time reference identifier	37	120 s	600 s	600 s
SBAS service provider identifier	39	120 s	N/A	600 s
	47	120 s	N/A	600 s
SNT-to-UTC offset	42	240 s	Note 3	Note 3

Note 1.— The time-out intervals are defined from the time of arrival at the receiver's antenna port of the last bit of the message.
Note 2.— There is no time-out requirement for other parameters of the Type 47 message than those listedabove.
Note 3.— The SNT-to-UTC offset information in the Type 42 message times out as defined in 3.5.11.6 takinginto account the parameters WN_{app}, TOW_{app} and VP.

3.5.14 DFMC SBAS NON-AIRCRAFT ELEMENTS

Note.— The parameters that are referred to in this section are defined in 3.5.11.

3.5.14.1 *General*

3.5.14.1.1 *Required data and broadcast intervals*. SBAS shall broadcast the data required for the supported functions described in Chapter 3, 3.7.3.4.2 as shown in Table B-120.

Note.— SBAS may broadcast null messages (Type 63 messages) in each time slot for which no other data are broadcast.

3.5.14.1.1.1 All data broadcast by SBAS, whether required or not for a particular function, shall meet the update requirements in Table B-120.

Table B-120. L5 data broadcast intervals and supported functions

Data type	*Maximum broadcast interval*	*DFMC SBAS Ranging*	*Ionosphere-free differential correction*	*Associated message types*
"Do Not Use"	6 s			0
Clock-ephemeris error corrections and covariance matrix data	$0.5x(I_{Valid})_{32}$ s per corrected satellite		R	32
SBAS satellite mask	120 s	R	R	31
Integrity information (DFREI and optionally DFRECI)	6 s	R	R	32, 34, 35, 36 and 40
SBAS satellite clock-ephemeris corrections and covariance matrix data	$0.5x(I_{Valid})_{39/40}$ s	R		39 and 40
OBAD, DFREI scale table and time reference identifier	120 s	R	R	37
SBAS almanac data, broadcast indicator and SBAS service provider ID parameters SNT-to-UTC offset	120 s 240 s	R	R	47 42

Note 1.— "R" indicates that the data must be broadcast to support the function.
Note 2.— Integrity information includes DFRECI only if the Type 34 message is broadcast, otherwise it is limited to DFREI.

3.5.14.1.2 *SBAS radio frequency monitoring*. The SBAS shall monitor the SBAS satellite parameters shown in Table B-121 and take the indicated action.

Table B-121. SBAS L5 radio frequency monitoring

Parameter	*Reference*	*Alarm limit*	*Required action (Note 1)*
Signal power level	Chapter 3, 3.7.3.4.5.3 and 3.7.3.4.6.3	minimum specified power maximum specified power (Note 2)	Minimum: cease DFMC SBAS ranging function. Maximum: cease broadcast.
Modulation	Chapter 3, 3.7.3.4.5.5 and 3.7.3.4.6.5	Monitor for waveform distortion	Cease DFMC SBAS ranging function.
Carrier frequency stability	3.5.2.1 and 3.5.9.1	N/A (Note 3)	Cease DFMC SBAS ranging function unless σ^2_{DFRE} reflects error.
Code/frequency coherence	3.5.2.4 and 3.5.9.4.2	N/A (Note 3)	Cease DFMC SBAS ranging function unless σ^2_{DFRE} reflects error.
Maximum code phase deviation	3.5.2.6 and 3.5.9.6	N/A (Notes 2 and 3)	Cease DFMC SBAS ranging function unless σ^2_{DFRE} reflects error.

Parameter	*Reference*	*Alarm limit*	*Required action (Note 1)*
Convolutional and bi-binary encoding	3.5.2.9 and 3.5.9.9	All transmit messages are erroneous	Cease broadcast.

Notes.—

1. *The monitoring parameters which require action to "cease DFMC SBAS ranging function" are required only for SBAS satellites providing DFMC SBAS ranging. Ceasing the ranging function is accomplished by broadcasting a DFREI of "Do Not Use for SBAS" for that SBAS satellite.*
2. *These parameters can be monitored by their impact on the received signal quality (C/N_0 impact), since that is the impact on the user.*
3. *Alarm limits are not specified because the induced error is acceptable, provided it is represented in the σ^2_{DFRE} parameter. If the error cannot be represented, the ranging function must cease.*

3.5.14.1.3 *"Do Not Use"*. SBAS shall broadcast a "Do Not Use" message (Type 0 message) when necessary to inform users not to use the SBAS satellite broadcast data on L5 and dual-frequency ranging function.

3.5.14.1.4 *Doppler shift in SBAS satellite*. The Doppler shift in the SBAS satellite signal seen at any fixed location within the footprint for any satellite shall not exceed:

a) ±337 Hz for GEO satellite signal; and

b) ±7 kHz for non-GEO satellite signal.

3.5.14.1.5 *SBAS ephemeris parameters*. When broadcasting ephemeris parameters, each SBAS satellite shall broadcast ephemeris parameters for itself as defined in 3.5.11.5.

3.5.14.1.5.1 The SBAS service provider shall ensure that the SBAS ephemeris time parameter t_e in the Type 40 message is set within -43 200 s and +43 199 s of the broadcast time and adjusted for day crossovers.

Note.— t_e is encoded as a time of day and the applicable day/week complies with the [-43 200 s; +43 199 s] time window.

3.5.14.1.6 *Almanac data*. Each SBAS satellite shall broadcast almanac data as defined in 3.5.11.7 for all SBAS satellites of the same service provider.

Note.— Additional information for certain SBAS orbits is given in Attachment D, 6.7.5.

3.5.14.1.6.1 The error in the estimated position of the satellite derived from any Type 47 message broadcast within the previous 15 minutes, with respect to the true satellite position, shall not exceed 3 000 km.

3.5.14.1.6.2 The error in the predicted Doppler shift computed from the Type 47 message shall not exceed ± 337Hz for a period of seven days after the broadcast of the Type 47 message.

Note.— SBAS receivers can expect this almanac accuracy for seven days from reception of the almanac message. The receiver needs to account for day and week crossovers since the almanac reference time is only in seconds of day.

3.5.14.1.6.3 If only one SBAS satellite almanac is provided in the Type 47 message, the bits from 118 to 225 assigned to the second SBAS satellite almanac shall be coded with "0".

3.5.14.1.6.4 SBAS shall set the broadcast indicator to "1" for the SBAS satellite broadcasting the Type 47 message, and set the broadcast indicator to "0" for all other SBAS satellites.

3.5.14.1.6.5 SBAS service provider shall ensure the correctness of the SBAS service provider ID using the value allocated to the SBAS service provider as per Table B-65 in any Type 47 message.

3.5.14.1.6.6 SBAS service provider shall ensure that the SBAS almanac time parameter t_a in the Type 47 message is set within -43 200 s and +43 199 s of the broadcast time and adjusted for day crossovers.

Note.— t_a is encoded as a time of day and the applicable day/week complies with the [-43 200 s; +43 199 s] time window.

3.5.14.2 *Ranging function*. If an SBAS provides a DFMC SBAS ranging function, it shall also comply with the requirements contained in this section.

3.5.14.2.1 Performance requirements

Note.— See Chapter 3, 3.7.3.4.3.

3.5.14.2.2 *Ranging function data*. SBAS shall broadcast the ephemeris parameters, covariance matrix and DFREI value only for the broadcasting SBAS satellite through Type 39 and Type 40 messages both linked by their IODG.

3.5.14.2.3 *Active IODG*. SBAS shall have no more than three active IODG. An active IODG corresponds to an IODG parameter broadcast in Types 39 or 40 messages, which have not timed out as per Table B-119.

3.5.14.3 *Ionosphere-free differential correction function*. If an SBAS provides an ionosphere-free differential correction function, it shall also comply with the requirements contained in this section.

3.5.14.3.1 Performance of the ionosphere-free differential correction.

3.5.14.3.1.1 For en-route, terminal and non-precision approach, given any valid combination of active data, the probability of a horizontal error exceeding the HPL (as defined in 3.5.12.5) for longer than eight consecutive seconds shall be less than 10^{-7} in any hour, assuming a user with zero latency.

3.5.14.3.1.2 Given any valid combination of active data, the probability of an out of tolerance condition (e.g. horizontal error exceeding the HPL or vertical error exceeding the VPL, as defined in 3.5.12.5), for longer than 5.2 consecutive seconds time-to-alert shall be less than 2×10^{-7} during any approach, assuming a user with zero latency.

3.5.14.3.1.3 When SBAS detects that the probability of error exceeding the protection level is above the integrity risk requirement for one of the SBAS operations, the resulting alert information (set DFRE to a larger value or to “Do Not Use for SBAS”), broadcast in Types 32, 34, 35, 36 or 40 messages, shall be repeated three times in a row after the initial notification of the alert condition for a total of four times in four seconds.

Note 1.— A Type 0 message can also be sent four times in a row to indicate an alert condition. See Attachment D, 6.7.4 for additional guidance.

Note 2.— Active data is defined as data that has not timed out per 3.5.15.1.4.2. This requirement includes core satellite constellation(s) and SBAS failures.

Note 3.— Subsequent messages can be transmitted at the normal update rate.

3.5.14.3.2 *SBAS satellite mask and issue of data mask (IODM)*. SBAS shall broadcast an SBAS satellite mask and IODM (Type 31 message). The satellite slot values shall indicate whether or not data are being provided for each GNSS satellite.

3.5.14.3.2.1 SBAS shall change the IODM when there is a change in the SBAS satellite mask by increasing by 1 the IODM Modulo-4 from the latest transmitted value.

3.5.14.3.2.2 The IODM in Type 34, 35 and 36 messages shall equal the IODM broadcast in the satellite mask message (Type 31 message) used to designate the satellites for which data are provided in those messages.

3.5.14.3.2.3 *SBAS shall have no more than two active IODMs*. An active IODM corresponds to a satellite mask broadcast in a Type 31 message, which has not timed out as per Table B-119.

3.5.14.3.3 *Satellite corrections and covariance matrix data.*

3.5.14.3.3.1 Except for the broadcasting SBAS satellite, SBAS shall broadcast clock and ephemeris corrections and covariance matrix (Type 32 message) for any satellite in the SBAS satellite mask (i.e. with satellite slot value equal to "1") when SBAS sets a DFREI between 0 and 14.

Note.— The Type 39/40 message from the broadcasting satellite does not require further correction and therefore SBAS broadcasting satellite will not send correction data for itself.

3.5.14.3.3.2 SBAS shall broadcast clock and ephemeris correction and covariance matrix data with an issue of data navigation (IODN) matching to the clock and ephemeris data from GNSS satellites being corrected (IODs). The IODN value shall be derived from the IODs of GNSS satellite clock and ephemeris data as described in 3.5.11.2.

3.5.14.3.3.3 In order to enable all SBAS users to acquire the new GNSS data upon transmission of new valid clock and ephemeris data from the GNSS satellites, the SBAS shall continue to broadcast corrections and covariance matrix with respect to the old clock and ephemeris data for a period of time of:

a) 120 to 240 seconds for GPS;

b) 150 to 320 seconds for GLONASS;

c) 150 to 350 seconds for Galileo; and

d) 120 to 300 seconds for BDS.

Note.— "Valid clock and ephemeris data" means that the information broadcast by the GNSS satellites is in line with its signal interface control document (ICD), performance standard and SARPs.

3.5.14.3.3.4 For any non-SBAS satellite, SBAS shall only broadcast a Type 32 message when SBAS has continuously monitored that satellite's ephemeris and clock data for at least 300 seconds.

Note.— IOD is defined in 3.5.11.2 and includes a comparison of the GPS LNAV IODE with the 8 LSB of the GPS LNAV IODC. Ephemeris and clock data is derived from the core constellation navigation message being augmented by DFMC SBAS as mentioned in 3.5.11.1.

3.5.14.3.3.5 SBAS service provider shall ensure that the correction time of applicability parameter t_D in the Type 32 message is set within -43 200 s and +43 199 s of the broadcast time and adjusted for day crossovers

Note.— t_D is encoded as a time of day and the applicable day/week complies with the [-43 200 s; +43 199 s] time window.

3.5.14.3.4 *Integrity data*. For each satellite set in the SBAS satellite mask, SBAS shall broadcast DFREI information using DFREI or DFRECI parameters, covariance matrix, scale exponent and degradation parameters such that the integrity requirement in 3.5.14.3.1 is met. If the corrections exceed their coding range or if σ^2_{DFC} (as described in 3.5.12.4.1) cannot be determined, SBAS shall indicate that the satellite is not appropriate for SBAS position ("Do Not Use for SBAS").

Note.— The SBAS receiver will apply the DFRECI to its current active DFREI which can be any active broadcast DFREI.

3.5.14.3.4.1 SBAS shall provide DFREI information, directly via DFREI parameter or indirectly via DFRECI parameter, allowing the computation of σ_{DFRE} (as defined in 3.5.11.4) for the satellite set in the satellite mask and monitored by SBAS using Types 34, 35 or 36 messages at least every six seconds.

3.5.14.3.4.1.1 When using a Type 34 message, the SBAS shall transmit at most seven DFRECIs set to "1".

Note 1.— Instead of transmitting updated DFREI values in the Type 34 message, the SBAS can set some DFRECI values to "2" or "3" to change DFREIs on more than seven satellites and still use the Type 34 message. Types 35 or 36 message can also be used instead of Type 34 messages to provide more DFREI value updates.

Note 2.— The DFRECIs are in augmented slot index order derived from the Type 31 message with a matching IODM.

3.5.14.3.4.1.2 When using a Type 34 message with DFRECI set to "1", the SBAS shall broadcast the new DFREI values in the order corresponding to the order of DFRECI set to "1" across the DFRECI field. The new DFREI value shall apply to the augmented slot index of the corresponding DFRECI value set to "1".

3.5.14.3.4.2 SBAS shall set to "15" any DFREI value in the associated data field of Types 35 and 36 messages, which corresponds to satellite slot number not set in the mask.

3.5.14.3.4.2.1 When using a Type 34 message, SBAS shall set DFRECI value to "3" for DFRECI slots exceeding the maximum augmented slot index.

3.5.14.3.4.2.2 If in a given Type 34 message, the number N of DFRECI set to "1" is below seven, the last 7-N DFREI values of the Type 34 message shall be set to "15".

3.5.14.3.4.3 When using a Type 34 message, SBAS shall transmit a DFRECI of "3" ("Do Not Use for SBAS") instead of transmitting a DFRECI of "2" ("DFREI increased by one") when the most recent active DFREI was set to "14" and the corresponding DFRE value is no longer adequate to ensure integrity as per 3.5.14.3.1.

3.5.14.3.4.4 SBAS shall send $(I_{VALID})32$ and $(I_{VALID})39/40$ in the Type 37 messages corresponding to the time intervals during which the integrity data of Type 32 and Type 39/40 messages can be used.

Note.— These time intervals are measured from the time of arrival of the last bit of Type 32 or the last bit of the last message in the paired Type 39/40 messages being received at the antenna port of the SBAS receiver.

3.5.14.3.4.5 The integrity requirement in 3.5.14.3.1 shall apply throughout the update of parameters in a Type 37 message.

Note.— It is expected that change in the DFREI scale table will be a rare event in the lifetime of an SBAS.

3.5.14.3.4.5.1 For each DFREI, the σ_{DFRE} value shall always be greater than the σ_{DFRE} value specified for lower DFREI in the scale table in the Type 37 message.

3.5.14.3.5 *Old but active data (OBAD)*. SBAS shall broadcast OBAD parameters (Type 37 message) such that the integrity requirement in 3.5.14.3.1 is met.

3.5.14.3.6 *Timing data*

3.5.14.3.6.1 SBAS shall indicate on which reference time the SNT for DFMC SBAS is aligned through the time reference identifier field of the Type 37 message.

3.5.14.3.6.2 If an SBAS provides the $WNRO_{count}$ information with a parameter not permanently set to "15", the SBAS shall monitor the week number rollover by updating the week number rollover count ($WNRO_{count}$) in the Type 47 message for the GNSS constellation identified by the time reference identifier in the Type 37 message.

Note.— The week number rollover count is used to solve the possible ambiguity of the week number value transmitted through the GNSS navigation data. Information on the reference time per constellation to compute the $WNRO_{count}$ can be found in 3.5.11.7.

3.5.14.3.6.3 If a Type 42 message is broadcast, SBAS shall provide information to derive the SNT-to-UTC offset in line with the information set in the VP parameter.

Note.— The UTC offset status parameter can be used by the SBAS to time-out previously broadcast information.

3.5.14.3.6.4 If a Type 42 message is broadcast and if a SNT-to-UTC offset cannot be broadcast by SBAS, SBAS shall broadcast all parameters in common parameter field with all bits coded to zero except the UTC standard identifier set to "7".

3.5.14.4 *Monitoring*

3.5.14.4.1 *SBAS radio frequency monitoring*. The SBAS shall monitor the SBAS satellite parameters shown in Table B-121 and take the indicated action.

Note.— In addition to the radio frequency monitoring requirements in this section, it will be necessary to make special provisions to monitor the pseudo-range acceleration specified in Chapter 3, 3.7.3.4.3.5, carrier phase noise specified in 3.5.9.2, and correlation loss in 3.5.9.5, unless analysis and testing shows that these parameters cannot exceed the stated limits.

3.5.14.4.2 *Data monitoring*. The SBAS shall monitor GNSS ranging signals to ensure that active data meets the requirements of 3.5.14.3.1.

3.5.14.4.2.1 The ground subsystem shall lock on main correlation peaks of the tracked signals used for the SBAS augmentation.

3.5.14.4.2.2 The ground subsystem shall ensure that broadcast data bound the residual error for airborne receivers according to DFMC SBAS receiver design constraints defined in 3.5.15.1.1.3 when exposed to GNSS signal distortions defined in Attachment D, 8.

Note.— SBAS receiver locks on the main correlation peak of the tracked signal following the requirement in 3.5.15.1.5.

3.5.14.4.2.3 The monitor action shall be to set DFRE to a larger value or to "Do Not Use for SBAS" for the satellite.

3.5.14.4.2.4 SBAS shall monitor all active data that can be used by any user within the coverage area.

3.5.14.4.2.5 SBAS shall raise an alert within 5.2 seconds if any combination of active data and GNSS signals-in-space results in a horizontal or vertical position error exceeding respectively the HPL or VPL (as per 3.5.14.3.1).

Note.— The monitoring applies to all failure conditions, including failures in core satellite constellation(s) or SBAS satellites. This monitoring assumes that the aircraft element complies with the requirements of 3.5.15.

3.5.14.4.3 *IOD monitoring*. SBAS shall take appropriate action to ensure integrity of the broadcast information when the active IODN as described in 3.5.11.2 can be linked to more than one valid ephemeris.

Note 1.— Active data is defined as data that has not timed out as per Table B-119. This requirement includes core satellite constellation(s) and SBAS failures.

Note 2.— Additional information on the application of SBAS corrections by an SBAS receiver is provided in 3.5.15.1.4.8 and can be used to assess the time during which a mismatch of IODN and core constellation can be considered by SBAS.

3.5.14.5 *Robustness to core constellation(s) failures*. SBAS shall continue to provide SBAS services after removal of one or several satellites, including a complete core constellation.

Note.— SBAS systems are expected to maintain operation in the presence of failures or anomalies on one or several satellites or failure of a complete core constellation. The level of supported service degrades as more satellites are removed. Removal of a failed or unhealthy satellite does not impact the ability to monitor and correct other satellites.

3.5.15 DFMC SBAS AIRCRAFT ELEMENTS

Note 1.— The parameters that are referred to in this section are defined in 3.5.11.

Note 2.— Whereas all SBAS receivers process signals from SBAS GEO satellites, processing non-GEO SBAS signals is optional.

3.5.15.1 DFMC SBAS-capable GNSS receiver.

3.5.15.1.1 *DFMC SBAS-capable GNSS receiver*. Except as specifically noted, the DFMC SBAS-capable GNSS receiver shall process the signals of the SBAS and meet the requirements applicable to the core constellations it tracks as specified in 3.1.1.3.1 (GPS receiver), and/or 3.1.2.3.1 (GLONASS receiver), and/or 3.1.3.3.1 (Galileo receivers), and/or 3.1.4.3.1 (BDS receivers). Pseudo-range measurements for each satellite shall be smoothed using carrier measurements and the filter identified in 3.5.1.1 with the following pseudo-range observables:

$P_{1,k}$ is the L1 C/A or L1OCd or E1-C or B1C_pilot or SBAS L1 raw pseudo-range measurement in metres;

$P_{2,k}$ is the L5-Q or L3OCd or E5a-Q or B2a_pilot or SBAS L5 raw pseudo-range measurement in metres;

$\varphi_{1,k}$ is the accumulated L1 C/A or L1OCd or E1-C or B1C_pilot or SBAS L1 raw carrier phase measurement in metres;

$\varphi_{2,k}$ is the accumulated L5-Q or L3OCd or E5a-Q or B2a_pilot or SBAS L5 raw carrier phase measurement in metres;

$\gamma_{12} = \left(\frac{f_1}{f_2}\right)^2$ is the square frequency ratio, where f_1 is L1 C/A or L1OCd or E1-C or B1C_pilot or SBAS L1 and f_2 is L5-Q or L3OCd or E5a-Q or B2a_pilot or SBAS L5; and

α is the filter weighting function defined as follows: after 100 seconds have elapsed since filter initialization, α shall be equal to the sample interval in seconds divided by the time constant of 100 seconds. In the first 100 seconds since filter initialization, α shall be equal to the sample interval in seconds divided by the time in seconds since filter initialization.

3.5.15.1.1.1 The receiver shall process the augmented signals as follows:

a) for GPS: the receiver shall use a BPSK(1) replica for L1 C/A signal and a BPSK(10) replica for L5-Q signal. The satellite position and satellite clock shall be based on ephemeris in LNAV message on L1. Group delay correction from LNAV message on L1 shall be applied;

b) for GLONASS: the receiver shall use a BPSK(1) replica for L1OCd and a BPSK(10) replica for L3OCd signal. The satellite position and satellite clock shall be based on ephemeris in strings 10, 11 and 12 of L1OCd or L3OCd;

c) for Galileo: the receiver shall use a BOC(1,1) replica for E1-C signal and a BPSK(10) replica for E5a-Q signal. The satellite position and satellite clock shall be based on ephemeris in F/NAV message on E5a; and

d) for BDS: the receiver shall use a BOC(1,1) replica for B1C_pilot signal and a BPSK(10) replica for B2a_pilot signal. The satellite position and satellite clock shall be based on ephemeris in B CNAV2 message on B2a.

Note.— The equivalent specific ionosphere-free computation is described in BDS-SIS-ICD-B2a (V1.0), 7.8.3 taking into account the group delays broadcast in B-CNAV2 message.

3.5.15.1.1.2 The satellite time correction ($\Delta t_{SV,i}$) for satellite i, defined in 3.5.12.4, shall be computed using the following information:

a) for GPS: the satellite clock correction $\Delta t_{SV,i}$ shall be $(\Delta t_{sv})_{L1}$, computed as described in 3.1.1.2.1.2 taking into account the group delay correction broadcast in the LNAV message;

b) for GLONASS: the satellite clock correction $\Delta t_{SV,i}$ shall be computed as described in 3.1.2.2.2;

c) for Galileo: the satellite clock correction $\Delta t_{SV,i}$ shall be computed as described in 3.1.3.2.2;

d) for BDS: the satellite clock correction $\Delta t_{SV,i}$ shall be computed as described in 3.1.4.2.2.1; and

e) for SBAS ranging satellite: the satellite clock correction $\Delta t_{SV,i}$ shall be computed as $\Delta t_{SV,i} = \alpha_{Gf0} + \alpha_{Gf1}\Delta_t$ with a_{Gf0} and a_{Gf1} broadcast in the Type 39 message and Δ_t defined in 3.5.12.3.1.

3.5.15.1.1.3 *DFMC SBAS aircraft element design constraints*.

3.5.15.1.1.3.1 For processing of L1, L5, E1, E5a, B1C and B2a signals, the aircraft element shall comply with the following constraints:

a) 3 dB bandwidth between 12 and 24 MHz centred around 1 575.42 MHz and around 1 176.45 MHz;

b) differential group delay not greater than 150 ns;

c) early minus late discriminator;

d) L1/E1/B1C correlator spacing between 0.08 and 0.12 L1 chips;

e) L5/E5a/B2a correlator spacing between 0.9 chips and 1.1 L5 chips;

f) frequency roll-off of at least 24 dB per octave until reaching a minimum attenuation to meet the performance objectives in the presence of interfering signals at the interference thresholds specified in 3.7;

g) maintain the minimum attenuation to meet the performance objectives in the presence of interfering signals at the interference thresholds specified in 3.7; and

h) filter centre frequencies around 1 575.42 MHz and 1 176.45 MHz within ±10% of the 3 dB bandwidth specified in a).

Note 1.— This requirement constrains the entire aircraft implementation of the DFMC SBAS capability and not only the DFMC SBAS receiver.

Note 2.— The 0 dB level corresponds to the filter's normalized peak in-band response.

3.5.15.1.1.3.2 For processing of L1OC and L3OC signals, the aircraft element shall comply with the following constraints:

a) 3 dB bandwidth between 12 and 24 MHz centred around 1 600.995 MHz and around 1 202.025 MHz;

b) differential group delay not greater than 150 ns;

c) early minus late discriminator;

d) L1OC correlator spacing between 0.08 and 0.12 L1 chips;

e) L3OC correlator spacing between 0.9 chips and 1.1 L5 chips;

f) frequency roll-off of at least 24 dB per octave until reaching a minimum attenuation to meet the performance objectives in the presence of interfering signals at the interference thresholds specified in 3.7;

g) maintain the minimum attenuation to meet the performance objectives in the presence of interfering signals at the interference thresholds specified in 3.7; and

h) filter centre frequencies around 1 600.995 MHz and 1 202.025 MHz within ±10% of the 3 dB bandwidth specified in a).

Note 1.— This requirement constrains the entire aircraft implementation of the DFMC SBAS capability and not only the DFMC SBAS receiver.

Note 2.— The 0 dB level corresponds to the filter's normalized peak in-band response.

3.5.15.1.2 *GEO SBAS satellite acquisition on L5*. The receiver shall be able to acquire and track GEO satellites for which a stationary receiver at the user receiver location would experience a Doppler shift as large as ±337 Hz.

3.5.15.1.3 *Non-GEO SBAS satellite acquisition on L5*. The non-GEO SBAS capable receiver shall be able to acquire and track non-GEO satellites for which a stationary receiver at the user receiver location would experience a Doppler shift as large as ±7 kHz.

Note.— Information on non-GEO Doppler range is available in Attachment D, 6.7.5.

3.5.15.1.4 Conditions of use of data on L5.

3.5.15.1.4.1 The receiver shall use data from an SBAS message only if the CRC of this message has been verified.

3.5.15.1.4.2 The receiver shall use the information transmitted in DFMC messages only within the time-out period, defined in Table B-119, starting from the reception of the last bit of the message.

3.5.15.1.4.3 Upon reception of a Type 0 message, the receiver shall cease using all data received from this signal that have defined time-out intervals in Table B-119, except for the SBAS service provider identifier which can be used only for the SBAS acquisition process.

3.5.15.1.4.4 The receiver shall only apply integrity data for which Type 34, 35 or 36 messages IODM matches an active Type 31 message IODM.

3.5.15.1.4.5 The reception of new DFREI shall replace the old DFREI.

3.5.15.1.4.6 DFRECI requirements.

3.5.15.1.4.6.1 The receiver shall treat the reception of a DFRECI = 0 or a DFRECI = 2 as though it had received a new copy of the most recent, active DFREI previously received through Type 32, 34, 35, 36 or 40 messages.

3.5.15.1.4.6.2 Upon reception of a DFRECI = 2, the equipment shall use the most recent, active DFREI received through Types 32, 34, 35, 36 or 40 messages and use the σ_{DFRE} corresponding to the active DFREI increased by one.

Note.— The effect of the reception of a DFRECI = 2 ("value increase of 1") is not cumulative.

3.5.15.1.4.6.3 Upon reception of a DFRECI = 3, the receiver shall set the DFREI to "15" ("Do Not Use for SBAS") and exclude the satellite from the SBAS position solution.

3.5.15.1.4.6.4 Upon reception of a DFRECI = 1, the receiver shall update the DFREI value by decoding the corresponding DFREI slot in the order of a Type 34 message DFRECI set to "1" across the DFRECI field.

3.5.15.1.4.7 The receiver shall use the DFREI table through the latest decoded Type 37 message for the computation of σDFRE based on received DFREI.

3.5.15.1.4.8 Upon reception of the initial valid Type 32 message applicable to a given non-SBAS satellite, the receiver shall invalidate for this satellite any retained clock/ephemeris data set containing at least one parameter received for the last time more than 5 minutes before the reception of the initial valid Type 32 message.

Note.— The "initial valid Type 32 message" is the first Type 32 message received when there is no active Type 32 message from the SBAS L5 signal in use.

3.5.15.1.4.9 The receiver shall apply the ephemeris and clock parameters, the covariance matrix parameters, the OBAD parameters and the integrity parameters as described in 3.5.12.4 and 3.5.12.5.

3.5.15.1.4.10 The receiver shall use the content of Types 39 and 40 messages, only when Types 39 and 40 messages with the same IODG have been received and have not timed out.

3.5.15.1.4.11 The receiver shall correctly account for the day and week rollover change when observed after the last received Type 47 message.

3.5.15.1.4.12 The receiver shall only use SBAS augmented satellite ranges from satellites with elevation angles at or above 5 degrees in the DFMC SBAS position computation.

3.5.15.1.4.13 The receiver shall only use correction, integrity and other data obtained from a single SBAS satellite L5 signal, designated by its PRN code, for all satellites used in the position solution.

Note.— When using additional SBAS satellites for ranging, the receiver uses the clock and ephemeris parameters in the Type 39/40 message from the ranging SBAS satellite(s), and the covariance and integrity parameters (e.g. DFREI, delta_R_{CORR}) in the Type 32 message from the SBAS satellite being used for corrections.

3.5.15.1.4.14 Prior to use, the receiver shall verify that the tracked SBAS PRN code matches the PRN code derived from the satellite slot delta field within the almanac data upon reception of the Type 47 message with the broadcast indicator set to "1" or derived from the satellite slot delta field in an active Type 39 message.

3.5.15.1.4.15 In the event of a loss of four successive SBAS messages, the receiver shall invalidate all DFREIs and DFRECIs previously received from this SBAS PRN.

3.5.15.1.4.16 The receiver shall check that the t_D parameter in Type 32 message, as well as t_e and a_{Gf0} parameters in Type 39/40 message, are within the effective range indicated in the message tables under 3.5.13. If the effective range check fails, the message shall be discarded.

Note.— Message bits or fields marked as "Reserved" or "Spare" may take any value during the operational lifetime of the SBAS service.

3.5.15.1.5 The SBAS receiver shall lock on main correlation peak of each of the tracked signals augmented by the SBAS and used in the SBAS position solution.

3.5.15.2 *SBAS satellite position*

3.5.15.2.1 *Position computation with ephemeris*. When using SBAS ranging, the receiver shall decode Type 39/40 messages and determine the position (X_G, Y_G, Z_G) of the SBAS satellite using the protocol described in 3.5.12.3.

3.5.15.2.2 *Position computation with almanac*. When computing the SBAS satellite position using a Type 47 message, the receiver shall determine the position (X_G, Y_G, Z_G) of the SBAS satellite using the protocol described in 3.5.12.2.

3.5.15.3 *Ionosphere-free differential functions*

3.5.15.3.1 *GNSS satellite status function*. The receiver shall exclude satellites from the SBAS position solution if they are identified as "Do Not Use for SBAS".

Note 1.— In the case of a satellite designated marginal or unhealthy by the core satellite constellation(s) health flags, SBAS may broadcast ephemeris and clock corrections that will allow the user to continue using the satellite as long as performance requirements in 3.5.14.3.1 are met.

Note 2.— If satellites identified as "Do Not Use for SBAS" by SBAS are used in the position solution, integrity is not provided by SBAS.

3.5.15.3.2 *Core satellite constellation(s) ranging accuracy for precision approach*. The RMS (1 sigma) of the total airborne contribution in steady state to the error in a corrected ionosphere-free pseudo-range shall be less than or equal to the value in Table B-122 at minimum and maximum power levels.

Table B-122. Core constellation satellite ionosphere-free receiver ranging accuracy for precision approach

	GPS (See Chapter 3, 3.7.3.1.1.8.6)	*GLONASS (See Chapter 3, 3.7.3.1.2.9.4 and 3.7.3.1.2.10.4)*	*Galileo (See Chapter 3, 3.7.3.1.3.8.1 and 3.7.3.1.3.8.2)*	*BDS (See Chapter 3, 3.7.3.1.4.9.4.1 and 3.7.3.1.4.10.4.1)*
Minimum power level	0.4 m	0.65 m	0.4 m	0.4 m
Maximum power level	0.3 m	0.3 m	0.3 m	0.3 m

3.5.15.3.3 The receiver shall use the protocol described in 3.5.12.4 for the SBAS position solution and for the constellation time difference if more than one constellation is augmented by the SBAS.

3.5.15.3.4 The receiver shall compute the SBAS horizontal and vertical protection levels as defined in 3.5.12.5.

3.5.15.3.4.1 The airborne receiver error variance $\sigma^2_{air,DF}$ for satellite i shall be computed as follows:

$$\sigma^2_{air,DF}[i] = \sigma^2_{noise}[i] + \sigma^2_{MP\&AGDV,DF}[i]$$

where

$\sigma^2_{noise}[i]$ is defined in 3.5.15.3.2;

$\sigma^2_{MP\&AGDV,DF}$, the multipath and antenna group delay variation error model for ionosphere-free dual-frequency 100-second smoothed measurements, described by a normal distribution with zero mean and a standard deviation of:

for GPS, Galileo, GLONASS and BDS: $\sigma_{MP\&AGDV,DF}[i] = 0.34 + 0.4\, exp\left(-El_{deg}[i]/14°\right)$ (in metres); and

where $El_{deg}[i]$ is the elevation angle of satellite i (in degrees).

Note. — The models are valid when the receiver is in a steady state.

3.5.15.3.4.2 For ionosphere-free dual-frequency measurements, the residual ionospheric uncertainty shall be defined as:

$$\sigma_{i,iono} = \frac{40.0}{261.0 + (El_{deg}[i])^2} + 0.018 \text{ (in metres)}$$

where $El_{deg}[i]$ is the elevation angle (in degrees) of satellite i.

3.5.15.3.5 The parameters in the SBAS FAS data block applicable to DFMC SBAS receivers shall be as described in 3.5.8.4.2.6 with the exception of the operation type and the approach performance designator as described below:

Operation type: straight-in approach procedure or other operation types applicable to DFMC SBAS receivers.

Coding:
- 0 = straight-in approach procedure with SPID from 0 to 13
- 1 to 7 = spare
- 8 = straight-in approach procedure with SPID from 16 to 31
- 9 to 15 = spare

Approach performance designator (APD): shall indicate the SBAS service supporting the requirements in accordance with Table 3.7.2.4-1 for the approach defined by the FAS data block, including the completion of a system-specific safety analysis for Category 1 if the vertical alert limit (VAL) in the FAS data block is greater than 10 m.

Coding:
- 0 = DFMC SBAS or L1 SBAS service
- 1 = DFMC SBAS service augmenting one or more constellations (L1 SBAS not supported)
- 2 = DFMC SBAS service augmenting at least two constellations (L1 SBAS not supported)
- 3 to 4 = Spare
- 5 = DFMC SBAS service augmenting one or more constellations (L1 SBAS with reduced continuity/availability)
- 6 = DFMC SBAS service augmenting at least two constellations (L1 SBAS with reduced continuity/availability)
- 7 = Spare

Note 1.— The different APD coding values are intended to communicate potential performance differences available from the SBAS services at the approach location based on the number of GNSS frequencies and the number of augmented constellations used. Only DFMC SBAS airborne receivers use the APD to select the appropriate airborne receiver mode to support the operation. Further information can be found in Attachment D, 6.6.5.

Note 2.— "L1 SBAS not supported" means that, for a Category I approach, the L1 SBAS service in the approach region does not meet the system-specific safety assessment for the published VAL. See also the guidance in Attachment D, 3.3.9 and 6.6.5.

Note 3.— "L1 SBAS service with reduced continuity/availability" means that the L1 SBAS service in the approach region does not meet the availability or continuity requirements for the approach. Additional aircraft element integration may be used to satisfy availability and continuity requirements for the approach. The determination of the SBAS-based position domain NSE availability and continuity, using additional aircraft element system integration, and the assessment of the suitability of that availability and continuity for the approach, is the responsibility of the aircraft element. For a Category 1 approach, the L1 SBAS service does meet the system-specific safety assessment for the published VAL, following the guidance in Attachment D, 3.3.9 and 6.6.5.

3.5.15.3.5.1 For operations defined by a FAS data block, the receiver shall determine the operational SBAS service provider identifier (SPID) applicable to the operation as follows: if the operation type is 0, the operational SPID shall be the value of the FAS data block SPID; if the operation type is 8, the operational SPID shall the sum of 16 and the value of the FAS data block SPID.

3.5.15.3.5.2 For operations defined by a FAS data block and the operational SPID is not 15, the receiver shall select SBAS signals with an active SPID decoded from a received Type 47 message that matches the operational SPID determined from the FAS data block (see 3.5.15.3.5.1).

3.5.15.3.5.3 For operations defined by a FAS data block, the receiver shall use the APD to determine the acceptable combination of SBAS navigation service (i.e. DFMC SBAS and/or L1 SBAS) and the number of constellations required to support the intended operation (see Attachment D, 6.6.5).

3.5.15.3.5.4 For operations defined by a FAS data block with an operational SPID of 15 and an APD of two or six, the receiver shall select SBAS satellites that augment two or more constellations that can be used by the receiver.

Note.— If the operational SPID is 15 and the APD is not two or six, the receiver can select any operational SBAS (not broadcasting MT0).

3.5.15.4 *Ranging function*

3.5.15.4.1 *DFMC SBAS satellite ranging accuracy*. The root-mean-square (1 sigma) of the total airborne contribution in steady state to the error in a corrected ionosphere-free pseudo-range for a dual-frequency SBAS ranging satellite under the worst interference environment as defined in 3.7, excluding multipath effects, tropospheric and ionospheric residual errors, shall be less than or equal to 0.8 metres at the minimum received signal power level or equal to 0.6 metres at the maximum received signal power level (Chapter 3, 3.7.3.4.6.3).

3.5.15.5 *Timing function*

3.5.15.5.1 If a UTC time is derived from an SBAS receiver through a Type 42 message, the receiver shall time-out previously received SNT-to-UTC information if the receiver decodes a UTC offset status set to 1.

3.5.15.5.2 If a UTC time is derived from an SBAS receiver through a Type 42 message, the receiver shall not apply the content of the received Type 42 message if the UTC standard identifier is set to 7.

Note.— The receiver may still use previously received information if not timed-out and if the UTC offset status is set to 0 in the received Type 42 message.

3.5.16 INTERFACE BETWEEN SBAS

Note.— Guidance material on the interface between different SBAS service providers is given in Attachment D, 6.3.

3.6 Ground-based augmentation system (GBAS) and ground-based regional augmentation system (GRAS)

3.6.1 GENERAL

The GBAS shall consist of a ground subsystem and an aircraft subsystem. The GBAS ground subsystem shall provide data and corrections for the GNSS ranging signals over a digital VHF data broadcast to the aircraft subsystem. The GRAS ground subsystem shall consist of one or more GBAS ground subsystems.

Note 1.— Guidance material is provided in Attachment D, 7.1.

Note 2.— GBAS SARPs have not yet been updated to support dual-frequency multi-constellation (DFMC) use. These SARPs are applicable to GPS L1 C/A and GLONASS L1OF only. Throughout the GBAS SARPs (Appendix B, 3.6) and in the GBAS sections of Attachment D, the term GLONASS should be understood to refer to GLONASS L1OF signals and services only, and the term GPS should be understood to refer to GPS L1 C/A signals and services only.

3.6.1.1 *GBAS service types*. A GBAS ground subsystem shall support either the positioning service, approach service or both types of service.

Note 1.— Service types refers to a matched set of ground and airborne functional and performance requirements that ensure that quantifiable navigation performance is achieved by the airborne equipment. Guidance material concerning service types is given in Attachment D, 7.1.

Note 2.— GBAS ground facilities are characterized by a GBAS facility classification (GFC). Many GBAS performance and functional requirements depend on the GFC. These SARPs are organized according to which requirements apply for a given facility classification element (i.e. the facility approach service type (FAST) letter, the facility polarization, etc.). Guidance material concerning facility classifications is given in Attachment D, 7.1.4.1.

3.6.1.2 All GBAS ground subsystems shall comply with the requirements of 3.6.1, 3.6.2, 3.6.3, 3.6.4, 3.6.6 and 3.6.7, unless otherwise stated. A FAST D ground subsystem shall comply with all FAST C requirements in addition to the specific FAST D requirements.

3.6.2 RF CHARACTERISTICS

3.6.2.1 *Carrier frequency stability*. The carrier frequency of the data broadcast shall be maintained within ±0.0002 per cent of the assigned frequency.

3.6.2.2 *Bit-to-phase-change encoding*. GBAS messages shall be assembled into symbols, each consisting of 3 consecutive message bits. The end of the message shall be padded by 1 or 2 fill bits if necessary to form the last 3-bit symbol of the message. Symbols shall be converted to D8PSK carrier phase shifts ($\Delta\Phi_k$) in accordance with Table B-123.

Note.— The carrier phase for the kth symbol (ϕ_k) is given by: $\phi_k = \phi_{k-1} + \Delta\phi_k$. The D8PSK signal may be produced as shown in Figure B-29 by combining two quadrature RF signals which are independently suppressed-carrier amplitude-modulated by base band filtered impulses. A positive increase in $\Delta\Phi_k$ represents a counterclockwise rotation in the complex I-Q plane of Figure B-29.

3.6.2.3 *Modulation wave form and pulse shaping filters*. The output of differential phase encoder shall be filtered by a pulse shaping filter whose output, s(t), is described as follows:

$$s(t) = \sum_{k=\infty}^{k=\infty} e^{i\Phi_k} h(t - kT)$$

where

h = the impulse response of the raised cosine filter;
ϕ_k = (as defined in 3.6.2.2);
t = time; and
T = the duration of each symbol = 1/10 500 second.

This pulse shaping filter shall have a nominal complex frequency response of a raised-cosine filter with α = 0.6. The time response, h(t), and frequency response, H(f), of the base band filters shall be as follows:

$$h(t) = \frac{\sin\left(\frac{\pi t}{T}\right)\cos\left(\frac{\pi\alpha t}{T}\right)}{\frac{\pi t}{T}\left[1 - \left(\frac{2\alpha t}{T}\right)^2\right]}$$

$$H(f) = \begin{cases} 1 & \text{for} \quad 0 \le f < \frac{1-\alpha}{2T} \\ \frac{1 - \sin\left(\frac{\pi}{2\alpha}(2fT - 1)\right)}{2} & \text{for} \quad \frac{1-\alpha}{2T} \le f \le \frac{1+\alpha}{2T} \\ 0 & \text{for} \quad f > \frac{1+\alpha}{2T} \end{cases}$$

The output s(t) of the pulse shaping filter shall modulate the carrier.

3.6.2.4 *Error vector magnitude*. The error vector magnitude of the transmitted signal shall be less than 6.5 per cent root-mean-square (1 sigma).

3.6.2.5 *RF data rate.* The symbol rate shall be 10 500 symbols per second ±0.005 per cent, resulting in a nominal bit rate of 31 500 bits per second.

Table B-123. Data encoding

Message bits			Symbol phase shift
I_{3k-2}	I_{3k-1}	I_{3k}	$\Delta\phi_k$
0	0	0	$0\pi/4$
0	0	1	$1\pi/4$
0	1	1	$2\pi/4$
0	1	0	$3\pi/4$
1	1	0	$4\pi/4$
1	1	1	$5\pi/4$
1	0	1	$6\pi/4$
1	0	0	$7\pi/4$

Note.— I_j is the jth bit of the burst to be transmitted, where I_1 is the first bit of the training sequence.

3.6.2.6 *Emissions in unassigned time slots*. Under all operating conditions, the maximum power over a 25 kHz channel bandwidth, centred on the assigned frequency, when measured over any unassigned time slot, shall not exceed –105 dBc referenced to the authorized transmitter power.

Note.— The –105 dBc may not protect reception of emissions in a slot assigned to another desired transmitter for receivers within 80 metres from the undesired transmitting antenna.

3.6.3 DATA STRUCTURE

3.6.3.1 *TRANSMITTER TIMING*

3.6.3.1.1 *Data broadcast timing structure*. The time division multiple access (TDMA) timing structure shall be based on frames and time slots. Each frame shall be 500 milliseconds in duration. There shall be 2 such frames contained in each 1 second UTC epoch. The first of these frames shall start at the beginning of the UTC epoch and the second frame shall start 0.5 seconds after the beginning of the UTC epoch. The frame shall be time division multiplexed such that it shall consist of 8 individual time slots (A to H) of 62.5-millisecond duration.

3.6.3.1.2 *Bursts*. Each assigned time slot shall contain at most 1 burst. To initiate the use of a time slot, the GBAS shall broadcast a burst in that time slot in each of 5 consecutive frames. For each time slot in use, the ground subsystem shall broadcast a burst in at least 1 frame of every 5 consecutive frames.

Note 1.— Bursts contain one or more messages and may be of variable length up to the maximum allowed within the slot as required by 3.6.3.2.

Note 2.— During time slot initiation, the airborne receiver may not receive the first 4 bursts.

3.6.3.1.3 *Timing budget for bursts*

3.6.3.1.3.1 Each burst shall be contained in a 62.5-millisecond time slot.

3.6.3.1.3.2 The beginning of the burst shall occur 95.2 microseconds after the beginning of the time slot with a tolerance of ±95.2 microseconds.

3.6.3.1.3.3 For GBAS/E equipment, the start of the synchronization and ambiguity resolution portion of the burst, transmitted with horizontal polarization (HPOL), shall occur within 10 microseconds of the start of the burst transmitted with vertical polarization (VPOL).

Note.— Table B-124 illustrates the burst timing.

3.6.3.1.4 *Ramp-up and transmitter power stabilization*. The transmitter shall ramp up to 90 per cent of the steady-state power level within 190.5 microseconds after the beginning of the burst (2 symbols). The transmitter shall stabilize at the steady-state power within 476.2 microseconds after the beginning of the burst (5 symbols).

Note.— The transmitter power stabilization period may be used by the aircraft receiver to settle its automatic gain control.

3.6.3.1.5 *Ramp-down*. After the final information symbol is transmitted in an assigned time slot, the transmitter output power level shall decrease to at least 30 dB below the steady-state power within 285.7 microseconds (3 symbols).

3.6.3.2 *Burst organization and coding*. Each burst shall consist of the data elements shown in Table B-125. Encoding of the messages shall follow the sequence: application data formatting, training sequence forward error correction (FEC) generation, application FEC generation and bit scrambling.

3.6.3.2.1 *Synchronization and ambiguity resolution*. The synchronization and ambiguity resolution field shall consist of the 48-bit sequence shown below, with the rightmost bit transmitted first:

010 001 111 101 111 110 001 100 011 101 100 000 011 110 010 000

Table B-124. Burst timing

Event	*Nominal event duration*	*Nominal percentage of steady-state power*
Ramp-up	190.5 µs	0% to 90%
Transmitter power stabilization	285.7 µs	90% to 100%
Synchronization and ambiguity resolution	1 523.8 µs	100%
Transmission of scrambled data	58 761.9 µs	100%
Ramp-down	285.7 µs (*Note 1*)	100% to 0%

Notes.—

1. *Event duration indicated for transmission of scrambled data is for maximum application data length of 1 776 bits, 2 fill bits and nominal symbol duration.*
2. *These timing requirements provide a propagation guard time of 1 259 microseconds, allowing for a one-way propagation range of approximately 370 km (200 NM).*
3. *Where bursts from a GBAS broadcast antenna can be received at a range more than 370 km (200 NM) greater than the range from another broadcast antenna using the next adjacent slot, a longer guard time is required to avoid loss of both bursts. To provide a longer guard time, it is necessary to limit the application data length of the first burst to 1 744 bits. This allows a difference in propagation ranges of up to 692 km (372 NM) without conflict.*

Table B-125. Burst data content

Element	*Data content*	*Number of bits*
Beginning of burst	all zeros	15
Power stabilization		
Synchronization and ambiguity resolution	3.6.3.2.1	48
Scrambled data:	3.6.3.3	
station slot identifier (SSID)	3.6.3.3.1	3
transmission length	3.6.3.3.2	17
training sequence FEC	3.6.3.3.3	5
application data	3.6.3.3.4	up to 1 776
application FEC	3.6.3.3.5	48
fill bits (Note)	3.6.2.2	0 to 2

Note.— Data scrambling of the fill bits is optional (3.6.3.3.6).

3.6.3.3 *SCRAMBLED DATA CONTENT*

3.6.3.3.1 *Station slot identifier (SSID)*. The SSID shall be a numeric value corresponding to the letter designation A to H of the first time slot assigned to the GBAS ground subsystem, where slot A is represented by 0, B by 1, C by 2, … and H by 7. The identifier is transmitted LSB first.

3.6.3.3.2 *Transmission length*. The transmission length shall indicate the total number of bits in both application data and application FEC. The transmission length is transmitted LSB first.

3.6.3.3.3 *Training sequence FEC*. The training sequence FEC shall be computed over the SSID and transmission length fields, using a (25, 20) block code, in accordance with the following equation:

$$[P_1, ..., P_5] = [SSID_1, \ldots, SSID_3, TL_1, \ldots, TL_{17}]\, H^T$$

where

P_n = the nth bit of the training sequence FEC (P_1 shall be transmitted first);
$SSID_n$ = the nth bit of the station slot identifier ($SSID_1$ = LSB);
TL_n = the nth bit in the transmission length (TL_1 = LSB); and
H^T = the transpose of the parity matrix, defined below:

$$H^T = \begin{bmatrix} 0 & 0 & 0 & 0 & 0 & 0 & 0 & 0 & 1 & 1 & 1 & 1 & 1 & 1 & 1 & 1 & 1 & 1 & 1 & 1 \\ 0 & 0 & 1 & 1 & 1 & 1 & 1 & 1 & 0 & 0 & 0 & 0 & 1 & 1 & 1 & 1 & 1 & 1 & 1 & 1 \\ 1 & 1 & 0 & 0 & 0 & 1 & 1 & 1 & 0 & 0 & 1 & 1 & 0 & 0 & 0 & 0 & 1 & 1 & 1 & 1 \\ 1 & 1 & 0 & 1 & 1 & 0 & 1 & 1 & 0 & 1 & 0 & 1 & 0 & 0 & 1 & 1 & 0 & 0 & 1 & 1 \\ 0 & 1 & 1 & 0 & 1 & 0 & 0 & 1 & 1 & 1 & 1 & 0 & 0 & 1 & 0 & 1 & 0 & 1 & 0 & 1 \end{bmatrix}^T$$

Note.— This code is capable of correcting all single bit errors and detecting 75 of 300 possible double bit errors.

3.6.3.3.4 *Application data*. The application data shall consist of one or more message blocks, as defined in 3.6.3.4. The message blocks shall be mapped directly into the application data with no additional overhead of intervening layers.

3.6.3.3.5 *Application FEC*. The application FEC shall be calculated using the application data by means of a systematic, fixed-length, Reed-Solomon (R-S) (255, 249) code.

3.6.3.3.5.1 The field-defining primitive, p(x), of the R-S code shall be:

$$p(x) = x^8 + x^7 + x^2 + x + 1$$

3.6.3.3.5.2 The generator polynomial of the R-S code, g(x), shall be:

$$g(x) = \prod_{i=120}^{125} (x - \alpha^i) = x^6 + \alpha^{176}x^5 + \alpha^{186}x^4 + \alpha^{244}x^3 + \alpha^{176}x^2 + \alpha^{156}x + \alpha^{225}$$

where α is a root of p(x) used for construction of the Galois Field of size 2^8, GF(256), and α^i is the ith primitive element in GF(256).

3.6.3.3.5.3 In generating the application FEC, the data to be encoded, m(x), shall be grouped into 8-bit R-S symbols. All data fields in the message blocks that define the application data shall be ordered such as specified in Tables B-59 and B-60, and in the message tables in 3.6.6. However, since the R-S code is a block code, application data blocks shorter than 249 bytes (1 992 bits) shall be extended to 249 bytes by virtual fill bits set to zero and appended to the application data. These virtual fill bits shall not be transferred to the bit scrambler. The data to be encoded, m(x), shall be defined by:

$$m(x) = a_{248}x^{248} + a_{247}x^{247} + ... + a_{248\text{-length}+1}\, x^{248\text{-length}+1} + a_{248\text{-length}}\, x^{248\text{-length}} + ... + a_1x + a_0$$

where

length represents the number of 8-bit bytes in the application data block;

a_{248} represents the message block identifier, with the rightmost bit defined as the LSB and the first bit of the application data sent to the bit scrambler;

$a_{248\text{-length}+1}$ represents the last byte of the message block CRC, with the leftmost bit defined as the MSB and the last bit of the application data sent to the bit scrambler; and

$a_{248\text{-length}}$, ..., a_1, a_0 are the virtual fill bits (if any).

3.6.3.3.5.4 The 6 R-S check symbols (bi) shall be defined as the coefficients of the remainder resulting from dividing the message polynomial $x^6m(x)$ by the generator polynomial g(x):

$$b(x) = \sum_{i=0}^{5} b_i\, x^i + b_5x^5 + b_4x^4 + b_3x^3 + b_2x^2 + b_1x^1 + b_0 = [x^6m(x)] \bmod g(x)$$

3.6.3.3.5.5 The 8-bit R-S check symbols shall be appended to the application data. Each 8-bit R-S check symbol shall be transmitted MSB first from b_0 to b_5, i.e. the first application FEC bit transferred to the bit scrambler shall be the MSB of b_0 and the last application FEC bit transferred to the bit scrambler shall be the LSB of b_5.

Note 1.— This R-S code is capable of correcting up to 3 symbol errors.

Note 2.— The order of the transmitted 8-bit R-S check symbols of the appended application FEC differs from the VHF data link (VDL) Mode 2. Moreover, for VDL Mode 2 each R-S check symbol is transmitted LSB first.

Note 3.— Example results of application FEC encoding are given in Attachment D, 7.15.

Table B-126. Format of a GBAS message block

Message block	*Bits*
Message block header	48
Message	up to 1 696
CRC	32

Table B-127. Format of message block header

Data field	*Bits*
Message block identifier	8
GBAS ID	24
Message type identifier	8
Message length	8

3.6.3.3.6 *Bit scrambling*

3.6.3.3.6.1 The output of a pseudo-noise scrambler with a 15-stage generator register shall be exclusive OR'ed with the burst data starting with the SSID and ending with the application FEC. Bit scrambling of the fill bits is optional and the set value of the fill bits is optional.

Note.— The fill bits are not used by the aircraft receiver and their values have no impact on the system.

3.6.3.3.6.2 The polynomial for the register taps of the scrambler shall be $1 + x + x^{15}$. The register content shall be rotated at the rate of one shift per bit. The initial status of the register, prior to the first SSID bit of each burst, shall be "1101 0010 1011 001", with the leftmost bit in the first stage of the register. The first output bit of the scrambler shall be sampled prior to the first register shift.

Note.— A diagram of the bit scrambler is given in Attachment D, 7.4.

3.6.3.4 *Message block format*. The message blocks shall consist of a message block header, a message and a 32-bit CRC. Table B-126 shows the construction of the message block. All signed parameters shall be two's complement numbers and all unsigned parameters shall be unsigned fixed point numbers. The scaling of the data shall be as shown in the message tables in 3.6.6. All data fields in the message block shall be transmitted in the order specified in the message tables, with the LSB of each field transmitted first.

Note.— All binary representations reading left to right are MSB to LSB.

3.6.3.4.1 *Message block header*. The message block header shall consist of a message block identifier, a GBAS identifier (ID), a message type identifier and a message length, as shown in Table B-127.

Message block identifier: the 8-bit identifier for the operating mode of the GBAS message block.

Coding: 1010 1010 = normal GBAS message
1111 1111 = test GBAS message
All other values are reserved.

GBAS ID: the four-character GBAS identification to differentiate between GBAS ground subsystems.

Coding: Each character is coded using bits b_1 through b_6 of its International Alphabet No. 5 (IA-5) representation. For each character, bit b1 is transmitted first and six bits are transmitted for each character. Only upper case letters, numeric digits and IA-5 "space" are used. The rightmost character is transmitted first. For a three-character GBAS ID, the rightmost (first transmitted) character shall be IA-5 "space".

Note.— The GBAS ID is normally identical to the location indicator at the nearest airport. Assignment of GBAS IDs will be coordinated as appropriate to avoid conflicts.

Message type identifier: the numeric label identifying the content of the message (Table B-128).

Message length: the length of the message in 8-bit bytes including the 6-byte message block header, the message and the 4 byte message CRC code.

3.6.3.4.2 *Cyclic redundancy check (CRC)*. The GBAS message CRC shall be calculated in accordance with 3.9.

3.6.3.4.2.1 The length of the CRC code shall be k = 32 bits.

3.6.3.4.2.2 The CRC generator polynomial shall be:

$$G(x) = x^{32} + x^{31} + x^{24} + x^{22} + x^{16} + x^{14} + x^{8} + x^{7} + x^{5} + x^{3} + x + 1$$

3.6.3.4.2.3 The CRC information field, M(x), shall be:

$$M(x) = \sum_{i=1}^{n} m_i x^{n-i} + m_1 x^{n-1} + m_2 x^{n-2} + \ldots + m_n x^0$$

3.6.3.4.2.4 M(x) shall be formed from the 48-bit GBAS message block header and all bits of the variable-length message, excluding the CRC. Bits shall be arranged in the order transmitted, such that m_1 corresponds to the first transmitted bit of the message block header, and m_n corresponds to the last transmitted bit of the (n-48) message bits.

3.6.3.4.2.5 The CRC shall be ordered such that r_1 is the first bit transmitted and r32 is the last bit transmitted.

3.6.4 DATA CONTENT

3.6.4.1 *Message types*. The message types that can be transmitted by GBAS shall be as in Table B-128.

3.6.4.2 *TYPE 1 MESSAGE — PSEUDO-RANGE CORRECTIONS*

3.6.4.2.1 The Type 1 message shall provide the differential correction data for individual GNSS ranging sources (Table B-138). The message shall contain three sections:

a) message information (time of validity, additional message flag, number of measurements and the measurement type);

b) low-frequency information (ephemeris decorrelation parameter, satellite ephemeris CRC and satellite availability information); and

c) satellite data measurement blocks.

Note 1.— Transmission of the low-frequency data for SBAS ranging sources is optional.

Note 2.— All parameters in this message type apply to 100-second carrier-smoothed pseudo-ranges.

3.6.4.2.2 Each Type 1 message shall include ephemeris decorrelation parameter, ephemeris CRC and source availability duration parameters for one satellite ranging source. The ephemeris decorrelation parameter, ephemeris CRC and source availability duration shall apply to the first ranging source in the message.

3.6.4.2.3 Pseudo-range correction parameters shall be as follows:

Modified Z-count: the indication of the time of applicability for all the parameters in the message.

Coding: the modified Z-count resets on the hour (xx:00), 20 minutes past the hour (xx:20) and 40 minutes past the hour (xx:40) referenced to GPS time.

Additional message flag: an identification of whether the set of measurement blocks in a single frame for a particular measurement type is contained in a single Type 1 message or a linked pair of messages.

Coding:
0 = All measurement blocks for a particular measurement type are contained in one Type 1 message.
1 = This is the first transmitted message of a linked pair of Type 1 messages that together contain the set of all measurement blocks for a particular measurement type.
2 = Spare
3 = This is the second transmitted message of a linked pair of Type 1 messages that together contain the set of all measurement blocks for a particular measurement type.

Note.— When a linked pair of Type 1 messages is used for a particular measurement type, the number of measurements and low-frequency data are computed separately for each of the two individual messages.

Number of measurements: the number of measurement blocks in the message.

Measurement type: the type of ranging signal from which the corrections have been computed.

Table B-128. GBAS VHF data broadcast messages

Message type identifier	*Message name*
0	Spare
1	Pseudo-range corrections
2	GBAS-related data
3	Null message
4	Final approach segment (FAS) data
5	Predicted ranging source availability
6	Reserved
7	Reserved for national applications
8	Reserved for test applications
9 to 10	Spare
11	Pseudo-range corrections – 30-second smoothed pseudo-ranges
12 to 100	Spare
101	GRAS pseudo-range corrections
102 to 255	Spare

Note.— See 3.6.6 for message formats.

Coding: 0 = C/A or CSA code L1
1 = reserved
2 = reserved
3 = reserved
4 to 7 = spare

Ephemeris decorrelation parameter (P): a parameter that characterizes the impact of residual ephemeris errors due to decorrelation for the first measurement block in the message.

For a SBAS geostationary satellite, the ephemeris decorrelation parameter, if transmitted, shall be coded as all zeros.

For GBAS ground subsystems that do not broadcast the additional data block 1 in the Type 2 message, the ephemeris decorrelation parameter shall be coded as all zeros.

Ephemeris CRC: the CRC computed with the ephemeris data used to determine corrections for the first measurement block in the message. The ephemeris CRC for core satellite constellation(s) ranging sources shall be calculated in accordance with 3.9. The length of the CRC code shall be k = 16 bits. The CRC generator polynomial shall be:

$$G(x) = x^{16} + x^{12} + x^5 + 1$$

The CRC information field, M(x), for a given satellite shall be:

$$M(x) = \sum_{i=1}^{n} m_i x^{n-1} + m_1 x^{n-1} + m_2 x^{n-2} + \ldots + m_n x^0$$

For a GPS satellite, M(x) shall be of length n = 576 bits. M(x) for a GPS satellite shall be calculated using the first 24 bits from each of words 3 to S10 of subframes 1, 2 and 3 of the data transmission from that satellite, ANDed with the GPS satellite ephemeris mask of Table B-129. M(x) shall be arranged in the order that bytes are transmitted by the GPS satellite, but with each byte ordered LSB first, such that m1 corresponds to bit 68 of subframe 1, and m_{576} corresponds to bit 287 of subframe 3.

Note.— M(x) for a GPS satellite does not include word 1 (TLM) or word 2 (HOW), which start each subframe, or the 6 parity bits at the end of each word.

For a GLONASS satellite, M(x) shall be of length n = 340 bits. M(x) for a GLONASS satellite shall be calculated using strings 1, 2, 3 and 4 of the data transmission from that satellite, ANDed with the GLONASS satellite ephemeris mask of Table B-130. Bits shall be arranged in transmission order such that m1 corresponds to bit 85 of string 1, and m340 corresponds to bit 1 of string 4.

For a SBAS geostationary satellite, the ephemeris CRC, if transmitted shall be coded as all zeros.

The CRC shall be transmitted in the order r_9, r_{10}, r_{11}...., r_{16}, r_1, r_2, r_3...r_8, where r_i is the ith coefficient of the remainder R(x) as defined in 3.9.

Source availability duration: the predicted duration for which corrections for the ranging source are expected to remain available, relative to the modified Z-count for the first measurement block.

Coding: 1111 1110 = The duration is greater than or equal to 2 540 seconds.
1111 1111 = Prediction of source availability duration is not provided by this ground subsystem.

3.6.4.2.4 The measurement block parameters shall be as follows:

Ranging source ID: the identity of the ranging source to which subsequent measurement block data are applicable.

Table B-129. GPS satellite ephemeris mask

Subframe 1:	Byte 1	Byte 2	Byte 3		Byte 1	Byte 2	Byte 3
Word 3	0000 0000	0000 0000	0000 0011	Word 4	0000 0000	0000 0000	0000 0000
Word 5	0000 0000	0000 0000	0000 0000	Word 6	0000 0000	0000 0000	0000 0000
Word 7	0000 0000	0000 0000	1111 1111	Word 8	1111 1111	1111 1111	1111 1111
Word 9	1111 1111	1111 1111	1111 1111	Word 10	1111 1111	1111 1111	1111 1100
Subframe 2:	Byte 1	Byte 2	Byte 3		Byte 1	Byte 2	Byte 3
Word 3	1111 1111	1111 1111	1111 1111	Word 4	1111 1111	1111 1111	1111 1111
Word 5	1111 1111	1111 1111	1111 1111	Word 6	1111 1111	1111 1111	1111 1111
Word 7	1111 1111	1111 1111	1111 1111	Word 8	1111 1111	1111 1111	1111 1111
Word 9	1111 1111	1111 1111	1111 1111	Word 10	1111 1111	1111 1111	0000 0000
Subframe 3:	Byte 1	Byte 2	Byte 3		Byte 1	Byte 2	Byte 3
Word 3	1111 1111	1111 1111	1111 1111	Word 4	1111 1111	1111 1111	1111 1111
Word 5	1111 1111	1111 1111	1111 1111	Word 6	1111 1111	1111 1111	1111 1111
Word 7	1111 1111	1111 1111	1111 1111	Word 8	1111 1111	1111 1111	1111 1111
Word 9	1111 1111	1111 1111	1111 1111	Word 10	1111 1111	1111 1111	1111 1100

Table B-130. GLONASS satellite ephemeris mask

String 1:
0 0000 0000 0000 0000 0000 1111 1111 1111 1111 1111 1111 1111
1111 1111 1111 1111 1111 1111 1111 0000 0000
String 2:
0 0000 0000 0000 0000 0000 1111 1111 1111 1111 1111 1111 1111
1111 1111 1111 1111 1111 1111 1111 0000 0000
String 3:
0 0000 0111 1111 1111 0000 1111 1111 1111 1111 1111 1111 1111
1111 1111 1111 1111 1111 1111 1111 0000 0000
String 4:
0 0000 1111 1111 1111 1111 1111 1100 0000 0000 0000 0000 0000
0000 0000 0000 0000 0000 0000 0000 0000 0000

Coding:

1 to 36	=	GPS satellite IDs (PRN)
37	=	reserved
38 to 61	=	GLONASS satellite IDs (slot number plus 37)
62 to 119	=	spare
120 to 158	=	SBAS satellite IDs (PRN)
159 to 255	=	spare

Issue of data (IOD): The issue of data associated with the ephemeris data used to determine pseudo-range and range rate corrections.

Coding: for GPS, IOD = GPS IODE parameter (3.1.1.3.2.2)
for GLONASS, IOD = GLONASS "t_b" parameter (see 3.2.1.3.1)
for SBAS, IOD = 1111 1111

Note.— For GLONASS insert 0 in the MSB of the IOD.

Pseudo-range correction (PRC): the correction to the ranging source pseudo-range.

Range rate correction (RRC): the rate of change of the pseudo-range correction.

σ_{pr_gnd}: the standard deviation of a normal distribution associated with the signal-in-space contribution of the pseudo-range error at the GBAS reference point (3.6.5.5.1, 3.6.5.5.2 and 3.6.7.2.2.4).

Coding: 1111 1111 = Ranging source correction invalid.

B_1 through B_4: are the integrity parameters associated with the pseudo-range corrections provided in the same measurement block. For the ith ranging source these parameters correspond to $B_{i,1}$ through $B_{i,4}$ (3.6.5.5.1.2, 3.6.5.5.2.2 and 3.6.7.2.2.4). During continuous operation, the indices "1-4" correspond to the same physical reference receiver for every epoch transmitted from a given ground subsystem with the following exception: the physical reference receiver tied to any of the indices 1 to 4 can be replaced by any other physical reference receiver (including a previously removed one) that has not been used for transmissions during the last 5 minutes.

Coding: 1000 0000 = Reference receiver was not used to compute the pseudo-range correction.

Note 1.— A physical reference receiver is a receiver with an antenna at a fixed location.

Note 2. — Some airborne inertial integrations may expect a largely static correspondence of the reference receivers to the indices. Refer to RTCA/DO-253D, Appendix L.

3.6.4.3 *Type 2 message — GBAS-related data*. Type 2 message shall identify the location of the GBAS reference point at which the corrections provided by the GBAS apply and shall give other GBAS-related data (Table B-69). GBAS-related data parameters shall be as follows:

Note.— Additional data blocks may be included in the Type 2 message. Additional data block 1 and additional data block 2 are defined. In the future, other additional data blocks may be defined. Data blocks 2 through 255 are variable length and may be appended to the message after additional data block 1 in any order.

GBAS reference receivers: the number of GNSS reference receivers installed in this GBAS ground subsystem.

Coding:
0 = GBAS installed with 2 reference receivers
1 = GBAS installed with 3 reference receivers
2 = GBAS installed with 4 reference receivers
3 = The number of GNSS reference receivers installed in this GBAS ground subsystem is not applicable

Ground accuracy designator letter: the letter designator indicating the minimum signal-in-space accuracy performance provided by GBAS (3.6.7.1.1).

Coding:
0 = accuracy designation A
1 = accuracy designation B
2 = accuracy designation C
3 = spare

GBAS continuity/integrity designator (GCID): numeric designator indicating the operational status of the GBAS.

Coding: 0 = spare
1 = GCID 1
2 = GCID 2
3 = GCID 3
4 = GCID 4
5 = spare
6 = spare
7 = unhealthy

Note 1.— The values of GCID 2, 3 and 4 are specified in order to ensure compatibility of equipment with future GBAS.

Note 2.— The value of GCID 7 indicates that all approach services supported by the ground facility are unavailable.

Local magnetic variation: the published magnetic variation at the GBAS reference point.

Coding: Positive value denotes east variation (clockwise from true north), Negative value denotes west variation (counter-clockwise from true north)

100 0000 0000 = Precision approach procedures supported by this GBAS are published based on true bearing.

Note.— Local magnetic variation is chosen to be consistent with procedure design and is updated during magnetic epoch years.

$\sigma_{vert\_iono\_gradient}$: the standard deviation of a normal distribution associated with the residual ionospheric uncertainty due to spatial decorrelation (3.6.5.4).

Refractivity index (N_r): the nominal tropospheric refractivity index used to calibrate the tropospheric correction associated with the GBAS ground subsystem (3.6.5.3).

Coding: This field is coded as two's complement number with an offset of +400. A value of zero in this field indicates a refractivity index of 400.

Scale height (h_0): a scale factor used to calibrate the tropospheric correction and residual tropospheric uncertainty associated with the GBAS ground subsystem (3.6.5.3).

Refractivity uncertainty (σ_n): the standard deviation of a normal distribution associated with the residual tropospheric uncertainty (3.6.5.3).

Latitude: the latitude of the GBAS reference point defined in arc seconds.

Coding: Positive value denotes north latitude.
Negative value denotes south latitude.

Longitude: the longitude of the GBAS reference point defined in arc seconds.

Coding: Positive value denotes east longitude.
Negative value denotes west longitude.

Reference point height: the height of the GBAS reference point above the WGS-84 ellipsoid.

3.6.4.3.1 *Additional data block 1 parameters*. Additional data block 1 parameters shall be as follows:

REFERENCE STATION DATA SELECTOR (RSDS): the numerical identifier that is used to select the GBAS ground subsystem.

Note.— The RSDS is different from every other RSDS and every reference path data selector (RPDS) broadcast on the same frequency by every GBAS ground subsystem within the broadcast region.

Coding: 1111 1111 = GBAS positioning service is not provided

MAXIMUM USE DISTANCE (D_{max}): the maximum distance (slant range) from the GBAS reference point within which pseudo-range corrections are applied by the aircraft element.

Note.— This parameter does not indicate a distance within which VHF data broadcast field strength requirements are met.

Coding: 0 = distance limitation

GPS EPHEMERIS MISSED DETECTION PARAMETER, GBAS Positioning Service ($K_{md\_e\_POS,GPS}$): the multiplier for computation of the ephemeris error position bound for the GBAS positioning service derived from the probability of missed detection given that there is an ephemeris error in a GPS satellite.

For GBAS ground subsystems that do not broadcast corrections for GPS ranging sources or that do not provide the GBAS positioning service, this parameter shall be coded as all zeros.

GPS EPHEMERIS MISSED DETECTION PARAMETER, GBAS approach service types A, B or C ($K_{md\_e,GPS)}$: the multiplier for computation of the ephemeris error position bound for GBAS approach service types A, B and C derived from the probability of missed detection given that there is an ephemeris error in a GPS satellite.

For GBAS ground subsystems that do not broadcast corrections for GPS ranging sources, this parameter shall be coded as all zeros.

GLONASS EPHEMERIS MISSED DETECTION PARAMETER, GBAS Positioning Service ($K_{md\_e,\_POS,GLONASS)}$): the multiplier for computation of the ephemeris error position bound for the GBAS positioning service derived from the probability of missed detection given that there is an ephemeris error in a GLONASS satellite.

For GBAS ground subsystems that do not broadcast corrections for GLONASS ranging sources or that do not provide positioning service, this parameter shall be coded as all zeros.

GLONASS EPHEMERIS MISSED DETECTION PARAMETER, GBAS approach service types A, B or C ($K_{md\_e\_,GLONASS)}$): the multiplier for computation of the ephemeris error position bound for GBAS approach service types A, B and C derived from the probability of missed detection given that there is an ephemeris error in a GLONASS satellite.

For GBAS ground subsystems that do not broadcast corrections for GLONASS ranging sources, this parameter shall be coded as all zeros.

3.6.4.3.2 Additional data blocks. For additional data blocks other than additional data block 1, the parameters for each data block shall be as follows:

ADDITIONAL DATA BLOCK LENGTH: the number of bytes in the additional data block, including the additional data block length and additional data block number fields.

ADDITIONAL DATA BLOCK NUMBER: the numerical identifier of the type of additional data block.

Coding: 0 to 1 = reserved
2 = additional data block 2, GRAS broadcast stations
3 = additional data block 3, GAST D parameters
4 = additional data block 4, VDB authentication parameters
5 to 255 = spare

ADDITIONAL DATA PARAMETERS: the set of data defined in accordance with the additional data block number.

3.6.4.3.2.1 *GRAS broadcast stations*

Parameters for additional data block 2 shall include data for one or more broadcast stations as follows (Table B-131):

CHANNEL NUMBER: the channel number, as defined in 3.6.5.7, associated with a GBAS broadcast station.

Note.— The channel number in this field refers to a frequency and an RSDS.

Δ*LATITUDE*: the difference of latitude of a GBAS broadcast station, measured from the latitude provided in the latitude parameter of Type 2 message.

Coding: Positive value denotes that the GBAS broadcast station is north of the GBAS reference point.
Negative value denotes that the GBAS broadcast station is south of the GBAS reference point.

Δ*LONGITUDE*: the difference of longitude of a GBAS broadcast station, measured from the longitude provided in the longitude parameter of Type 2 message.

Coding: Positive value denotes that the GBAS broadcast station is east of the GBAS reference point.
Negative value denotes that the GBAS broadcast station is west of the GBAS reference point.

Note.— Guidance material concerning additional data block 2 is provided in Attachment D, 7.17.

3.6.4.3.2.2 *GAST D parameters*

Parameters for additional data block 3 shall include parameters (Table B-132) to be used when the active service type is GAST D as follows:

$K_{md\_e\_D,GLONASS}$ *(*$K_{md\_e\_D,GLONASS}$*)*: is the multiplier for computation of the ephemeris error position bound for GAST D derived from the probability of missed detection given that there is an ephemeris error in a GLONASS satellite. For GBAS ground subsystems that do not broadcast corrections for GLONASS ranging sources, this parameter is coded as all zeros.

Note.— This parameter, $K_{md\_e\_D,GLONASS}$*, may be different than the ephemeris decorrelation parameter* $K_{md\_e\_GLONASS}$ *provided in additional data block 1 of the Type 2 message. Additional information regarding the difference in these parameters is given in Attachment D, 7.5.6.1.2 and 7.5.6.1.3.*

$K_{md\_e\_D,GPS}$ *(*$K_{md\_e\_D,GPS}$*)*: is the multiplier for computation of the ephemeris error position bound for GAST D derived from the probability of missed detection given that there is an ephemeris error in a GPS satellite. For GBAS ground subsystems that do not broadcast corrections for GPS ranging sources, this parameter is coded as all zeros.

Note.— This parameter, $K_{md\_e\_D,GPS}$*, may be different than the ephemeris decorrelation parameter* $K_{md\_e\_GPS}$ *provided in additional data block 1 of the Type 2 message. Additional information regarding the difference in these parameters is given in Attachment D, 7.5.6.1.2 and 7.5.6.1.3.*

Sigma_vert_iono_gradient_D ($\sigma_{vert\_iono\_gradient\_D}$): is the standard deviation of a normal distribution associated with the residual ionospheric uncertainty due to spatial decorrelation. This parameter is used by airborne equipment when its active approach service type is D.

Note.— This parameter, Sigma_vert_iono_gradient_D, may be different than the ionospheric decorrelation parameter Sigma_vert_iono_gradient provided in the Type 2 message. Additional information regarding the difference in these parameters is given in Attachment D, 7.5.6.1.2 and 7.5.6.1.3.

Y_{EIG}: is the maximum value of E_{IG} at zero distance from the GBAS reference point. This parameter is used by airborne equipment when its active approach service type is D.

M_{EIG}: is the slope of maximum E_{IG} versus distance from the GBAS reference point. This parameter is used by airborne equipment when its active approach service type is D.

Table B-131. GRAS broadcast station data

Data content	*Bits used*	*Range of values*	*Resolution*
Channel number	16	20001 to 39999	1
ΔLatitude	8	±25.4°	0.2°
ΔLongitude	8	±25.4°	0.2°

Table B-132. Additional data block 3 GAST D parameters

Data content	*Bits used*	*Range of values*	*Resolution*
$K_{md\_e\_D,GPS}$	8	0 to 12.75	0.05
$K_{md\_e\_D,GLONASS}$	8	0 to 12.75	0.05
$\sigma_{vert\_iono\_gradient\_D}$	8	0 to 25.5 × 10^{-6} m/m	0.1 × 10^{-6} m/m
Y_{EIG}	5	0 to 3.0 m	0.1
M_{EIG}	3	0 to 0.7 m/km	0.1

3.6.4.3.2.3 *VDB authentication parameters*

Additional data block 4 includes information needed to support VDB authentication protocols (Table B-133).

Slot group definition: This 8-bit field indicates which of the 8 slots (A-H) are assigned for use by the ground station. The field is transmitted LSB first. The LSB corresponds to slot A, the next bit to slot B, and so on. A "1" in the bit position indicates the slot is assigned to the ground station. A "0" indicates the slot is not assigned to the ground station.

Table B-133. VDB authentication parameters

Data content	*Bits used*	*Range of values*	*Resolution*
Slot group definition	8	—	—

3.6.4.4 *TYPE 3 MESSAGE — NULL MESSAGE*

3.6.4.4.1 The Type 3 message is a variable length "null message" which is intended to be used by ground subsystems that support the authentication protocols (see 3.6.7.4).

3.6.4.4.2 The parameters for the Type 3 message shall be as follows:

Filler: a sequence of bits alternating between "1" and "0" with a length in bytes that is 10 less than the value in the message length field in the message header.

3.6.4.5 *Type 4 message — Final approach segment (FAS)*. Type 4 message shall contain one or more sets of FAS data, each defining a single precision approach (Table B-143). Each Type 4 message data set shall include the following:

Data set length: the number of bytes in the data set. The data set includes the data set length field and the associated FAS data block, FAS vertical alert limit (FASVAL)/approach status and FAS lateral alert limit (FASLAL)/approach status fields.

FAS data block: the set of parameters to identify an approach and define its associated approach path.

Coding: See 3.6.4.5.1 and Table B-134.

Note.— Guidance material for FAS path definition is contained in Attachment D, 7.11.

FASVAL/approach status: the value of the parameter FASVAL as used in 3.6.5.6.

Coding: 1111 1111 = Do not use vertical deviations.

Note.— The range and resolution of values for FASVAL depend upon the approach performance designator in the associated FAS data block.

FASLAL/approach status: the value of the parameter FASLAL as used in 3.6.5.6.

Coding: 1111 1111 = Do not use approach.

Note.— The Procedures for Air Navigation Services — Aircraft Operations *(PANS-OPS) (Doc 8168), Volume II, specifies conventions to be used by procedure designers when applying the FAS data block definitions and codings below to encode procedures.*

3.6.4.5.1 *FAS data block*. The FAS data block shall contain the parameters that define a single GAST A, B, C or D approach. The FAS path is a line in space defined by the landing threshold point/fictitious threshold point (LTP/FTP), flight path alignment point (FPAP), threshold crossing height (TCH) and glide path angle (GPA). The local level plane for the approach is a plane perpendicular to the local vertical passing through the LTP/FTP (i.e. tangent to the ellipsoid at the LTP/FTP). Local vertical for the approach is normal to the WGS-84 ellipsoid at the LTP/FTP. The glide path intercept point (GPIP) is where the final approach path intercepts the local level plane. FAS data block parameters shall be as follows:

Operation type: straight-in approach procedure or other operation types.

Coding: 0 = straight-in approach procedure
1 to 15 = spare

Note.— Offset procedures are straight-in procedures and coded as "0".

Table B-134. Final approach segment (FAS) data block

Data content	*Bits used*	*Range of values*	*Resolution*
Operation type	4	0 to 15	1
SBAS provider ID	4	0 to 15	1
Airport ID	32	—	—
Runway number	6	1 to 36	1
Runway letter	2	—	—
Approach performance designator	3	0 to 7	1
Route indicator	5	—	—
Reference path data selector	8	0 to 48	1
Reference path identifier	32	—	—
LTP/FTP latitude	32	±90.0°	0.0005 arcsec
LTP/FTP longitude	32	±180.0°	0.0005 arcsec
LTP/FTP height	16	–512.0 to 6 041.5 m	0.1 m
ΔFPAP latitude	24	±1.0°	0.0005 arcsec
ΔFPAP longitude	24	±1.0°	0.0005 arcsec
Approach TCH (Note)	15	0 to 1 638.35 m or 0 to 3 276.7 ft	0.05 m or 0.1 ft
Approach TCH units selector	1	—	—
GPA	16	0 to 90.0°	0.01°
Course width	8	80 to 143.75 m	0.25 m
ΔLength offset	8	0 to 2 032 m	8 m
Final approach segment CRC	32	—	—

Note.— Information can be provided in either feet or metres as indicated by the approach TCH unit selector.

SBAS service provider ID: indicates the service provider associated with this FAS data block.

Coding: See Table B-65.
14 = FAS data block is to be used with GBAS only.
15 = FAS data block can be used with any SBAS service provider.

Note.— This parameter is not used for approaches conducted using GBAS or GRAS pseudo-range corrections.

Airport ID: the three- or four-letter designator used to designate an airport.

Coding: Each character is coded using the lower 6 bits of its IA-5 representation. For each character, b_i is transmitted first, and 2 zero bits are appended after b_6, so that 8 bits are transmitted for each character. Only upper case letters, numeric digits and IA-5 "space" are used. The rightmost character is transmitted first. For a three-character airport ID, the rightmost (first transmitted) character shall be IA-5 "space".

Runway number: the approach runway number.

Coding: 1 to 36 = runway number

Note.— For heliport and point-in-space operations, the runway number value is the integer nearest to one tenth of the final approach course, except when that integer is zero, in which case the runway number is 36.

Runway letter: the one-letter designator used, as necessary, to differentiate between parallel runways.

Coding:
0 = no letter
1 = R (right)
2 = C (centre)
3 = L (left)

Approach performance designator: the general information about the approach design.

Coding:
0 = GAST A or B
1 = GAST C
2 = GAST C and GAST D
3 = GAST C, GAST D and an additional approach service type to be defined in the future
4 = GAST C, GAST D and two additional approach service types to be defined in the future
5 to 7 = spare

Note.— Some airborne equipment designed for Category I performance is insensitive to the value of the APD. It is intended that airborne equipment designed for Category I performance accepts APD values of at least 1-4 as valid to accommodate future extensions to higher performance types using the same FAS data block.

Route indicator: the one-letter identifier used to differentiate between multiple approaches to the same runway end.

Coding: The letter is coded using bits b_1 through b_5 of its IA-5 representation. Bit b_1 is transmitted first. Only upper case letters, excluding "I" and "O", or IA-5 "space" are used.

Reference path data selector (RPDS): the numeric identifier that is used to select the FAS data block (desired approach).

Note.— The RPDS for a given FAS data block is different from every other RPDS and every reference station data selector (RSDS) broadcast on the same frequency by every GBAS within the broadcast region.

Reference path identifier (RPI): the three or four alphanumeric characters used to uniquely designate the reference path.

Coding: Each character is coded using bits b_1 through b_6 of its IA-5 representation. For each character, b_1 is transmitted first, and 2 zero bits are appended after b6 so that 8 bits are transmitted for each character. Only upper case letters, numeric digits and IA-5 "space" are used. The rightmost character is transmitted first. For a three-character reference path identifier, the rightmost (first transmitted) character shall be IA-5 "space".

Note.— The LTP/FTP is a point over which the FAS path passes at a relative height specified by the TCH. LTP is normally located at the intersection of the runway centre line and the threshold.

LTP/FTP latitude: the latitude of the LTP/FTP point in arc seconds.

Coding: Positive value denotes north latitude.
Negative value denotes south latitude.

LTP/FTP longitude: the longitude of the LTP/FTP point in arc seconds.

Coding: Positive value denotes east longitude.
Negative value denotes west longitude.

LTP/FTP height: the height of the LTP/FTP above the WGS-84 ellipsoid.

Coding: This field is coded as an unsigned fixed-point number with an offset of –512 metres. A value of zero in this field places the LTP/FTP 512 metres below the earth ellipsoid.

Note.— The FPAP is a point at the same height as the LTP/FTP that is used to define the alignment of the approach. The origin of angular deviations in the lateral direction is defined to be 305 metres (1 000 ft) beyond the FPAP along the lateral FAS path. For an approach aligned with the runway, the FPAP is at or beyond the stop end of the runway.

Δ*FPAP latitude*: the difference of latitude of the runway FPAP from the LTP/FTP in arc seconds.

Coding: Positive value denotes the FPAP latitude north of LTP/FTP latitude.
Negative value denotes the FPAP latitude south of the LTP/FTP latitude.

Δ*FPAP longitude*: the difference of longitude of the runway FPAP from the LTP/FTP in arc seconds.

Coding: Positive value indicates the FPAP longitude east of LTP/FTP longitude.
Negative value indicates the FPAP longitude west of LTP/FTP longitude.

Approach TCH: the height of the FAS path above the LTP/FTP defined in either feet or metres as indicated by the TCH units selector.

Approach TCH units selector: the units used to describe the TCH.

Coding: 0 = feet
1 = metres

Glide path angle (GPA): the angle of the FAS path with respect to the horizontal plane tangent to the WGS-84 ellipsoid at the LTP/FTP.

Course width: the lateral displacement from the path defined by the FAS at the LTP/FTP at which full-scale deflection of a course deviation indicator is attained.

Coding: This field is coded as an unsigned fixed-point number with an offset of 80 metres. A value of zero in this field indicates a course width of 80 metres at the LTP/FTP.

ΔLength offset: the distance from the stop end of the runway to the FPAP.

Coding: 1111 1111 = not provided

Final approach segment CRC: the 32-bit CRC appended to the end of each FAS data block in order to ensure approach data integrity. The 32-bit final approach segment CRC shall be calculated in accordance with 3.9. The length of the CRC code shall be k = 32 bits.

The CRC generator polynomial shall be:

$$G(x) = x^{32} + x^{31} + x^{24} + x^{22} + x^{16} + x^{14} + x^{8} + x^{7} + x^{5} + x^{3} + x + 1$$

The CRC information field, M(x), shall be:

$$M(x) = \sum_{i=1}^{272} m_i \, x^{272-i} = m_1 x^{271} + m_2 x^{270} + \ldots + m_{272} x^{0}$$

M(x) shall be formed from all bits of the associated FAS data block, excluding the CRC. Bits shall be arranged in the order transmitted, such that m_1 corresponds to the LSB of the operation type field, and m_{272} corresponds to the MSB of the Δlength offset field. The CRC shall be ordered such that r_1 is the LSB and r32 is the MSB. The CRC information field,

3.6.4.6 *Type 5 message — predicted ranging source availability*. When used, the Type 5 message shall contain rising and setting information for the currently visible or soon to be visible ranging sources. Predicted ranging source availability parameters shall be as follows:

Modified Z-count: indicates the time of applicability of the parameters in this message.

Coding: Same as modified Z-count field in Type 1 message (3.6.4.2).

Number of impacted sources: the number of sources for which duration information applicable to all approaches is provided.

Coding: 0 = Only specified obstructed approaches have limitations.
1 to 31 = The number of ranging sources impacted.

Ranging source ID: as for Type 1 message (3.6.4.2).

Source availability sense: indicates whether the ranging source will become available or cease to be available.

Coding: 0 = Differential corrections will soon cease to be provided for the associated ranging source.
1 = Differential corrections will soon start to be provided for the associated ranging source.

Source availability duration: the predicted minimum ranging source availability duration relative to the modified Z-count.

Coding: 111 1111 = The duration is greater than or equal to 1 270 seconds.

Number of obstructed approaches: the number of approaches for which the corrections will be reduced due to approach unique constellation masking.

Reference path data selector: an indication of the FAS data block to which the source availability data applies (3.6.4.5.1).

Number of impacted sources for this approach: the number of sources for which duration information applicable only to this approach is provided.

3.6.4.7 *TYPE 6 MESSAGE*

Note.— Type 6 message is reserved for future use to provide the information required for Category II/III precision approaches.

3.6.4.8 *TYPE 7 MESSAGE*

Note.— Type 7 message is reserved for national applications.

3.6.4.9 *TYPE 8 MESSAGE*

Note.— Type 8 message is reserved for local and regional test applications.

3.6.4.10 *TYPE 101 MESSAGE — GRAS PSEUDO-RANGE CORRECTIONS*

3.6.4.10.1 The Type 101 message shall provide the differential correction data for individual GNSS ranging sources (Table B-139). The message shall contain three sections:

a) message information (time of validity, additional message flag, number of measurements and the measurement type);

b) low-frequency information (ephemeris decorrelation parameter, satellite ephemeris CRC and satellite availability information); and

c) satellite data measurement blocks.

Note.— All parameters in this message type apply to 100-second carrier-smoothed pseudo-ranges.

3.6.4.10.2 Each Type 101 message shall include ephemeris decorrelation parameter, ephemeris CRC and source availability duration parameters for one satellite ranging source. The ephemeris decorrelation parameter, ephemeris CRC and source availability duration shall apply to the first ranging source in the message.

3.6.4.10.3 Pseudo-range correction parameters shall be as follows:

Modified Z-count: as defined in 3.6.4.2.3.

Additional message flag: as defined in 3.6.4.2.3 except applicable to Type 101 messages.

Number of measurements: as defined in 3.6.4.2.3.

Measurement type: as defined in 3.6.4.2.3.

E*phemeris decorrelation parameter (P)*: as defined in 3.6.4.2.3.

Ephemeris CRC: as defined in 3.6.4.2.3.

Source availability duration: as defined in 3.6.4.2.3.

Number of B parameters: an indication of whether the B parameters are included in the measurement block for each ranging source.

Coding: 0 = B parameters are not included
1 = 4 B parameters per measurement block

3.6.4.10.4 The measurement block parameters shall be as follows:

Ranging source ID: as defined in 3.6.4.2.4.

Issue of data (IOD): as defined in 3.6.4.2.4.

Pseudo-range correction (PRC): as defined in 3.6.4.2.4.

Range rate correction (RRC): as defined in 3.6.4.2.4.

σ_{pr_gnd}: as defined in 3.6.4.2.4, with the exception of the range of values and resolution.

B1 through B4: as defined in 3.6.4.2.4.

Note.— Inclusion of the B parameters in the measurement block is optional for Type 101 messages.

3.6.4.11 *TYPE 11 MESSAGE – PSEUDO-RANGE CORRECTIONS – 30-SECOND SMOOTHED PSEUDO-RANGES*

3.6.4.11.1 The Type 11 message shall provide the differential correction data for individual GNSS ranging sources (Table B-140) with 30-second carrier-smoothing applied. The message shall contain three sections:

a) message information (time of validity, additional message flag, number of measurements and the measurement type);

b) low-frequency information (ephemeris decorrelation parameter); and

c) satellite data measurement blocks.

Note.— Transmission of the low-frequency data for SBAS ranging sources is optional.

3.6.4.11.2 Each Type 11 message shall include the ephemeris decorrelation parameter for one satellite ranging source. The ephemeris decorrelation parameter shall apply to the first ranging source in the message.

Note.— The ephemeris CRC and source availability duration parameters are not included in the Type 11 message because they are provided in the Type 1 message.

3.6.4.11.3 Pseudo-range correction parameters for the Type 11 message shall be as follows:

Modified Z-count: as defined in 3.6.4.2.3.

Additional message flag: an identification of whether the set of measurement blocks in a single frame for a particular measurement type is contained in a single Type 11 message or a linked pair of messages.

Coding: 0 = All measurement blocks for a particular measurement type are contained in one Type 11 message.
1 = This is the first transmitted message of a linked pair of Type 11 messages that together contain the set of all measurement blocks for a particular measurement type.
2 = Spare
3 = This is the second transmitted message of a linked pair of Type 11 messages that together contain the set of all measurement blocks for a particular measurement type.

Number of measurements: the number of measurement blocks in the message.

Measurement type: as defined in 3.6.4.2.3.

Ephemeris decorrelation parameter D (P_D): a parameter that characterizes the impact of residual ephemeris errors due to decorrelation for the first measurement block in the message.

Note.— This parameter, P_D, may be different than the ephemeris decorrelation parameter P provided in the Type 1 message. Additional information regarding the difference in these parameters is given in Attachment D, 7.5.6.1.3 and 7.5.6.1.4.

For an SBAS geostationary satellite, the ephemeris decorrelation parameter, if transmitted, shall be coded as all zeros.

3.6.4.11.4 The measurement block parameters shall be as follows:

Ranging source ID: as defined in 3.6.4.2.3.

Pseudo-range correction (PRC_{30}): the correction to the ranging source pseudo-range based on 30-second carrier-smoothing.

Range rate correction (RRC_{30}): the rate of change of the pseudo-range correction based on 30-second carrier-smoothing.

Sigma_PR_gnd_D ($\sigma_{pr\_gnd\_D}$): the standard deviation of a normal distribution associated with the signal in-space contribution of the pseudo-range error in the 100-second smoothed correction in the Type 1 message at the GBAS reference point (3.6.5.5.1 and 3.6.7.2.2.4).

Note.— The parameter $\sigma_{pr\_gnd\_D}$ differs from σ_{pr_gnd} for the corresponding measurement in the Type 1 message in that $\sigma_{pr\_gnd\_D}$ should include no inflation to address overbounding of decorrelated ionospheric errors.

Coding: 1111 1111 = Ranging source correction invalid.

Sigma_PR_gnd_30 ($\sigma_{pr\_gnd\_30}$): the standard deviation of a normal distribution that describes the nominal accuracy of corrected pseudo-range smoothed with a time constant of 30 seconds at the GBAS reference point.

Note.— The normal distribution N(0, $\sigma_{pr\_gnd\_30}$) is intended to be an appropriate description of the errors to be used in optimizing the weighting used in a weighted least-squares-position solution. The distribution need not bound the errors as described in 3.6.5.5.1 and 3.6.7.2.2.4.

Coding: 1111 1111 = Ranging source correction invalid.

3.6.5 DEFINITIONS OF PROTOCOLS FOR DATA APPLICATION

Note.— This section defines the inter-relationships of the data broadcast message parameters. It provides definitions of parameters that are not transmitted, but are used by either or both non-aircraft and aircraft elements, and that define terms applied to determine the navigation solution and its integrity.

3.6.5.1 *Measured and carrier smoothed pseudo-range*. The broadcast correction is applicable to carrier smoothed code pseudo-range measurements that have not had the satellite broadcast troposphere and ionosphere corrections applied to them. The carrier smoothing is defined by the following filter:

$$P_{CSCn} = \alpha P + (1 - \alpha)\left(P_{CSC_{n-1}} + \frac{\lambda}{2\pi}(\phi_n - \phi_{n-1})\right)$$

where

P_{CSCn} = the smoothed pseudo-range;
$P_{CSCn–1}$ = the previous smoothed pseudo-range;
P = the raw pseudo-range measurement where the raw pseudo-range measurements are obtained from a carrier driven code loop, first order or higher and with a one-sided noise bandwidth greater than or equal to 0.125 Hz;
λ = the L1 wavelength;
ϕ_n = the carrier phase;
$\phi_{n–1}$ = the previous carrier phase; and
α = the filter weighting function equal to the sample interval divided by the smoothing time constant. For GBAS pseudo-range corrections in message Type 1 and message Type 101, the smoothing time constant is 100 seconds, except as specified in 3.6.8.3.5.1 for airborne equipment. For GBAS pseudo-range corrections in message Type 11, the smoothing time constant is 30 seconds.

3.6.5.2 *Corrected pseudo-range*. The corrected pseudo-range for a given satellite at time *t* is:

$$PR_{corrected} = P_{CSC} + PRC + RRC \times (t - tz - count) + TC + c \times (\Delta t_{sv})_{L1}$$

where

P_{CSC} = the smoothed pseudo-range (defined in 3.6.5.1);
PRC = the pseudo-range correction from the appropriate message:
a) for 100-second smoothed pseudo-ranges, PRC is taken from message Type 1 or Type 101 defined in 3.6.4.2; and
b) for 30-second smoothed pseudo-ranges, PRC is PRC30 taken from message Type 11 defined in 3.6.4.11;
RRC = the pseudo-range correction rate from the appropriate message:
a) for 100-second smoothed pseudo-ranges, RRC is taken from message Type 1 or Type 101 defined in 3.6.4.2; and
b) for 30-second smoothed pseudo-ranges, RRC is RRC30 taken from message Type 11 defined in 3.6.4.11;
t = the current time;
tz-count = the time of applicability derived from the modified Z-count of the message containing PRC and RRC;
TC = the tropospheric correction (defined in 3.6.5.3); and
c and $(\Delta t_{sv})_{L1}$ are as defined in 3.1.2.2 for GPS satellites.

3.6.5.3 *TROPOSPHERIC DELAY*

3.6.5.3.1 The tropospheric correction for a given satellite is:

$$TC = N_r h_0 \frac{10^{-6}}{\sqrt{0.002 + \sin^2(El_i)}}(1 - e^{-\Delta h/h_0})$$

where

N_r = refractivity index from the Type 2 message (3.6.4.3);
Δ_h = height of the aircraft above the GBAS reference point;
El_i = elevation angle of the ith satellite; and
h_0 = troposphere scale height from the Type 2 message.

3.6.5.3.2 The residual tropospheric uncertainty is:

$$\sigma_{tropo} = \sigma_n h_0 \frac{10^{-6}}{\sqrt{0.002 + \sin^2(El_i)}}(1 - e^{-\Delta h/h_0})$$

where σ_n = the refractivity uncertainty from the Type 2 message (3.6.4.3).

3.6.5.4 *Residual ionospheric uncertainty*. The residual ionospheric uncertainty for a given satellite is:

$$\sigma_{iono} = F_{pp} \times \sigma_{vig} \times (x_{air} + 2 \times \tau \times v_{air})$$

where

F_{pp} = the vertical-to-slant obliquity factor for a given satellite (3.5.5.5.2);
σ_{vig} = is dependent on the active GAST.
For GAST A, B or C, $\sigma_{vig} = \sigma_{vert\_iono\_gradient}$ (as defined in 3.6.4.3);
For GAST D, $\sigma_{vig} = \sigma_{vert\_iono\_gradient\_D}$ (as defined in 3.6.4.3.2.2);
x_{air} = the distance (slant range) in metres between current aircraft location and the GBAS reference point indicated in the Type 2 message;
τ = is dependent on the active GAST.
For GAST A, B or C, τ =100 seconds (time constant used in 3.6.5.1); and
For GAST D, the value of τ depends on whether σ_{iono} is applied in measurement weighting or in integrity bounding. τ = 100 seconds when σ_{iono} is used for integrity bounding (per 3.6.5.5.1.1.1) and τ = 30 seconds when σ_{iono} is used for measurement weighting (per 3.6.5.5.1.1.2);
v_{air} = the aircraft horizontal approach velocity (metres per second).

3.6.5.5 *PROTECTION LEVELS*

3.6.5.5.1 *Protection levels for all GBAS approach service types*. The signal-in-space vertical and lateral protection levels (VPL and LPL) are upper confidence bounds on the error in the position relative to the GBAS reference point defined as:

$$VPL = MAX\{VPL_{HO}, VPL_{H1}\}$$

$$LPL = MAX\{LPL_{HO}, LPL_{H1}\}$$

3.6.5.5.1.1 *Normal measurement conditions*

3.6.5.5.1.1.1 The vertical protection level (VPL_{H0}) and lateral protection level (LPL_{H0}), assuming that normal measurement conditions (i.e. no faults) exist in all reference receivers and on all ranging sources, is calculated as:

$$VPL_{H0} = K_{ffmd}\sigma_{vert} + D_V$$

$$LPL_{H0} = K_{ffmd}\sigma_{lat} + D_L$$

where

$$\sigma_{vert} = \sqrt{\sum_{i=1}^{N} s\_vert_i^2 \times \sigma_i^2}$$

$$\sigma_{lat} = \sqrt{\sum_{i=1}^{N} s\_lat_i^2 \times \sigma_i^2}$$

$\sigma^2_i = \sigma^2_{pr\_gnd,i} + \sigma^2_{tropo,i} + \sigma^2_{pr\_air,i} + \sigma^2_{iono,i}$;

and

$\sigma_{pr\_gnd,i}$ is dependent on the active GAST.
For GAST A, B or C: $\sigma_{pr\_gnd,i} = \sigma_{pr\_gnd}$ for the ith ranging source as defined in 3.6.4.2;
For GAST D: $\sigma_{pr\_gnd,i} = \sigma_{pr\_gnd\_D}$ for the ith ranging source (3.6.4.11);

$\sigma^2_{tropo,i}$, $\sigma^2_{pr\_air,i}$ and $\sigma^2_{iono,i}$ are as defined in 3.6.5.5.1.1.2;

K_{ffmd} = the multiplier derived from the probability of fault-free missed detection;

s_vert_i = $s_{v,i} + s_{x,i} \times \tan(GPA)$;

s_lat_i = $s_{y,i}$;

$s_{x,i}$ = the partial derivative of position error in the x-direction with respect to pseudo-range error on the ith satellite;

$s_{y,i}$ = the partial derivative of position error in the y-direction with respect to pseudo-range error on the ith satellite;

$s_{v,i}$ = the partial derivative of position error in the vertical direction with respect to pseudo-range error on the ith satellite;

GPA = the glidepath angle for the final approach path (3.6.4.5.1);

N = the number of ranging sources used in the position solution; and

i = the ranging source index for ranging sources used in the position solution;

D_V = an airborne determined parameter depending on the active GAST.
For GAST A, B or C: $D_V = 0$;
For GAST D: D_V is calculated as the magnitude of the vertical projection of the difference between the 30-second and 100-second position solutions;

D_L = an airborne determined parameter depending on the active GAST.
For GAST A, B or C: $D_L = 0$;
For GAST D: D_L is calculated as the magnitude of the lateral projection of the difference between the 30-second and 100-second position solutions.

Note 1.— The airborne 30-second and 100-second position solutions, D_V and D_L are defined in RTCA MOPS DO-253D.

Note 2.— The coordinate reference frame is defined such that x is along track positive forward, y is crosstrack positive left in the local level tangent plane and v is the positive up and orthogonal to x and y.

3.6.5.5.1.1.2 For a general-least-squares position solution, the projection matrix S is defined as:

$$S \equiv \begin{bmatrix} S_{x,1} & S_{x,2} & \cdots & S_{x,N} \\ S_{y,1} & S_{y,2} & \cdots & S_{y,N} \\ S_{v,1} & S_{v,2} & \cdots & S_{v,N} \\ S_{t,1} & S_{t,2} & \cdots & S_{t,N} \end{bmatrix} = (G^T \times W \times G)^{-1} \times G^T \times W$$

where

G_i = $[-\cos El_i \cos Az_i \; -\cos El_i \sin Az_i \; -\sin El_i \; 1]$ = i^{th} row of G; and

$$W = \begin{bmatrix} \sigma_{w,1}^2 & 0 & \ldots & 0 \\ 0 & \sigma_{w,2}^2 & \ldots & 0 \\ \vdots & \vdots & \ddots & \vdots \\ 0 & 0 & \ldots & \sigma_{w,N}^2 \end{bmatrix}^{-1}$$

where $\sigma^2_{w,i} = \sigma^2_{pr\_gnd,i} + \sigma^2_{tropo,i} + \sigma^2_{pr\_air,i} + \sigma^2_{iono,i}$;

where

$\sigma_{pr\_gnd,i}$ = is dependent on the active GAST.
For GAST A, B or C or the GBAS positioning service: $\sigma_{pr\_gnd,i} = \sigma_{pr\_gnd}$ for the ith ranging source as defined in (3.6.4.2);
For GAST D: $\sigma_{pr\_gnd,i} = \sigma_{pr\_gnd\_30}$ for the ith ranging source (3.6.4.11);

$\sigma_{tropo,i}$ = the residual tropospheric uncertainty for the ith ranging source (3.6.5.3);

$\sigma_{iono,i}$ = the residual ionospheric delay (due to spatial decorrelation) uncertainty for the ith ranging source (3.6.5.4); and

$\sigma_{pr\_air,i}$ = $\sqrt{\sigma^2_{receiver}(El_i) + \sigma^2_{multipath}(El_i)}$, the standard deviation of the aircraft contribution to the corrected pseudo range error for the ith ranging source. The total aircraft contribution includes the receiver contribution (3.6.8.2.1) and a standard allowance for airframe multipath;

where

$\sigma_{multipath}(El_i)$ = $0.13 + 0.53e^{-El_i/10\ deg}$, the standard model for the contribution of airframe multipath (in metres);

El_i = the elevation angle for the ith ranging source (in degrees); and

Az_i = the azimuth for the ith ranging source taken counterclockwise for the x axis (in degrees).

Note.— To improve readability, the subscript i was omitted from the projection matrix's equation.

3.6.5.5.1.2 *Faulted measurement conditions*. When the Type 101 message is broadcast without B parameter blocks, the values for VPL_{H1} and LPL_{H1} are defined as zero. Otherwise, the vertical protection level (VPL_{H1}) and lateral protection level (LPL_{H1}), assuming that a latent fault exists in one, and only one reference receiver, are:

$$VPL_{H1} = \max [VPL_j] + D_V$$

$$LPL_{H1} = \max [LPL_j] + D_L$$

where VPL_j and LPL_j for j = 1 to 4 are

VPL_j = $|B\_vert_j| + K_{md}\,\sigma_{vert,H1}$; and
LPL_j = $|B\_lat_j| + K_{md}\,\sigma_{lat,H1}$;
D_V = an airborne determined parameter depending on the active GAST (3.6.5.5.1.1.1);
D_L = an airborne determined parameter depending on the active GAST (3.6.5.5.1.1.1);

and

B_vert_j = $\sum_{i=1}^{N}(s\_vert_i \times B_{i,j})$;
B_lat_j = $\sum_{i=1}^{N}(s\_lat_i \times B_{i,j})$;
$B_{i,j}$ = the broadcast differences between the broadcast pseudo-range corrections and the corrections obtained excluding the jth reference receiver measurement for the ith ranging source;
K_{md} = the multiplier derived from the probability of missed detection given that the ground subsystem is faulted;
$\sigma^2_{vert,H1}$ = $\sum_{i=1}^{N}(s\_vert_i^2 \times \sigma\_H1_i^2)$;
$\sigma^2_{lat,H1}$ = $\sum_{i=1}^{N}(s\_lat_i^2 \times \sigma\_H1_i^2)$;
$\sigma\_H1^2_i$ = $\left(\frac{M_i}{U_i}\right)\sigma^2_{pr\_gnd,i} + \sigma^2_{pr\_air,i} + \sigma^2_{tropo,i} + \sigma^2_{iono,i}$;
$\sigma_{pr\_gnd,i}$ is dependent on the active GAST.
For GAST A, B or C: $\sigma_{pr\_gnd,i} = \sigma_{pr\_gnd}$ for the ith ranging source as defined in (3.6.4.2);
For GAST D: $\sigma_{pr\_gnd,i} = \sigma_{pr\_gnd\_D}$ for the ith ranging source (3.6.4.11);
$\sigma^2_{tropo,i}$, $\sigma^2_{pr\_air,i}$ and $\sigma^2_{iono,i}$ are as defined in 3.6.5.5.1.1.2;
M_i = the number of reference receivers used to compute the pseudo-range corrections for the *i^{th}* ranging source (indicated by the B values); and
U_i = the number of reference receivers used to compute the pseudo-range corrections for the *i^{th}* ranging source, excluding the jth reference receiver.

Note.— A latent fault includes any erroneous measurement(s) that is not immediately detected by the ground subsystem, such that the broadcast data are affected and there is an induced position error in the aircraft subsystem.

3.6.5.5.1.3 Definition of K multipliers for GBAS approach services. The multipliers are given in Table B-135.

Table B-135. K-multipliers for GBAS approach services

	M_i			
Multiplier	*1 (Note)*	*2*	*3*	*4*
K_{ffmd}	6.86	5.762	5.81	5.847
K_{md}	Not used	2.935	2.898	2.878

Note.— For GAST A supported by Type 101 messages broadcast without the B parameter block.

3.6.5.5.2 *GBAS positioning service*. The signal-in-space horizontal protection level is an upper confidence bound on the horizontal error in the position relative to the GBAS reference point defined as:

$$HPL = MAX\{HPL_{H0}, HPL_{H1}, HEB\}$$

3.6.5.5.2.1 *Normal measurements conditions*. The horizontal protection level (HPL_{H0}), assuming that normal measurement conditions (i.e. no faults) exist in all reference receivers and on all ranging sources, is calculated as:

$$HPL_{H0} = K_{ffmd,\,POS} {}^{d}_{major}$$

where:

$$d_{major} = \sqrt{\frac{d_x^2 + d_y^2}{2} + \sqrt{\left(\frac{d_x^2 - d_y^2}{2}\right)^2 + d_{xy}^2}}$$

$$d_x^2 = \sum_{i=1}^{N} s_{x,i}^2 \sigma_i^2$$

$$d_y^2 = \sum_{i=1}^{N} s_{y,i}^2 \sigma_i^2$$

$$d_{xy} = \sum_{i=1}^{N} s_{x,i} s_{y,i} \sigma_i^2$$

$s_{x,i}$ = the partial derivative of position error in the x-direction with respect to pseudo-range error on the ith satellite
$s_{y,i}$ = the partial derivative of position error in the y-direction with respect to pseudo-range error on the ith satellite
$K_{ffmd,POS}$ = the multiplier derived from the probability of fault-free missed detection
N = the number of ranging sources used in the position solution
i = the ranging source index for ranging sources used in the position solution
σ_i = the pseudo-range error term as defined in 3.6.5.5.1.1

Note.— For the GBAS positioning service, the x and y axes define an arbitrary orthogonal basis in the horizontal plane.

3.6.5.5.2.2 *Faulted measurement conditions*. When the Type 101 message is broadcast without B parameter blocks, the value for HPL_{H1} is defined as zero. Otherwise, the horizontal protection level (HPL_{H1}), assuming that a latent fault exists in one and only one reference receiver, is:

$$HPL_{H1} = \max\,[HPL_j]$$

where HPL_j for j = 1 to 4 is:

$$HPL_j = |B\_horz_j| + K_{md\_POS} d_{major,H1}$$

and

$$B\_horz_j = \sqrt{\left(\sum_{i=1}^{N} S_{x,i} B_{i,j}\right)^2 + \left(\sum_{i=1}^{N} S_{y,i} B_{i,j}\right)^2}$$

$B_{i,j}$ = the broadcast differences between the broadcast pseudo-range corrections and the corrections obtained excluding the jth reference receiver measurement for the ith ranging source.

K_{md_POS} = the multiplier derived from the probability of missed detection given that the ground subsystem is faulted.

$$d_{major,H1} = \sqrt{\frac{d\_H1_x^2 + d\_H1_y^2}{2} + \sqrt{\left(\frac{d\_H1_x^2 - d\_H1_y^2}{2}\right)^2 + d\_H1_{xy}^2}}$$

$$d\_H1_x^2 = \sum_{i=1}^{N} s_{x,i}^2 \sigma\_H1_i^2$$

$$d\_H1_y^2 = \sum_{i=1}^{N} s_{y,i}^2 \sigma\_H1_i^2$$

$$d\_H1_{xy} = \sum_{i=1}^{N} s_{x,i} s_{y,i} \sigma\_H1_i^2$$

Note.— For the GBAS positioning service, the x and y axes define an arbitrary orthogonal basis in the horizontal plane.

$$\sigma\_H1_i^2 = \left(\frac{M_i}{U_i}\right) \sigma_{pr\_gnd,i}^2 + \sigma_{pr\_air,i}^2 + \sigma_{tropo,i}^2 + \sigma_{iono,i}^2$$

M_i = the number of reference receivers used to compute the pseudo-range corrections for the ith ranging source (indicated by the B values).

U_i = the number of reference receivers used to compute the pseudo-range corrections for the ith ranging source, excluding the jth reference receiver.

Note.— A latent fault includes any erroneous measurement(s) that is not immediately detected by the ground subsystem, such that the broadcast data are affected and there is an induced position error in the aircraft subsystem.

3.6.5.5.2.3 *Definition of K multipliers for GBAS positioning service*. The multiplier K_{ffmd_POS} is equal to 10.0 and the multiplier K_{md_POS}, is equal to 5.3.

3.6.5.6 *ALERT LIMITS*

Note 1.— Guidance concerning the calculation of alert limits, including approaches associated with channel numbers 40 000 to 99 999, is provided in Attachment D, 7.13.

Note 2. — Computation of alert limits depends on the active service type.

3.6.5.6.1 *GAST C and D alert limits*. The alert limits are defined in Tables B-136 and B-137. For aircraft positions at which the lateral deviation exceeds twice the deviation at which full-scale lateral deflection of a course deviation indicator is achieved, or vertical deviation exceeds twice the deviation at which full-scale fly-down deflection of a course deviation indicator is achieved, both the lateral and vertical alert limits are set to the maximum values given in the tables.

3.6.5.6.2 *GAST A and B alert limits*. The alert limits are equal to the FASLAL and FASVAL taken from the Type 4 message for approaches with channel numbers in the range of 20 001 to 39 999. For approaches with channel numbers in the range 40 000 to 99 999, the alert limits are stored in the on-board database.

3.6.5.7 *Channel number*. Each GBAS approach transmitted from the ground subsystem is associated with a channel number in the range of 20 001 to 39 999. If provided, the GBAS positioning service is associated with a separate channel number in the range of 20 001 to 39 999. The channel number is given by:

$$\text{Channel number} = 20\,000 + 40(F - 108.0) + 411(S)$$

where

F = the data broadcast frequency (MHz)
S = RPDS or RSDS

and

RPDS = the reference path data selector for the FAS data block (as defined in 3.6.4.5.1)
RSDS = the reference station data selector for the GBAS ground subsystem (as defined in 3.6.4.3.1)

Table B-136. GAST C and D lateral alert limit

Horizontal distance of aircraft position from the LTP/FTP as translated along the final approach path (metres)	Lateral alert limit (metres)
$D \leq 873$	FASLAL
$873 < D \leq 7\,500$	0.0044D (m) + FASLAL – 3.85
$D > 7\,500$	FASLAL + 29.15

Table B-137. GAST C and D vertical alert limit

Height above LTP/FTP of aircraft position translated onto the final approach path (feet)	Vertical alert limit (metres)
H ≤ 200	FASVAL
200 < H ≤ 1 340	0.02925H (ft) + FASVAL − 5.85
H > 1 340	FASVAL + 33.35

For channel numbers transmitted in the additional data block 2 of Type 2 message (as defined in 3.6.4.3.2.1), only RSDS are used.

Note 1.— When the FAS is not broadcast for an approach supported by GAST A or B, the GBAS approach is associated with a channel number in the range 40 000 to 99 999.

Note 2.— Guidance material concerning channel number selection is provided in Attachment D, 7.7.

3.6.5.8 *EPHEMERIS ERROR POSITION BOUND*

Note.— Ephemeris error position bounds are computed only for core satellite constellation ranging sources used in the position solution (j index) and not for other types of ranging sources (SBAS satellites or pseudolites) that are not subject to undetected ephemeris failures. However, the calculations of these position bounds use information from all ranging sources used in the position solution (i index).

3.6.5.8.1 *GBAS approach*. The vertical and lateral ephemeris error position bounds are defined as:

$$VEB = \max_{j}\{VEB_j\} + D_V$$

$$LEB = \max_{j}\{LEBj\} + D_L$$

The vertical and lateral ephemeris error position bounds for the jth core satellite constellation ranging source used in the position solution are given by:

$$VEB_j = \left|s\_vert_j\right| x_{air} P_{ej} + K_{md\_ej} \sqrt{\sum_{i=1}^{N} s\_vert_i^2 \times \sigma_i^2}$$

$$LEB_j = \left|s\_lat_j\right| x_{air} P_{ej} + K_{md\_ej} \sqrt{\sum_{i=1}^{N} s\_lat_i^2 \times \sigma_i^2}$$

where:

D_V = an airborne determined parameter depending on the active GAST (3.6.5.5.1.1.1);
D_L = an airborne determined parameter depending on the active GAST (3.6.5.5.1.1.1);
$s\_vert_{i \text{ or } j}$ is defined in 3.6.5.5.1.1;

$s\_lat_{i \text{ or } j}$ is defined in 3.6.5.5.1.1;
x_{air} is defined in 3.6.5.4;
N is the number of ranging sources used in the position solution;
σ_i is defined in 3.6.5.5.1.1;
P_{ej} is the broadcast ephemeris decorrelation parameter for the jth ranging source. The source of this parameter depends on the active GBAS approach service type:
GAST A, B or C: P_{ej} = P from the Type 1 or Type 101 Message corresponding to the jth ranging source. (3.6.4.2.3);
GAST D: $P_{ej} = P_D$ from the Type 11 Message corresponding to the jth ranging source (3.6.4.11.3);
$K_{md\_e,j}$ is the broadcast ephemeris missed detection multiplier for GAST A-C associated with the satellite constellation for the jth ranging source. The source of this parameter depends on the active GBAS approach service type:
GAST A, B or C: $K_{md\_e,j} = K_{md\_e,GPS}$ or $K_{md\_e,GLONASS}$ as obtained from the Type 2 Message Additional Data block 1 (3.6.4.3.1);
GAST D: $K_{md\_e,j} = K_{md\_e\_D,GPS}$ or $K_{md\_e\_D,GLONASS}$ as obtained from the Type 2 Message Additional Data block 3 (3.6.4.3.2.2).

3.6.5.8.2 GBAS positioning service. The horizontal ephemeris error position bound is defined as:

$$HEB = \underset{j}{MAX}\{HEB_j\}$$

The horizontal ephemeris error position bound for the jth core satellite constellation ranging source used in the position solution is given by:

$$HEB_j = |s_{horz,j}|\, x_{air}\, P_j + K_{md\_e\_POS}\, d_{major}$$

where:

$s_{horz,j}^2 = s_{xj}^2 + s_{yj}^2$
$s_{x,j}$ is as defined in 3.6.5.5.2.1
$s_{y,j}$ is as defined in 3.6.5.5.2.1
x_{air} is defined in 3.6.5.4
P_j is the broadcast ephemeris decorrelation parameter for the jth ranging source. The source of this parameter does not depend on the active GBAS approach service type. In all cases, P_j=P from the Type 1 or Type 101 Message (3.6.4.2.3) corresponding to the jth ranging source.
$K_{md\_e\_POS}$ is the broadcast ephemeris missed detection multiplier for the GBAS positioning service associated with the satellite constellation for the jth ranging source ($K_{md\_e\_POS,GPS}$ or $K_{md\_e\_POS,GLONASS}$)
d_{major} is as defined in 3.6.5.5.2.1

3.6.5.9 *Ionospheric gradient error*

The maximum undetected 30-second smoothed corrected pseudo-range error due to an ionospheric gradient (EIG) is calculated based on the broadcast parameters YEIG and MEIG, as:

$$E_{IG} = Y_{EIG} + M_{EIG} \times D_{EIG}$$

where

Y_{EIG} = maximum value of E_{IG} (metres) in the Type 2 message;

M_{EIG} = slope of maximum E_{IG} (m/km) in the Type 2 message;
D_{EIG} = the distance in kilometres between the LTP location for the selected approach broadcast in the Type 4 Message and the GBAS reference point in the Type 2 message.

3.6.6 MESSAGE TABLES

Each GBAS message shall be coded in accordance with the corresponding message format defined in Tables B-138 through B-144.

Note.— Message type structure is defined in 3.6.4.1.

Table B-138. Type 1 pseudo-range corrections message

Data content	*Bits used*	*Range of values*	*Resolution*
Modified Z-count	14	0 to 1 199.9 s	0.1 s
Additional message flag	2	0 to 3	1
Number of measurements (N)	5	0 to 18	1
Measurement type	3	0 to 7	1
Ephemeris decorrelation parameter (P)	8	0 to 1.275×10^{-3} m/m	5×10^{-6} m/m
Ephemeris CRC	16	—	—
Source availability duration	8	0 to 2 540 s	10 s
For N measurement blocks			
Ranging source ID	8	1 to 255	1
Issue of data (IOD)	8	0 to 255	1
Pseudo-range correction (PRC)	16	±327.67 m	0.01 m
Range rate correction (RRC)	16	±32.767 m/s	0.001 m/s
σ_{pr_gnd}	8	0 to 5.08 m	0.02 m
B_1	8	±6.35 m	0.05 m
B_2	8	±6.35 m	0.05 m
B_3	8	±6.35 m	0.05 m
B_4	8	±6.35 m	0.05 m

Table B-139. Type 101 GRAS pseudo-range corrections message

Data content	*Bits used*	*Range of values*	*Resolution*
Modified Z-count	14	0 to 1 199.9 s	0.1 s
Additional message flag	2	0 to 3	1
Number of measurements (N)	5	0 to 18	1
Measurement type	3	0 to 7	1
Ephemeris decorrelation parameter (P)	8	0 to 1.275×10^{-3} m/m	5×10^{-6} m/m
Ephemeris CRC	16	—	—
Source availability duration	8	0 to 2540 s	10 s
Number of B parameters	1	0 or 4	—
Spare	7	—	—
For N measurement blocks			
Ranging source ID	8	1 to 255	1
Issue of data (IOD)	8	0 to 255	1
Pseudo-range correction (PRC)	16	±327.67 m	0.01 m
Range rate correction (RRC)	16	±32.767 m/s	0.001 m/s
σ_{pr_gnd}	8	0 to 50.8 m	0.2 m
B parameter block (if provided)			
B_1	8	±25.4 m	0.2 m
B_2	8	±25.4 m	0.2 m
B_3	8	±25.4 m	0.2 m
B_4	8	±25.4 m	0.2 m

Table B-140. Type 11 pseudo-range corrections (30-second smoothed pseudo-ranges) message

Data content	*Bits used*	*Range of values*	*Resolution*
Modified Z-count	14	0 – 1199.9 sec	0.1 sec
Additional message flag	2	0 – 3	1
Number of measurements	5	0 – 18	1
Measurement type	3	0 – 7	1
Ephemeris decorrelation parameter D (P_D) (Notes 1, 3)	8	0 – 1.275×10^{-3} m/m	5×10^{-6} m/m
For N measurement blocks:			
Ranging source ID	8	1 – 255	1
Pseudo-range correction (PRC_{30})	16	±327.67 m	0.01 m
Range rate correction (RRC_{30})	16	±32.767 m/s	0.001 m/s
Sigma_PR_gnd_D ($\sigma_{pr\_gnd\_D}$) (Note 2)	8	0 – 5.08 m	0.02 m
Sigma_PR_gnd_30 ($\sigma_{pr\_gnd\_30}$) (Note 2)	8	0 – 5.08 m	0.02 m

Notes:
1. *For SBAS satellites, the parameter is set to all zeros.*
2. *1111 1111 indicates the source is invalid.*
3. *Parameter is associated with the first transmitted measurement block.*

Table B-141. Type 2 GBAS-related data message

Data content	*Bits used*	*Range of values*	*Resolution*
GBAS reference receivers	2	2 to 4	—
Ground accuracy designator letter	2	—	—
Spare	1	—	—
GBAS continuity/integrity designator	3	0 to 7	1
Local magnetic variation	11	±180°	0.25°
Reserved and set to zero (00000)	5	—	—
$\sigma_{vert\_iono\_gradient}$	8	0 to 25.5 × 10^{-6} m/m	0.1 × 10^{-6} m/m
Refractivity index	8	16 to 781	3
Scale height	8	0 to 25 500 m	100 m
Refractivity uncertainty	8	0 to 255	1
Latitude	32	±90.0°	0.0005 arcsec
Longitude	32	±180.0°	0.0005 arcsec
GBAS reference point height	24	±83 886.07 m	0.01 m
Additional data block 1 (if provided)			
Reference station data selector	8	0 to 48	1
Maximum use distance (D_{max})	8	2 to 510 km	2 km
$K_{md\_e\_POS,GPS}$	8	0 to 12.75	0.05
$K_{md\_e,GPS}$	8	0 to 12.75	0.05
$K_{md\_e\_POS,GLONASS}$	8	0 to 12.75	0.05
$K_{md\_e,GLONASS}$	8	0 to 12.75	0.05
Additional data blocks (repeated for all provided)			
Additional data block length	8	2 to 255	1
Additional data block number	8	2 to 255	1
Additional data parameters	Variable	—	—

Note.— Multiple additional data blocks may be appended to a Type 2 message.

Table B-142. Type 3 null message

Data content	*Bits used*	*Range of values*	*Resolution*
Filler	Variable (Note)	N/A	N/A

Note.— The number of bytes in the filler field is 10 less than the message length field in the message header as defined in 3.6.3.4.

Table B-143. Type 4 FAS data message

Data content	*Bits used*	*Range of values*	*Resolution*
For N data sets			
Data set length	8	2 to 212	1 byte
FAS data block	304	—	—
FAS vertical alert limit/approach status	8		
(1) when associated approach performance designator (APD) is coded as 0		0 to 50.8 m	0.2 m
(2) when associated approach performance designator(APD) is not coded as 0		0 to 25.4 m	0.1 m
FAS lateral alert limit/approach status	8	0 to 50.8 m	0.2 m

Table B-144. Type 5 predicted ranging source availability message

Data content	*Bits used*	*Range of values*	*Resolution*
Modified Z-count	14	0 to 1 199.9 s	0.1 s
Spare	2	—	—
Number of impacted sources (N)	8	0 to 31	1
For N impacted sources			
Ranging source ID	8	1 to 255	1
Source availability sense	1	—	—
Source availability duration	7	0 to 1 270 s	10 s
Number of obstructed approaches (A)	8	0 to 255	1
For A obstructed approaches			
Reference path data selector	8	0 to 48	—
Number of impacted sources for this approach (N_A)	8	1 to 31	1
For N_A impacted ranging sources for this approach			
Ranging source ID	8	1 to 255	1
Source availability sense	1	—	—
Source availability duration	7	0 to 1 270 s	10 s

3.6.7 NON-AIRCRAFT ELEMENTS

3.6.7.1 *PERFORMANCE*

3.6.7.1.1 *Accuracy*

3.6.7.1.1.1 The root-mean-square (RMS) (1 sigma) of the ground subsystem contribution to the corrected 100-second smoothed pseudo-range accuracy for GPS and GLONASS satellites shall be:

$$\mathrm{RMS}_{\mathrm{pr\_gnd}} \leq \sqrt{\frac{(a_0 + a_1 e^{-\theta_n/\theta_0})^2}{M} + (a_2)^2}$$

where

M = the number of GNSS reference receivers, as indicated in the Type 2 message parameter (3.6.4.3), or, when this parameter is coded to indicate “not applicable”, the value of M is defined as 1;
n = nth ranging source;
θ_n = elevation angle for the nth ranging source; and
a_0, a_1, a_2, and θ_0 = parameters defined in Tables B-72 and B-73 for each of the defined ground accuracy designators (GADs).

Note 1.— The GBAS ground subsystem accuracy requirement is determined by the GAD letter and the number of reference receivers.

Note 2.— The ground subsystem contribution to the corrected 100-second smoothed pseudo-range error specified by the curves defined in Tables B-72 and B-73 and the contribution to the SBAS satellites do not include aircraft noise and aircraft multipath.

Table B-145. GBAS — GPS accuracy requirement parameters

Ground accuracy designator letter	θ_n *(degrees)*	a_0 *(metres)*	a_1 *(metres)*	θ_0 *(degrees)*	a_2 *(metres)*
A	≥ 5	0.5	1.65	14.3	0.08
B	≥ 5	0.16	1.07	15.5	0.08
C	> 35	0.15	0.84	15.5	0.04
	5 to 35	0.24	0	—	0.04

Table B-146. GBAS — GLONASS accuracy requirement parameters

Ground accuracy designator letter	θ_n *(degrees)*	a_0 *(metres)*	a_1 *(metres)*	θ_0 *(degrees)*	a_2 *(metres)*
A	≥ 5	1.58	5.18	14.3	0.078
B	≥ 5	0.3	2.12	15.5	0.078
C	> 35	0.3	1.68	15.5	0.042
	5 to 35	0.48	0	—	0.042

3.6.7.1.1.2 The RMS of the ground subsystem contribution to the corrected 100-second smoothed pseudo-range accuracy for SBAS satellites shall be:

$$\mathrm{RMS}_{\mathrm{pr\_gnd}} \leq \frac{1.8}{\sqrt{\mathrm{M}}}(\mathrm{metres})$$

where M is as defined in 3.6.7.1.1.1.

Note.— GAD classifications for SBAS ranging sources are under development.

3.6.7.1.2 *Integrity*

3.6.7.1.2.1 *GBAS ground subsystem integrity risk*

3.6.7.1.2.1.1 *Ground subsystem integrity risk for GBAS approach services*

3.6.7.1.2.1.1.1 *Ground subsystem signal-in-space integrity risk for GBAS approach service types A, B or C*. For a GBAS ground subsystem classified as FAST A, B or C, the integrity risk shall be less than 1.5×10^{-7} per approach.

Note 1.— The integrity risk assigned to the GBAS ground subsystem is a subset of the GBAS signal-in-space integrity risk, where the protection level integrity risk (3.6.7.1.2.2.1) has been excluded and the effects of all other GBAS, SBAS and core satellite constellations failures are included. The GBAS ground subsystem integrity risk includes the integrity risk of satellite signal monitoring required in 3.6.7.3.3.

Note 2.— GBAS signal-in-space integrity risk is defined as the probability that the ground subsystem provides information which when processed by a fault-free receiver, using any GBAS data that could be used by the aircraft in the service volume, results in an out-of-tolerance lateral or vertical relative position error without annunciation for a period longer than the maximum signal-in-space time-to-alert. An out-of-tolerance lateral or vertical relative position error is defined as an error that exceeds the GBAS approach services protection level and, if additional data block 1 is broadcast, the ephemeris error position bound.

3.6.7.1.2.1.1.2 *Ground subsystem signal-in-space integrity risk for GBAS approach service type D*. For a GBAS ground subsystem classified as FAST D, the integrity risk for all effects other than errors induced by anomalous ionospheric conditions shall be less than 1.5×10^{-7} per approach.

Note 1.— The integrity risk assigned to the GBAS ground subsystem classified as FAST D is a subset of the GBAS signal-in-space integrity risk, where the protection level integrity risk (3.6.7.1.2.2.1) has been excluded and the effects of all other GBAS, SBAS and core satellite constellations failures are included.

Note 2.— For GAST D, the GBAS signal-in-space integrity risk is defined as the probability that the ground subsystem provides information which when processed by a fault-free receiver, using any GBAS data that could be used by the aircraft in the service volume, in the absence of an ionospheric anomaly, results in an out-of-tolerance lateral or vertical relative position error without annunciation, for a period longer than the maximum signal-in-space time-to-alert. An out-of-tolerance lateral or vertical relative position error is defined as an error that exceeds the GBAS approach services protection level and the ephemeris error position bound. For GAST D, out-of-tolerance conditions caused by anomalous ionospheric errors are excluded from this integrity risk as the risk due to ionospheric anomalies has been allocated to and is mitigated by the airborne segment.

3.6.7.1.2.1.1.3 *Ground subsystem integrity risk for GAST D*. For a GBAS ground subsystem classified as FAST D, the probability that the ground subsystem internally generates and transmits non-compliant information for longer than 1.5 seconds shall be less than 1×10^{-9} in any one landing.

Note 1.— This additional integrity risk requirement assigned to FAST D GBAS ground subsystems is defined in terms of the probability that internal ground subsystem faults generate non-compliant information. Non-compliant information in this context is defined in terms of the intended function of the ground subsystem to support landing operations in Category III minima. For example, non-compliant information includes any broadcast signal or broadcast information that is not monitored in accordance with the standard.

Note 2.— Environmental conditions (anomalous ionosphere, troposphere, radio frequency interference, GNSS signal multipath, etc.) are not considered faults; however, faults in ground subsystem equipment, used to monitor for or mitigate the effects of these environmental conditions, are included in this requirement. Similarly, the core satellite constellation ranging source faults are excluded from this requirement; however, the ground subsystem's capability to provide integrity monitoring for these ranging sources is included. Monitoring requirements for ranging source faults and ionosphere environmental conditions are separately specified in 3.6.7.3.3.2, 3.6.7.3.3.3 and 3.6.7.3.4.

Note 3.— Faults that occur in ground receivers used to generate the broadcast corrections are excluded from this requirement if they occur in any one, and only one, ground receiver at any time. Such faults are constrained by the requirement in 3.6.7.1.2.2.1.2 and the associated integrity risk requirements in 3.6.7.1.2.2.1 and 3.6.7.1.2.2.1.1.

3.6.7.1.2.1.2 *Ground subsystem time-to-alert for GBAS approach services*

3.6.7.1.2.1.2.1 *Maximum time-to-alert for approach services*

3.6.7.1.2.1.2.1.1 For a ground segment classified as FAST A, B, C or D, the GBAS ground subsystem maximum time-to-alert shall be less than or equal to 3 seconds for all signal-in-space integrity requirements (see Appendix B, 3.6.7.1.2.1.1.1, 3.6.7.1.2.1.1.2, 3.6.7.1.2.2.1) when Type 1 messages are broadcast.

Note 1.— The ground subsystem time-to-alert above is the time between the onset of the out of tolerance lateral or vertical relative position error and the transmission of the last bit of the message that contains the integrity data that reflects the condition (see Attachment D, 7.5.14).

Note 2.— For FAST D ground subsystems, additional range domain monitoring requirements apply as defined in 3.6.7.3.3.2, 3.6.7.3.3.3 and 3.6.7.3.4. In these sections, time limits are defined for the ground system to detect and alert the airborne receiver of out-of-tolerance differential pseudo-range errors.

3.6.7.1.2.1.2.1.2 For a ground segment classified as FAST A, the GBAS ground subsystem maximum signal-in-space time-to-alert shall be less than or equal to 5.5 seconds when Type 101 messages are broadcast.

3.6.7.1.2.1.3 *Ground subsystem FASLAL and FASVAL*

3.6.7.1.2.1.3.1 For message Type 4 FAS data blocks with APD coded as 1, 2, 3 or 4, the value FASLAL for each FAS block, as defined in the FAS lateral alert limit field of the Type 4 message shall be no greater than 40 metres, and the value FASVAL for each FAS block, as defined in the FAS vertical alert limit field of the Type 4 message, shall be no greater than 10 metres.

3.6.7.1.2.1.3.2 For message Type 4 FAS data blocks with APD coded as zero, the value FASLAL and FASVAL shall be no greater than the lateral and vertical alert limits given in Annex 10, Volume I, 3.7.2.4 for the intended operational use.

3.6.7.1.2.1.4 *Ground subsystem signal-in-space integrity risk for GBAS positioning service*. For GBAS ground subsystem that provides the GBAS positioning service, integrity risk shall be less than 9.9×10^{-8} per hour.

Note 1.— The integrity risk assigned to the GBAS ground subsystem is a subset of the GBAS signal in-space integrity risk, where the protection level integrity risk (3.6.7.1.2.2.2) has been excluded and the effects of all other GBAS, SBAS and core satellite constellations failures are included. The GBAS ground subsystem integrity risk includes the integrity risk of satellite signal monitoring required in 3.6.7.3.3.

Note 2.— GBAS signal-in-space integrity risk is defined as the probability that the ground subsystem provides information which when processed by a fault-free receiver, using any GBAS data that could be used by the aircraft, results in an out-of-tolerance horizontal relative position error without annunciation for a period longer than the maximum time-to-alert. An out-of-tolerance horizontal relative position error is defined as an error that exceeds both the horizontal protection level and the horizontal ephemeris error position bound.

3.6.7.1.2.1.4.1 *Time-to-alert for GBAS positioning service*. The GBAS ground subsystem maximum time-to-alert shall be less than or equal to 3 seconds when Type 1 messages are broadcast and less than or equal to 5.5 seconds when Type 101 messages are broadcast.

Note.— The time-to-alert above is the time between the onset of the out-of-tolerance horizontal relative position error and the transmission of the last bit of the message that contains the integrity data that reflects the condition.

3.6.7.1.2.2 *Protection level integrity risk*

3.6.7.1.2.2.1 For a GBAS ground subsystem that provides GBAS approach services, the protection level integrity risk shall be less than 5×10^{-8} per approach.

Note.— For approach services, the protection level integrity risk is the integrity risk due to undetected errors in the 100-second smoothed position solution relative to the GBAS reference point greater than the associated protection levels under the two following conditions:

a) normal measurement conditions defined in 3.6.5.5.1.1 with D_V and D_L set to zero; and

b) faulted measurement conditions defined in 3.6.5.5.1.2 with D_V and D_L set to zero.

Note.— The ground subsystem bounding of the 100-second smoothed GAST D position solution will ensure that the 30 smoothed GAST D position solution is bounded.

3.6.7.1.2.2.1.1 *Additional bounding requirements for FAST D ground subsystems*. The σ_{vert} (used in computing the protection level VPL_{H0}) and σ_{lat} (used in computing the protection level LPL_{H0}) for GAST D formed, based on the broadcast parameters (defined in 3.6.5.5.1.1.1) and excluding the airborne contribution, shall satisfy the condition that a normal distribution with zero mean and a standard deviation equal to σ_{vert} and σ_{lat} bounds the vertical and lateral error distributions of the combined differential correction errors as follows:

$$\int_{y}^{\infty} f_n(x)dx \leq Q\left(\frac{y}{\sigma}\right) \text{ for all } \frac{y}{\sigma} \geq 0 \text{ and}$$

$$\int_{-\infty}^{-y} f_n(x)dx \leq Q\left(\frac{y}{\sigma}\right) \text{ for all } \frac{y}{\sigma} \geq 0$$

where

$f_n(x)$ = probability density function of the differential vertical or lateral position error excluding the airborne contribution, and

$Q(x)$ $= \frac{1}{\sqrt{2\pi}} \int_x^{\infty} e^{-\frac{t^2}{2}} dt$

The $\sigma_{vert,H1}$ (used in computing the protection level VPL_{H1}) and $\sigma_{lat,H1}$ (used in computing the protection level LPL_{H1}) for GAST D formed, based on the broadcast parameters (defined in 3.6.5.5.1.2) and excluding the airborne contribution, shall bound the combined differential correction errors (as defined above) formed by all possible subsets with one reference receiver excluded.

Note 1.— The airborne contribution is addressed in 3.6.8.3.2.1 in combination with the use of the standard airborne multipath model defined in 3.6.5.5.1.1.2.

Note 2.— The combined differential correction errors refer to code-carrier-smoothed corrections based on 100-second smoothing time constant.

3.6.7.1.2.2.1.2 For a GBAS ground subsystem classified as FAST D, the rate of faulted measurements from any one, and only one, reference receiver shall be less than 1×10^{-5} per 150 seconds.

Note.— Faulted measurements can occur from faults within the receiver or from environmental conditions unique to a single reference receiver location.

3.6.7.1.2.2.2 For a GBAS ground subsystem that provides the positioning service, protection level integrity risk shall be less than 10^{-9} per hour.

Note.— The GBAS positioning service protection level integrity risk is the integrity risk due to undetected errors in the horizontal position relative to the GBAS reference point greater than the GBAS positioning service protection level under the two following conditions:

a) normal measurement conditions defined in 3.6.5.5.2.1; and

b) faulted measurement conditions defined in 3.6.5.5.2.2.

3.6.7.1.3 *Continuity of service*

3.6.7.1.3.1 Continuity of service for approach services. The GBAS ground subsystem continuity of service shall be greater than or equal to $1 - 8.0 \times 10^{-6}$ per 15 seconds.

Note.— The GBAS ground subsystem continuity of service is the average probability per 15-second period that the VHF data broadcast transmits data in tolerance, VHF data broadcast field strength is within the specified range and the protection levels are lower than the alert limits, including configuration changes that occur due to the space segment. This continuity of service requirement is the entire allocation of the signal-in-space continuity requirement from Chapter 3, Table 3.7.2.4-1, and therefore all continuity risks included in that requirement must be accounted for by the ground subsystem provider.

3.6.7.1.3.2 *Additional continuity of service requirements for FAST D*. The probability of a GBAS ground subsystem failure or false alert, excluding ranging source monitoring, causing an unscheduled interruption of service for a period equal to or greater than 1.5 seconds shall not exceed 2.0×10^{-6} during any 15 second interval. The probability that the ground subsystem excludes any individual fault-free ranging source from the Type 1 or Type 11 corrections due to a false detection by the ground integrity monitors shall not exceed 2.0×10^{-7} during any 15 second interval.

Note 1.— Loss of service includes failures resulting in loss of the VHF data broadcast, failure to meet the VHF data broadcast field strength, failures resulting in transmission of out-of-tolerance VHF broadcast data, and alert due to an integrity failure. Guidance material on the potential causes of loss of service and monitor false detections are contained in Attachment D, 7.6.2.1.

Note 2.— Continuity for FAST D is defined as the probability that the ground subsystem continues to provide the services associated with the intended ground subsystem functions. Total aircraft continuity of navigation system performance in the position domain must be evaluated in the context of a specific satellite geometry and aeroplane integration. Evaluation of position domain navigation service continuity is the responsibility of the airborne user for GAST D. Additional information regarding continuity is given in Attachment D, 7.6.2.1.

3.6.7.1.3.3 *Continuity of service for positioning service*

Note.— For GBAS ground subsystems that provide the GBAS positioning service, there may be additional continuity requirements depending on the intended operations.

3.6.7.2 *FUNCTIONAL REQUIREMENTS*

3.6.7.2.1 *General*

3.6.7.2.1.1 *Data broadcast requirements.*

3.6.7.2.1.1.1 A GBAS ground subsystem shall broadcast message types as defined in Table B-147 according to the service types supported by the ground subsystem.

3.6.7.2.1.1.2 Each GBAS ground subsystem shall broadcast Type 2 messages with additional data blocks as required to support the intended operations.

Note.— Guidance material concerning usage of the Type 2 message additional data blocks is provided in Attachment D, 7.17.

3.6.7.2.1.1.3 Each GBAS ground subsystem which supports GBAS approach service type (GAST) B, C or D shall broadcast FAS blocks in Type 4 messages for these approaches. If a GBAS ground subsystem supports any approach using GAST A or B and does not broadcast FAS blocks for the corresponding approaches, it shall broadcast additional data block 1 in the Type 2 message.

Note.— FAS blocks for APV procedures may be held within a database on board the aircraft. Broadcasting additional data block 1 allows the airborne receiver to select the GBAS ground subsystem that supports the approach procedures in the airborne database. FAS blocks may also be broadcast to support operations by aircraft without an airborne database. These procedures use different channel numbers as described in Attachment D, 7.7.

3.6.7.2.1.1.4 When the Type 5 message is used, the ground subsystem shall broadcast the Type 5 message at a rate in accordance with Table B-148.

Note.— When the standard 5 degree mask is not adequate to describe satellite visibility at either the ground subsystem antennas or at an aircraft during a specific approach, the Type 5 message may be used to broadcast additional information to the aircraft.

3.6.7.2.1.1.5 Data broadcast rates. For all message types required to be broadcast, messages meeting the field strength requirements of Chapter 3, 3.7.3.5.4.4.1.2 and 3.7.3.5.4.4.2.2 and the minimum rates shown in Table B-148 shall be provided at every point within the service volume. The total message broadcast rates from all antenna systems of the ground subsystem combined shall not exceed the maximum rates shown in Table B-148.

Note.— Guidance material concerning the use of multiple antenna systems is provided in Attachment D, 7.12.4.

3.6.7.2.1.2 *Message block identifier*. The MBI shall be set to either normal or test according to the coding given in 3.6.3.4.1.

Table B-147. GBAS message types for supported service types

Message type	*GAST A – Note 1*	*GAST B – Note 1*	*GAST C – Note 1*	*GAST D – Note 1*
MT 1	Optional – Note 2	Required	Required	Required
MT 2	Required	Required	Required	Required
MT2-ADB 1	Optional – Note 3	Optional – Note 3	Optional – Note 3	Required
MT2-ADB 2	Optional – Note 4	Optional – Note 4	Optional – Note 4	Optional
MT2-ADB 3	Not used	Not used	Not used	Required
MT2-ADB 4	Recommended	Recommended	Recommended	Required
MT3-Note 5	Recommended	Recommended	Recommended	Required
MT 4	Optional	Required	Required	Required
MT 5	Optional	Optional	Optional	Optional
MT11 – Note 6	Not used	Not used	Not used	Required
MT 101	Optional – Note 2	Not allowed	Not allowed	Not allowed

Note 1.— Definition of terms:

- *Required: Message needs to be transmitted when supporting the service type;*
- *Optional: Message transmission is optional when supporting the service type (not used by some or all airborne subsystems);*
- *Recommended: Use of the message is optional, but recommended, when supporting the service type;*
- *Not used: Message is not used by airborne subsystems for this service type;*
- *Not allowed: Message transmission is not allowed when supporting the service type.*

Note 2.— Ground subsystems supporting GAST A service types may broadcast Type 1 or 101 Messages, but not both. Guidance material concerning usage of the Type 101 message is provided in Attachment D, 7.18.
Note 3.— MT2-ADB1 is required if positioning service is offered.
Note 4.— MT2-ADB2 is required if GRAS service is offered.
Note 5.— MT3 is recommended (GAST A, B, C) or required (GAST-D) to be used only in order to meet slot occupancy requirements in 3.6.7.4.1.3.
Note 6.— Guidance material concerning usage of the Type 11 message is provided in Attachment D, 7.20.

Table B-148. GBAS VHF data broadcast rates

Message type	*Minimum broadcast rate*	*Maximum broadcast rate*
1 or 101	For each measurement type: All measurement blocks once per frame (Note)	For each measurement type: All measurement blocks once per slot
2	Once per 20 consecutive frames	Once per frame (except as stated in 3.6.7.4.1.2)
3	Rate depends on message length and scheduling of other messages (see 3.6.7.4.1.3)	Once per slot and eight times per frame
4	All FAS blocks once per 20 consecutive frames	All FAS blocks once per frame
5	All impacted sources once per 20 consecutive frames	All impacted sources once per 5 consecutive frames
11	For each measurement type: All measurement blocks once per frame (see Note)	For each measurement type: All measurement blocks once per slot

Note.— One Type 1, Type 11 or Type 101 message or two Type 1, Type 11 or Type 101 messages that are linked using the additional message flag described in 3.6.4.2, 3.6.4.10.3 or 3.6.4.11.3.

3.6.7.2.1.3 VDB authentication

3.6.7.2.1.3.1 **Recommendation.**— *All GBAS ground subsystems should support VDB authentication (see 3.6.7.4)*.

3.6.7.2.1.3.2 All ground subsystems classified as FAST D shall support VDB authentication (see 3.6.7.4).

3.6.7.2.2 *Pseudo-range corrections*

3.6.7.2.2.1 *Message latency*. The time between the time indicated by the modified Z-count and the last bit of the broadcast Type 1, Type 11 or Type 101 message shall not exceed 0.5 seconds.

3.6.7.2.2.2 *Low-frequency data*. Except during an ephemeris change, the first ranging source in the Type 1, Type 11 or Type 101 message shall sequence so that the low-frequency data (as defined in 3.6.4.2.1 for Type 1 message, 3.6.4.11.1 for Type 11 message and 3.6.4.10.1 for Type 101 message) for each core satellite constellation's ranging source are transmitted at least once every 10 seconds. During an ephemeris change, the first ranging source shall sequence so that the low-frequency data for each core satellite constellation's ranging source are transmitted at least once every 27 seconds. When new ephemeris data are received from a core satellite constellation's ranging source, the ground subsystem shall use the previous ephemeris data from each satellite until the new ephemeris data have been continuously received for at least 2 minutes but shall make a transition to the new ephemeris data before 3 minutes have passed. When this transition is made to using the new ephemeris data for a given ranging source, the ground subsystem shall broadcast the new ephemeris CRC and associated low-frequency information, notably P and P_D for all occurrences of that ranging source in the low-frequency information of Type 1, Type 11 or Type 101 message in the next 3 consecutive frames. For a given ranging source, the ground subsystem shall continue to transmit data corresponding to the previous ephemeris data until the new CRC ephemeris is transmitted in the low-frequency data of Type 1, Type 11 or Type 101 message (see *Note*). If the ephemeris CRC changes and the IOD does not, the ground subsystem shall consider the ranging source invalid.

Note.— The delay before the ephemeris transition allow sufficient time for the aircraft subsystem to collect new ephemeris data.

3.6.7.2.2.2.1 **Recommendation.**— *The ephemeris decorrelation parameter and the ephemeris CRC for each core satellite constellation's ranging source should be broadcast as frequently as possible.*

3.6.7.2.2.3 *Broadcast pseudo-range correction*. Each broadcast pseudo-range correction shall be determined by combining the pseudo-range correction estimates for the relevant ranging source calculated from each of the reference receivers. For each satellite, the measurements used in this combination shall be obtained from the same ephemeris data. The corrections shall be based on smoothed code pseudo-range measurements for each satellite using the carrier measurement from a smoothing filter and the approach service type specific smoothing parameters in accordance with Appendix B, 3.6.5.1.

3.6.7.2.2.4 *Broadcast signal-in-space integrity parameters*. The ground subsystem shall provide σ_{pr_gnd} and B parameters for each pseudo-range correction in Type 1 message such that the protection level integrity risk requirements defined in 3.6.7.1.2.2 for GAST A, B, and C are satisfied. At least two B values that are not using the special coding (as defined in 3.6.4.2.4) shall be provided with each pseudo-range correction. The ground subsystem shall provide σ_{pr_gnd} and, if necessary, B parameters for each pseudo-range correction in Type 101 message such that the protection level integrity risk requirements defined in 3.6.7.1.2.2 are satisfied.

Note.— Broadcast of the B parameters are optional for Type 101 messages. Guidance material regarding the B parameters in Type 101 messages is contained in Attachment D, 7.5.11.

3.6.7.2.2.4.1 *Broadcast signal-in-space integrity parameters for FAST D ground subsystems*. Ground subsystems that support GAST D shall provide Sigma_PR_gnd_D in the Type 11 message and B parameters for each pseudo-range correction in the Type 1 message, such that the protection level integrity risk requirement defined in 3.6.7.1.2.2.1 is satisfied.

3.6.7.2.2.4.2 For FAST D systems broadcasting the Type 11 message, if σ_{pr_gnd} is coded as invalid in the Type 1 message, then the Sigma_PR_gnd_D for the associated satellite in the Type 11 message shall also be coded as invalid.

3.6.7.2.2.5 **Recommendation**.— *Reference receiver measurements should be monitored. Faulted measurements or failed reference receivers should not be used to compute the pseudo-range corrections.*

3.6.7.2.2.6 *Repeated transmission of Type 1, Type 2, Type 11 or Type 101 messages*. For a given measurement type and within a given frame, all broadcasts of Type 1, Type 2, Type 11 or Type 101 messages or linked pairs from all GBAS broadcast stations that share a common GBAS identification, shall have identical data content.

3.6.7.2.2.7 *Issue of data*. The GBAS ground subsystem shall set the IOD field in each ranging source measurement block to be the IOD value received from the ranging source that corresponds to the ephemeris data used to compute the pseudo-range correction.

3.6.7.2.2.8 *Application of signal error models*. Ionospheric and tropospheric corrections shall not be applied to the pseudo-ranges used to calculate the pseudo-range corrections.

3.6.7.2.2.9 *Linked pair of Type 1, Type 11 or Type 101 messages*. If a linked pair of Type 1, Type 11 or Type 101 messages is transmitted then,

a) the two messages shall have the same modified Z-count;

b) the minimum number of pseudo-range corrections in each message shall be one;

c) the measurement block for a given satellite shall not be broadcast more than once in a linked pair of messages;

d) the two messages shall be broadcast in different time slots;

e) the order of the B values in the two messages shall be the same;

f) for a particular measurement type, the number of measurements and low-frequency data shall be computed separately for each of the two individual messages;

g) in the case of FAST D, when a pair of linked Type 1 messages are transmitted, there shall also be a linked pair of Type 11 messages; and

h) if linked message types of Type 1 or Type 11 are used, the satellites shall be divided into the same sets and order in both Type 1 and Type 11 messages.

Note.— Type 1 messages may include additional satellites not available in Type 11 messages, but the relative order of those satellites available in both messages is the same in Type 1 and Type 11 messages. Airborne processing is not possible for satellites included in the Type 11 message, but also not included in the associated Type 1 message.

3.6.7.2.2.9.1 **Recommendation**.— *Linked messages should only be used when there are more pseudo-range corrections to transmit than will fit in one Type 1 message.*

3.6.7.2.2.10 *Modified Z-count requirements*

3.6.7.2.2.10.1 *Modified Z-count update*. The modified Z-count for Type 1, Type 11 or Type 101 messages of a given measurement type shall advance every frame.

3.6.7.2.2.10.2 If message Type 11 is broadcast, the associated Type 1 and Type 11 messages shall have the same modified Z-count.

3.6.7.2.2.11 *Ephemeris decorrelation parameters*

3.6.7.2.2.11.1 *Ephemeris decorrelation parameter for approach services*. For ground subsystems that broadcast the additional data block 1 in the Type 2 message, the ground subsystem shall broadcast the ephemeris decorrelation parameter in the Type 1 message for each core satellite constellation ranging source such that the ground subsystem integrity risk of 3.6.7.1.2.1.1.1 is met.

3.6.7.2.2.11.2 *Ephemeris decorrelation parameter for GAST D*. Ground subsystems classified as FAST D shall broadcast the ephemeris decorrelation parameter in the Type 11 message for each core satellite constellation ranging source such that the ground subsystem signal-in-space integrity risk of 3.6.7.1.2.1.1.2 is met.

3.6.7.2.2.11.3 *GBAS positioning service*. For ground subsystems that provide the GBAS positioning service, the ground subsystem shall broadcast the ephemeris decorrelation parameter in the Type 1 message for each core satellite constellation's ranging source such that the ground subsystem signal-in-space integrity risk of 3.6.7.1.2.1.4 is met.

3.6.7.2.3 *GBAS-related data*

3.6.7.2.3.1 *Tropospheric delay parameters*. The ground subsystem shall broadcast a refractivity index, scale height, and refractivity uncertainty in a Type 2 message such that the protection level integrity risk requirements defined in 3.6.7.1.2.2 are satisfied.

3.6.7.2.3.2 *GCID indication*

3.6.7.2.3.2.1 *GCID indication for FAST A, B or C*. If the ground subsystem meets the requirements of 3.6.7.1.2.1.1.1, 3.6.7.1.2.2.1, 3.6.7.1.3.1, 3.6.7.3.2 and 3.6.7.3.3.1 but not all of 3.6.7.1.2.1.1.2, 3.6.7.1.2.1.1.3, 3.6.7.1.2.2.1.1, and 3.6.7.1.3.2 the GCID shall be set to 1, otherwise it shall be set to 7.

Note.— Some of the requirements applicable to FAST D are redundant with the FAST A, B and C requirements. The phrase "not all of" refers to the condition where a ground subsystem may meet some of the requirements applicable to FAST D but not all of them. Therefore, in that condition, the GCID would be set to 1, indicating that the ground subsystem meets only FAST A, B or C.

3.6.7.2.3.2.2 *GCID indication for FAST D*. If the ground subsystem meets the requirements of 3.6.7.1.2.1.1.1, 3.6.7.1.2.1.1.2, 3.6.7.1.2.1.1.3, 3.6.7.1.2.2.1.1, 3.6.7.1.2.2.1, 3.6.7.1.3.1, 3.6.7.1.3.2, 3.6.7.3.2 and 3.6.7.3.3, the GCID shall be set to 2, otherwise it shall be set in accordance with 3.6.7.2.3.2.1.

3.6.7.2.3.2.3 GCID values of 3 and 4 are reserved for future service types and shall not be used.

3.6.7.2.3.3 *GBAS reference antenna phase centre position accuracy*. For each GBAS reference receiver, the reference antenna phase centre position error shall be less than 8 cm relative to the GBAS reference point.

3.6.7.2.3.4 **Recommendation**.— *GBAS reference point survey accuracy. The survey error of the GBAS reference point, relative to WGS-84, should be less than 0.25 m vertical and 1 m horizontal.*

Note.— Relevant guidance material is given in Attachment D, 7.16.

3.6.7.2.3.5 *Ionospheric uncertainty estimate parameter*

3.6.7.2.3.5.1 *Ionospheric uncertainty estimate parameter for all ground subsystems*. The ground subsystem shall broadcast an ionospheric delay gradient parameter in the Type 2 message such that the protection level integrity risk requirements defined in 3.6.7.1.2.2 are satisfied.

3.6.7.2.3.5.2 *Ionospheric uncertainty estimate parameter for FAST D ground subsystems*. The ground subsystem shall broadcast an ionospheric delay gradient parameter in the Type 2 message, additional data block 3, such that the protection level integrity risk requirements defined in 3.6.7.1.2.2 are satisfied.

Note.— Guidance material concerning FAST D position domain error bounding for ionospheric errors may be found in Attachment D, 7.5.6.1.3 and 7.5.6.1.4.

3.6.7.2.3.6 For ground subsystems that provide the GBAS positioning service, the ground subsystem shall broadcast the ephemeris error position bound parameters using additional data block 1 in the Type 2 message.

3.6.7.2.3.7 **Recommendation**.— *All ground subsystems should broadcast the ephemeris error position bound parameters using additional data block 1 in the Type 2 message.*

3.6.7.2.3.8 For ground subsystems that broadcast additional data block 1 in the Type 2 message, the following requirements shall apply:

3.6.7.2.3.8.1 *Maximum use distance*. The ground subsystem shall provide the maximum use distance (D_{max}). When the positioning service is provided the ground subsystem integrity risk in 3.6.7.1.2.1.4 and the protection level integrity risk in 3.6.7.1.2.2.2 shall be met within D_{max}. When approach service is provided, the maximum use distance shall at least encompass all approach service volumes supported.

3.6.7.2.3.8.2 *Ephemeris missed detection parameters*. The ground subsystem shall broadcast the ephemeris missed detection parameters for each core satellite constellation such that the ground subsystem integrity risk of 3.6.7.1.2.1 is met.

3.6.7.2.3.8.3 *GBAS positioning service indication*. If the ground subsystem does not meet the requirements of 3.6.7.1.2.1.4 and 3.6.7.1.2.2.2, the ground subsystem shall indicate using the RSDS parameter that the GBAS positioning service is not provided.

3.6.7.2.3.9 If the VHF data broadcast is transmitted at more than one frequency within the GRAS service area, each GBAS broadcast station within the GRAS ground subsystem shall broadcast additional data blocks 1 and 2.

3.6.7.2.3.9.1 **Recommendation**.— *The VHF data broadcast should include additional data block 2 parameters to identify channel numbers and locations of adjacent and nearby GBAS broadcast stations within the GRAS ground subsystem.*

Note.— This facilitates the transition from one GBAS broadcast station to other GBAS broadcast stations in the GRAS ground subsystem.

3.6.7.2.4 *Final approach segment data*

3.6.7.2.4.1 *FAS data points accuracy*. The relative survey error between the FAS data points and the GBAS reference point shall be less than 0.25 metres vertical and 0.40 metres horizontal.

3.6.7.2.4.2 **Recommendation**.— *The final approach segment CRC should be assigned at the time of procedure design, and kept as an integral part of the FAS data block from that time onward.*

3.6.7.2.4.3 **Recommendation**.— *The GBAS should allow the capability to set the FASVAL and FASLAL for any FAS data block to "1111 1111" to limit the approach to lateral only or to indicate that the approach must not be used, respectively.*

3.6.7.2.4.4 *LTP/FTP for FAST D*. For an approach that supports GAST D, the LTP/FTP point in the corresponding FAS definition shall be located at the intersection of the runway centre line and the landing threshold.

Note.— Airborne systems may compute the distance to the landing threshold using the LTP/FTP. For GAST D approaches, the LTP/FTP is to be at the threshold so that these distance-to-go computations reliably reflect the distance to the threshold.

3.6.7.2.4.5 *FPAP location for FAST D*. For an approach that supports GAST D, the FPAP point in the corresponding FAS definition shall be located on the extended runway centre line and the ΔLength offset parameter shall be coded to correctly indicate the stop end of the runway.

3.6.7.2.5 *Predicted ranging source availability data*

Note.— Ranging source availability data are optional for FAST A, B, C or D ground subsystems and may be required for possible future operations.

3.6.7.2.6 *General functional requirements on augmentation*

3.6.7.2.6.1 **Recommendation**.— *GBAS ground subsystems classified as FAST C or FAST D should provide augmentation based on GPS at a minimum.*

3.6.7.2.6.2 **Recommendation**.— *Ground subsystems classified as FAST C should be able to process and broadcast corrections for at least 12 satellites of each core constellation for which differential corrections are provided.*

3.6.7.2.6.3 Ground subsystems classified as FAST D shall be able to process and broadcast differential corrections for at least 12 satellites of one core constellation.

Note.— Technical validation has only been completed for GAST D when applied to GPS.

3.6.7.2.6.4 **Recommendation**.— *Whenever possible, differential corrections for all visible satellites with an elevation greater than 5 degrees above the local horizontal plane tangent to the ellipsoid at the ground subsystem reference location should be provided for each core constellation for which augmentation is provided.*

Note.— The phrase "whenever possible" in this context means whenever meeting another requirement in these SARPs (e.g. 3.6.7.3.3.1) does not preclude providing a differential correction for a particular satellite.

3.6.7.3 *MONITORING*

3.6.7.3.1 *RF monitoring*

3.6.7.3.1.1 *VHF data broadcast monitoring.* The data broadcast transmissions shall be monitored. The transmission of the data shall cease within 0.5 seconds in case of continuous disagreement during any 3-second period between the transmitted application data and the application data derived or stored by the monitoring system prior to transmission. For FAST D ground subsystems, the transmission of Type 11 messages shall cease within 0.5 seconds in case of continuous disagreement during any 1-second period between the transmitted application data and the application data derived or stored by the monitoring system prior to transmission.

Note.— For ground subsystems that support authentication, ceasing the transmission of data means ceasing the transmission of Type 1 messages and/or Type 11 messages if applicable or ceasing the transmission of Type 101 messages. In accordance with 3.6.7.4.1.3, the ground subsystem must still transmit messages such that the defined percentage or more of every assigned slot is occupied. This can be accomplished by transmitting Type 2, Type 3, Type 4 and/or Type 5 messages.

3.6.7.3.1.2 *TDMA slot monitoring*. The risk that the ground subsystem transmits a signal in an unassigned slot and fails to detect an out-of-slot transmission, which exceeds that allowed in 3.6.2.6, within 1 second, shall be less than 1×10^{-7} in any 30-second period. If out-of-slot transmissions are detected, the ground subsystem shall terminate all data broadcast transmissions within 0.5 seconds.

3.6.7.3.1.3 *VDB transmitter power monitor*. The probability that the horizontally or elliptically polarized signal's transmitted power increases by more than 3 dB from the nominal power for more than 1 second shall be less than 2.0×10^{-7} in any 30-second period.

Note.— The vertical component is only monitored for GBAS/E equipment.

3.6.7.3.2 *Data monitoring*

3.6.7.3.2.1 *Broadcast quality monitor*. The ground subsystem monitoring shall comply with the time-to-alert requirements given in 3.6.7.1.2.1. The monitoring action shall be one of the following:

a) to broadcast Type 1 (and Type 11 if broadcast) or Type 101 messages with no measurement blocks; or

b) to broadcast Type 1 (and Type 11 if broadcast) or Type 101 messages with the $\sigma_{pr\_gnd,i}$ (and $\sigma_{pr\_gnd\_D,I}$ if broadcast) field set to indicate the ranging source is invalid for every ranging source included in the previously transmitted frame; or

c) to terminate the data broadcast.

Note.— Monitoring actions a) and b) are preferred to c) if the particular failure mode permits such a response, because actions a) and b) typically have a reduced signal-in-space time-to-alert.

3.6.7.3.3 *Integrity monitoring for GNSS ranging sources*

3.6.7.3.3.1 The ground subsystem shall monitor the satellite signals to detect conditions that will result in improper operation of differential processing for airborne receivers complying with the tracking constraints in Attachment D, 8.11. The monitor time-to-alert shall comply with 3.6.7.1.2. The monitor action shall be to set σ_{pr_gnd} to the bit pattern "1111 1111" for the satellite or to exclude the satellite from the Type 1, Type 11 or Type 101 message.

3.6.7.3.3.1.1 The ground subsystem shall use the strongest correlation peak in all receivers used to generate the pseudo-range corrections. The ground subsystem shall also detect conditions that cause more than one zero crossing for airborne receivers that use the early-late discriminator function as described in Attachment D, 8.11.

3.6.7.3.3.2 For FAST D ground subsystems, the probability that the error at the landing threshold point (LTP) of any runway for which the ground subsystem supports GAST D, |Er|, on the 30-second smoothed corrected pseudo-range (see 3.6.5.2) caused by a ranging source fault, is not detected and reflected in the broadcast Type 11 message within 1.5 s shall fall within the region specified in Table B-149. Ranging source faults for which this requirement applies are:

a) signal deformation (Note 1.);

b) code/carrier divergence;

c) excessive pseudo-range acceleration, such as a step or other rapid change; and

d) erroneous broadcast of ephemeris data from the satellite.

Note 1.— Refer to Attachment D, 8.11 for further information on GAEC-D avionics relating to signal deformation fault.

Note 2.— Upon detection, a ranging source fault may be reflected in the Type 11 message by either:

a) removing the correction for the associated satellite from the Type 11 message; or

b) marking the satellite as invalid using the coding of $\sigma_{pr\_gnd\_D}$ (see 3.6.4.11.4).

Note 3.— The acceptable probability of a missed detection region is defined with respect to differentially corrected pseudo-range error. The differentially corrected pseudo-range error, |Er|, includes the error resulting from a single ranging source fault, given the correct application of GBAS ground subsystem message Type 11 broadcast corrections (i.e. pseudo-range correction and range rate corrections defined in 3.6.4.11) by the aircraft avionics as specified within 3.6.8.3. Evaluation of P_{md} performance includes GBAS ground subsystem fault-free noise. The growth of |Er| with time should consider the data latency of the ground subsystem, but not the airborne latency, as described in Attachment D, 7.5.14.

Note 4.— Additional information regarding the ranging source fault conditions and monitoring requirements for FAST D ground subsystems may be found in Attachment D, 7.5.14. Missed messages do not need to be considered as part of compliance with this requirement.

Table B-149. P_{md_limit} parameters

Probability of Missed Detection	*Pseudo-range Error (metres)*
$P_{md\_limit} \leq 1$	$0 \leq \lvert E_r \rvert < 0.75$
$P_{md\_limit} \leq 10^{(-2.56 \times \lvert Er \rvert + 1.92)}$	$0.75 \leq \lvert E_r \rvert < 2.7$
$P_{md\_limit} \leq 10^{-5}$	$2.7 \leq \lvert E_r \rvert < \infty$

3.6.7.3.3.3 For FAST D ground subsystems, the probability that an error at the landing threshold point (LTP) of any runway for which the ground subsystem supports GAST D, |Er|, greater than 1.6 metres on the 30-second smoothed corrected pseudo-range (see 3.6.5.2), caused by a ranging source fault, is not detected and reflected in the broadcast Type 11 message within 1.5 seconds shall be less than 1×10^{-9} in any one landing when multiplied by the prior probability ($P_{apriori}$). Ranging source faults for which this requirement applies are:

a) signal deformation (Note 1);

b) code/carrier divergence;

c) excessive pseudo-range acceleration, such as a step or other rapid change; and

d) erroneous broadcast of ephemeris data from the satellite.

Note 1.— Refer to Attachment D, 8.11 for further information on GAEC-D avionics relating to signal deformation fault.

Note 2.— It is intended that the prior probability of each ranging source fault ($P_{apriori}$) be the same value that is used in the analysis to show compliance with error bounding requirements for FAST C and D (see Appendix B, 3.6.5.5.1.1.1).

Note 3.— Upon detection, a ranging source fault may be reflected in the Type 11 message by either:

a) removing the faulty satellite correction from the Type 11 message; or

b) marking the satellite as invalid using the coding of $\sigma_{pr\_gnd\_D}$ (see 3.6.4.11.4).

Note 4.— Additional information regarding the ranging source fault conditions and monitoring requirements for FAST D ground subsystems may be found in Attachment D, 7.5.14. Missed messages do not need to be considered as part of compliance with this requirement.

3.6.7.3.4 *Ionospheric gradient mitigation*

For FAST D ground subsystems, the probability of an error (|Er|) in the 30-second smoothed corrected pseudo-range at the landing threshold point (LTP) for every GAST D supported runway that: a) is caused by a spatial ionospheric delay gradient, b) is greater than the E_{IG} value computed from a broadcast Type 2 message, and c) is not detected and reflected in the broadcast Type 11 message within 1.5 seconds shall be less than 1×10^{-9} in any one landing. The FAST D ground subsystem shall limit the Type 2 broadcast parameters to ensure that the maximum E_{IG} at every LTP supporting GAST D operations shall not exceed 2.75 metres, except when operational requirements are demonstrated to permit it.

Note 1.— The total probability of an undetected delay gradient includes the prior probability of the gradient and the monitor(s) probability of missed detection.

Note 2.— Validation guidance for ionospheric gradient mitigation can be found in 7.5.6.1.8.

Note 3.— To broadcast Type 2 parameters such that E_{IG} exceeds 2.75 m for a specific LTP supporting GAST D operations, a tailored analysis will demonstrate that the resulting GAST D continuity and availability supports the intended operation. Guidance for assessing acceptability of E_{IG} exceeding 2.75 m can be found in 7.5.13.1.

3.6.7.4 *FUNCTIONAL REQUIREMENTS FOR AUTHENTICATION PROTOCOLS*

3.6.7.4.1 *Functional requirements for ground subsystems that support authentication*

3.6.7.4.1.1 The ground system shall broadcast the additional data block 4 with the Type 2 message with the slot group definition field coded to indicate which slots are assigned to the ground station.

3.6.7.4.1.2 The ground subsystem shall broadcast every Type 2 message only in one of a set of slots defined as the MT 2 sanctioned slots. The first slot in the group of MT 2 sanctioned slots corresponds to the SSID coding for the ground subsystem. Slot A is represented by SSID = 0, B by 1, C by 2, and H by 7. The group of MT 2 sanctioned slots then also includes the next slot after the slot corresponding to the station SSID if it exists in the frame. If there is not an additional slot before the end of the frame, only the SSID is included in the set.

Note.— For example, the MT 2 sanctioned slot group for SSID = 0 would include slots {A, B} while the MT 2 sanctioned slot group for SSID = 6 would include slots {G, H}. The MT 2 sanctioned slot group for SSID = 7 includes slot {H} only.

3.6.7.4.1.2.1 The set of slots assigned to a ground station shall include at a minimum all the slots in the MT 2 sanctioned slots as described in 3.6.7.4.1.2.

3.6.7.4.1.3 *Assigned slot occupancy*. The ground subsystem shall transmit messages such that 89 per cent or more of every assigned slot is occupied. If necessary, Type 3 messages may be used to fill unused space in any assigned time slot.

Note 1.— More information on the calculation of the slot occupancy is provided in Attachment D, 7.21.

Note 2.— The requirement applies to the aggregate transmissions from all transmitters of a GBAS ground subsystem. Due to signal blockage, not all of those transmissions may be received in the service volume.

3.6.7.4.1.4 *Reference path identifier coding*. Every reference path identifier included in every final approach segment data block broadcast by the ground subsystem via the Type 4 messages shall have the first letter selected to indicate the SSID of the ground subsystem in accordance with the following coding.

Coding:
A = SSID of 0
X = SSID of 1
Z = SSID of 2
J = SSID of 3
C = SSID of 4
V = SSID of 5
P = SSID of 6
T = SSID of 7

3.6.7.4.2 *Functional requirements for ground subsystems that do not support authentication*

3.6.7.4.2.1 *Reference path identifier coding*. Characters in this set: {A X Z J C V P T} shall not be used as the first character of the reference path identifier included in any FAS block broadcast by the ground subsystem via the Type 4 messages.

3.6.8 AIRCRAFT ELEMENTS

3.6.8.1 *GNSS receiver*. The GBAS-capable GNSS receiver shall process signals of GBAS in accordance with the requirements specified in this section as well as with requirements in 3.1.3.1 and/or 3.2.3.1 and/or 3.5.8.1.

Note.— In order to ensure the required performance and functional objectives for GAST D are achieved, it is necessary for the airborne equipment to meet defined performance and functional standards. The relevant minimum operational performance standards are detailed in RTCA DO-253D.

3.6.8.2 *PERFORMANCE REQUIREMENTS*

3.6.8.2.1 *GBAS aircraft receiver accuracy*

3.6.8.2.1.1 The RMS of the total aircraft receiver contribution to the error for GPS and GLONASS shall be:

$$RMS_{pr\_air}(\theta_n) \leq a_0 + a_1 \times e^{-(\theta_n/\theta_0)}$$

where

n = the nth ranging source;
θ_n = the elevation angle for the nth ranging source; and
a_0, a_1, and θ_0 = as defined in Table B-150 for GPS and Table B-151 for GLONASS.

3.6.8.2.1.2 The RMS of the total aircraft receiver contribution to the error for SBAS satellites shall be as defined in 3.5.8.2.1 for each of the defined aircraft accuracy designators.

Note.— The aircraft receiver contribution does not include the measurement error induced by airframe multipath.

Table B-150. Aircraft GPS receiver accuracy requirement

Aircraft accuracy designator	θ_n *(degrees)*	a_0 *(metres)*	a_1 *(metres)*	θ_0 *(degrees)*
A	≥5	0.15	0.43	6.9
B	≥5	0.11	0.13	4

Table B-151. Aircraft GLONASS receiver accuracy requirement

Aircraft accuracy designator	θ_n *(degrees)*	a_0 *(metres)*	a_1 *(metres)*	θ_0 *(degrees)*
A	≥5	0.39	0.9	5.7
B	≥5	0.105	0.25	5.5

3.6.8.2.2 *VHF data broadcast receiver performance*

3.6.8.2.2.1 *VHF data broadcast tuning range*. The VHF data broadcast receiver shall be capable of tuning frequencies in the range of 108.000 – 117.975 MHz in increments of 25 kHz.

3.6.8.2.2.2 *VHF data broadcast capture range*. The VHF data broadcast receiver shall be capable of acquiring and maintaining lock on signals within ±418 Hz of the nominal assigned frequency.

Note.— The frequency stability of the GBAS ground subsystem, and the worst-case doppler shift due to the motion of the aircraft, are reflected in the above requirement. The dynamic range of the automatic frequency control should also consider the frequency-stability error budget of the aircraft VHF data broadcast receiver.

3.6.8.2.2.3 *VHF data broadcast message failure rate*. The VHF data broadcast receiver shall achieve a message failure rate less than or equal to one failed message per 1 000 full-length (222 bytes) application data messages, within the range of the RF field strength defined in Chapter 3, 3.7.3.5.4.4 as received by the airborne antenna. This requirement shall apply when the variation in the average received signal power between successive bursts in a given time slot does not exceed 40 dB. Failed messages include those lost by the VHF data broadcast receiver system or which do not pass the CRC after application of the FEC.

Note 1.— An aircraft VHF data broadcast receiving antenna can be horizontally or vertically polarized. Due to the difference in the signal strength of horizontally and vertically polarized components of the broadcast signal, the maximum total aircraft implementation loss for horizontally polarized receiving antennas is 4 dB higher than the maximum loss for vertically polarized receiving antennas. For guidance in determining aircraft implementation loss see Attachment D, 7.2.

Note 2.— It is acceptable to exceed the signal power variation requirement in limited parts of the service volume when operational requirements permit. Refer to Attachment D, 7.12.4.1 for guidance.

3.6.8.2.2.4 *VHF data broadcast time slot decoding*. The VHF data broadcast receiver shall meet the requirements of 3.6.8.2.2.3 for all message types required (see 3.6.8.3.1.2.1) from the selected GBAS ground subsystem. These requirements shall be met in the presence of other GBAS transmissions in any and all time slots respecting the levels as indicated in 3.6.8.2.2.5.1 b).

Note.— Other GBAS transmissions may include: a) other message types with the same SSID, and b) messages with different SSIDs.

3.6.8.2.2.5 *Co-channel rejection*

3.6.8.2.2.5.1 *VHF data broadcast as the undesired signal source*. The VHF data broadcast receiver shall meet the requirements specified in 3.6.8.2.2.3 in the presence of an undesired co-channel VHF data broadcast signal that is either:

a) assigned to the same time slot(s) and 26 dB below the desired VHF data broadcast signal power at the receiver input or lower; or

b) assigned different time slot(s) and no more than 72 dB above the minimum desired VHF data broadcast signal field strength defined in 3.7.3.5.4.4 .

3.6.8.2.2.5.2 *VOR as the undesired signal*. The VHF data broadcast receiver shall meet the requirements specified in 3.6.8.2.2.3 in the presence of an undesired co-channel VOR signal that is 26 dB below the desired VHF data broadcast signal power at the receiver input.

3.6.8.2.2.5.3 *ILS localizer as the undesired signal*. The VHF data broadcast receiver shall meet the requirements specified in 3.6.8.2.2.3 in the presence of an undesired co-channel ILS localizer signal that is 26 dB below the desired VHF data broadcast signal power at the receiver input.

3.6.8.2.2.6 *Adjacent channel rejection*. The level of ILS localizer or VOR undesired signals shall be measured as the power in the RF carrier.

Note.— Even though S_{max} is the maximum desired VHF data broadcast signal power, it is also used to limit the maximum adjacent channel undesired signal power at the receiver input.

3.6.8.2.2.6.1 *First adjacent 25 kHz channels (±25 kHz)*. The VHF data broadcast receiver shall meet the requirements specified in 3.6.8.2.2.3 in the presence of an undesired signal with power levels at the receiver input up to S_{max} offset by 25 kHz on either side of the desired channel that is either:

a) 18 dB above the desired signal power at the receiver input when the undesired signal is another VHF data broadcast signal assigned to the same time slot(s); or

b) equal in power at the receiver input when the undesired signal is VOR; or

c) equal in power at the receiver input when the undesired signal is ILS localizer.

3.6.8.2.2.6.2 *Second adjacent 25 kHz channels (±50 kHz)*. The VHF data broadcast receiver shall meet the requirements specified in 3.6.8.2.2.3 in the presence of an undesired signal with power levels at the receiver input up to S_{max} offset by 50 kHz on either side of the desired channel that is either:

a) 43 dB above the desired signal power at the receiver input when the undesired signal is another VHF data broadcast source assigned to the same time slot(s); or

b) 34 dB above the desired signal power at the receiver input when the undesired signal is VOR; or

c) 34 dB above the desired signal power at the receiver input when the undesired signal is ILS localizer.

3.6.8.2.2.6.3 *Third up to thirty-ninth adjacent 25 kHz channels (±75 kHz to ±975 kHz)*. The VHF data broadcast receiver shall meet the requirements specified in 3.6.8.2.2.3 in the presence of an undesired signal with the power levels at the receiver input up to S_{max} offset by 75 kHz to 975 kHz on either side of the desired channel that is either:

a) 46 dB above the desired signal power at the receiver input when the undesired signal is another VHF data broadcast signal assigned to the same time slot(s); or

b) 46 dB above the desired signal power at the receiver input when the undesired signal is VOR; or

c) 46 dB above the desired signal power at the receiver input when the undesired signal is ILS localizer.

3.6.8.2.2.6.4 *Fortieth and beyond adjacent 25 kHz channels (±1 MHz or more)*. The VHF data broadcast receiver shall meet the requirements specified in 3.6.8.2.2.3 in the presence of an undesired signal offset by 1 MHz or more on either side of the desired channel that is either:

a) 46 dB above the desired signal power at the receiver input when the undesired signal with power levels at the receiver input up to S_{max} is another VHF data broadcast signal assigned to the same time slot(s); or

b) 46 + ΔP dB above the desired signal power at the receiver input when the undesired signal is a VOR with power levels at the receiver input up to S_{max} – ΔP dB and ΔP ranges from 0 to 14 dB; or

c) 46 + ΔP dB above the desired signal power at the receiver input when the undesired signal is an ILS localizer with power levels at the receiver input up to S_{max} – ΔP dB and ΔP ranges from 0 to 14 dB.

Note 1.— ΔP equals Smax minus the undesired signal power at the receiver input with the following two constraints. ΔP equals 0 dB when the undesired power reaches S_{max}. ΔP equals 14 dB when the undesired power is 14 dB or more below S_{max}.

Note 2.— The requirements in items b) and c) accommodate a third order intermodulation between the undesired signal and the local oscillator in the first mixer of the RF front-end of the VDB receiver; it is similar to the FM intermodulation immunity in 3.6.8.2.2.8.3 where N_1 is the undesired signal and N_2 is the local oscillator.

3.6.8.2.2.6.5 *Receiver recovery from short-term excess undesired signal power*. The VHF data broadcast receiver shall meet the requirements specified in 3.6.8.2.2.3 within 187.5 milliseconds (equivalent duration of three VDB slots) after encountering an adjacent channel interference signal (ILS localizer or VOR) whose power is above S_{max} for no more than 2.5 seconds and by no more than 9 dB at the receiver input.

Note 1.— This requirement supports brief excessive power received during ILS localizer and VOR overflight. The duration of the excess power is limited by the continuity of the operation, e.g. the opportunity to receive three Type 1 messages in every 3.5 second window (refer to 3.6.8.3.4.1) without excess power for GAST C. For GAST D, no excess power is allowed when the timeout is 1.5 seconds (refer to 3.6.8.3.4.3). A VDB undesired signal never exceeds the maximum allowed field strength of the desired VDB signal within the service volume.

Note 2.— Figure B-30 shows a graphical representation of the VDB receiver regions of operation in the presence of an undesired ILS localizer or VOR signal in the fortieth or beyond adjacent 25 kHz channel, as a function of D/U and undesired signal power.

3.6.8.2.2.7 *Rejection of off-channel signals from sources inside the 108.000 – 117.975 MHz band*. With no on-channel VHF data broadcast signal present, the VHF data broadcast receiver shall not output data from an undesired VHF data broadcast signal on any other assignable channel.

3.6.8.2.2.8 *Rejection of signals from sources outside the 108.000 – 117.975 MHz band*

3.6.8.2.2.8.1 *VHF data broadcast interference immunity*. The VHF data broadcast receiver shall meet the requirements specified in 3.6.8.2.2.3 in the presence of one or more signals having the frequency and total interference levels specified in Table B-152.

3.6.8.2.2.8.2 *Desensitization*. The VHF data broadcast receiver shall meet the requirements specified in 3.6.8.2.2.3 in the presence of VHF FM broadcast signals with signal levels shown in Tables B-153 and B-154.

Table B-152. Maximum levels of undesired signals

Frequency	*Maximum level of undesired signals at the receiver input (dB above S_{max})*
50 kHz up to 88 MHz	–12
88 MHz – 107.900 MHz	(see 3.6.8.2.2.8.2 and 3.6.8.2.2.8.3)
108.000 MHz – 117.975 MHz	Excluded
118.000 MHz	–43
118.025 MHz	–40
118.050 MHz up to 1 660.5 MHz	–12

Notes.—

1. *The relationship is linear between single adjacent points designated by the above frequencies.*
2. *These interference immunity requirements may not be adequate to ensure compatibility between VHF data broadcast receivers and VHF communication systems, particularly for aircraft that use the vertically polarized component of the VHF data broadcast. Without coordination between COM and NAV frequencies assignments or respect of a guard band at the top end of the 112 – 117.975 MHz band, the maximum levels quoted at the lowest COM VHF channels (118.000, 118.00833, 118.01666, 118.025, 118.03333, 118.04166, 118.05) may be exceeded at the input of the VDB receivers. In that case, some means to attenuate the COM signals at the input of the VDB receivers (e.g. antenna separation) will have to be implemented. The final compatibility will have to be assured when equipment is installed on the aircraft.*
3. *S_{max} is the maximum desired VHF data broadcast signal power at the receiver input.*

Table B-153. Desensitization frequency and power requirements that apply for VDB frequencies from 108.025 to 111.975 MHz

Frequency	*Maximum level of undesired signals at the receiver input (dB above S_{max})*
88 MHz ≤ f ≤ 102 MHz	16
104 MHz	11
106 MHz	6
107.9 MHz	–9

Notes.—

1. *The relationship is linear between single adjacent points designated by the above frequencies.*
2. *This desensitization requirement is not applied for FM carriers above 107.7 MHz and VDB channels at 108.025 or 108.050 MHz.*
3. *S_{max} is the maximum desired VHF data broadcast signal power at the receiver input.*

Table B-154. Desensitization frequency and power requirements that apply for VDB frequencies from 112.000 to 117.975 MHz

Frequency	*Maximum level of undesired signals at the receiver input (dB above S_{max})*
88 MHz ≤ f ≤ 104 MHz	16
106 MHz	11
107 MHz	6
107.9 MHz	1

Notes.—

1. The relationship is linear between single adjacent points designated by the above frequencies.
2. S_{max} is the maximum desired VHF data broadcast signal power at the receiver input.

3.6.8.2.2.8.3 *VHF data broadcast FM intermodulation immunity*. The VHF data broadcast receiver shall meet the requirements specified in 3.6.8.2.2.3 in the presence of interference from two-signal, third-order intermodulation products of two VHF FM broadcast signals having levels in accordance with the following:

$$2N_1 + N_2 + 3\,[23 - S_{max}] \leq 0$$

for VHF FM sound broadcasting signals in the range 107.7 – 108.0 MHz and

$$2N_1 + N_2 + 3\,[23 - S_{max} - 20\,\text{Log}\,(\Delta f / 0.4)] \leq 0$$

for VHF FM sound broadcasting signals below 107.7 MHz

where the frequencies of the two VHF FM sound broadcasting signals produce, within the receiver, a two signal, third-order intermodulation product on the desired VDB frequency.

N_1 and N_2 are the levels (dBm) of the two VHF FM sound broadcasting signals at the VHF data broadcast receiver input. Neither level shall exceed the desensitization criteria set forth in 3.6.8.2.2.8.2.

$\Delta f = 108.1 - f_1$, where f_1 is the frequency of N_1, the VHF FM sound broadcasting signal closer to 108.1 MHz.

S_{max} is the maximum desired VHF data broadcast signal power at the receiver input.

Note.— The FM intermodulation immunity requirements are not applied to a VHF data broadcast channel operating below 108.1 MHz, hence frequencies below 108.1 MHz are not intended for general assignments. Additional information is provided in the Handbook on Radio Frequency Spectrum Requirements for Civil Aviation *(Doc 9718), Volume II.*

3.6.8.3 *AIRCRAFT FUNCTIONAL REQUIREMENTS*

Note.— Unless otherwise specified, the following requirements apply to all GBAS airborne equipment classifications as described in Attachment D, 7.1.4.3.

3.6.8.3.1 *Conditions for use of data*

3.6.8.3.1.1 The receiver shall use data from a GBAS message only if the CRC of that message has been verified.

3.6.8.3.1.2 The receiver shall use message data only if the message block identifier is set to the bit pattern "1010 1010".

3.6.8.3.1.2.1 GBAS message processing capability. The GBAS receiver shall at a minimum process GBAS message types in accordance with Table B-155.

Table B-155. Airborne equipment message type processing

GBAS airborne equipment classification (GAEC)	*Minimum message types processed*
GAEC A	MT 1 or 101, MT 2 (including ADB 1 and 2 if provided)
GAEC B	MT 1, MT 2 (including ADB 1 and 2 if provided), MT 4
GAEC C	MT 1, MT 2 (including ADB 1 if provided), MT 4
GAEC D	MT 1, MT 2 (including ADB 1, 2, 3 and 4), MT 4, MT 11

3.6.8.3.1.2.2 *Airborne processing for forward compatibility*

Note.— Provisions have been made to enable future expansion of the GBAS Standards to support new capabilities. New message types may be defined, new additional data blocks for message Type 2 may be defined and new data blocks defining reference paths for inclusion within message Type 4 may be defined. To facilitate these future expansions, all equipment should be designed to properly ignore all data types that are not recognized.

3.6.8.3.1.2.2.1 *Processing of unknown message types*. The existence of messages unknown to the airborne receiver shall not prevent correct processing of the required messages.

3.6.8.3.1.2.2.2 *Processing of unknown Type 2 extended data blocks*. The existence of message Type 2 additional data blocks unknown to the airborne receiver shall not prevent correct processing of the required messages.

3.6.8.3.1.2.2.3 *Processing of unknown Type 4 data blocks*. The existence of message Type 4 data blocks unknown to the airborne receiver shall not prevent correct processing of the required messages.

Note.— While the current SARPs include only one definition of a data block for inclusion within a Type 4 message, future GBAS Standards may include other reference path definitions.

3.6.8.3.1.3 The receiver shall use only ranging source measurement blocks with matching modified Z-counts.

3.6.8.3.1.4 If D_{max} is broadcast by the ground subsystem, the receiver shall only apply pseudo-range corrections when the distance to the GBAS reference point is less than D_{max}.

3.6.8.3.1.5 The receiver shall only apply pseudo-range corrections from the most recently received set of corrections for a given measurement type. If the number of measurement fields in the most recently received message types (as required in Appendix B, 3.6.7.2.1.1.1 for the active service type) indicates that there are no measurement blocks, then the receiver shall not apply GBAS corrections for that measurement type.

3.6.8.3.1.6 *Validity of pseudo-range corrections*

3.6.8.3.1.6.1 When the active service type is A, B or C, the receiver shall exclude from the differential navigation solution any ranging sources for which σ_{pr_gnd} in the Type 1 or Type 101 messages is set to the bit pattern "1111 1111".

3.6.8.3.1.6.2 If the active service type is D, the receiver shall exclude from the differential navigation solution any ranging source for which $\sigma_{pr\_gnd\_D}$ in the Type 11 message or σ_{pr_gnd} in the Type 1 message is set to the bit pattern "1111 1111".

3.6.8.3.1.7 The receiver shall only use a ranging source in the differential navigation solution if the time of applicability indicated by the modified Z-count in the Type 1, Type 11 or Type 101 message containing the ephemeris decorrelation parameter for that ranging source is less than 120 seconds old.

3.6.8.3.1.8 *Conditions for use of data to support approach services*

3.6.8.3.1.8.1 During the final stages of an approach, the receiver shall use only measurement blocks from Type 1, Type 11 or Type 101 messages that were received within the last 3.5 seconds.

Note.— Guidance concerning time-to-alert is given in Attachment D, 7.5.14.

3.6.8.3.1.8.2 *GCID indications*

3.6.8.3.1.8.2.1 When the active service type is A, B or C, the receiver shall use message data from a GBAS ground subsystem for guidance only if the GCID indicates 1, 2, 3 or 4 prior to initiating the final stages of an approach.

3.6.8.3.1.8.2.2 When the active service type is D, the receiver shall use message data from a GBAS ground subsystem for guidance only if the GCID indicates 2, 3 or 4 prior to initiating the final stages of an approach.

3.6.8.3.1.8.3 The receiver shall ignore any changes in GCID during the final stages of an approach.

3.6.8.3.1.8.4 The receiver shall not provide approach vertical guidance based on a particular FAS data block transmitted in a Type 4 message if the FASVAL received prior to initiating the final stages of the approach is set to "1111 1111".

3.6.8.3.1.8.5 The receiver shall not provide approach guidance based on a particular FAS data block transmitted in a Type 4 message if the FASLAL received prior to initiating the final stages of the approach is set to "1111 1111".

3.6.8.3.1.8.6 Changes in the values of FASLAL and FASVAL data transmitted in a Type 4 message during the final stages of an approach shall be ignored by the receiver.

3.6.8.3.1.8.7 The receiver shall use FAS data only if the FAS CRC for that data has been verified.

3.6.8.3.1.8.8 The receiver shall only use messages for which the GBAS ID (in the message block header) matches the GBAS ID in the header of the Type 4 message which contains the selected FAS data or the Type 2 message which contains the selected RSDS.

3.6.8.3.1.8.9 *Use of FAS data*

3.6.8.3.1.8.9.1 The receiver shall use the Type 4 messages to determine the FAS for precision approach.

3.6.8.3.1.8.9.2 The receiver shall use the Type 4 messages to determine the FAS for approaches which are supported by GBAS approach service type (GAST) A or B associated with a channel number between 20 001 and 39 999.

3.6.8.3.1.8.9.3 The receiver shall use the FAS held within the on-board database for approaches which are supported by GBAS approach service type (GAST) A associated with a channel number between 40 000 and 99 999.

3.6.8.3.1.8.10 When the GBAS ground subsystem does not broadcast the Type 4 message and the selected FAS data are available to the receiver from an airborne database, the receiver shall only use messages from the intended GBAS ground subsystem.

3.6.8.3.1.9 *Conditions for use of data to provide the GBAS positioning service*

3.6.8.3.1.9.1 The receiver shall only use measurement blocks from Type 1 messages that were received within the last 7.5 seconds.

3.6.8.3.1.9.2 The receiver shall only use measurement blocks from Type 101 messages that were received within the last 5 seconds.

3.6.8.3.1.9.3 The receiver shall only use message data if a Type 2 message containing additional data block 1 has been received and the RSDS parameter in this block indicates that the GBAS positioning service is provided.

3.6.8.3.1.9.4 The receiver shall only use messages for which the GBAS ID (in the message block header) matches the GBAS ID in the header of the Type 2 message which contains the selected RSDS.

3.6.8.3.2 *Integrity*

3.6.8.3.2.1 *Bounding of aircraft errors*. For each satellite used in the navigation solution, the receiver shall compute a $\sigma_{receiver}$ such that a normal distribution with zero mean and a standard deviation equal to $\sigma_{receiver}$ bounds the receiver contribution to the corrected pseudo-range error as follows:

$$\int_{y}^{\infty} f(x)\,dx \le Q\left(\frac{y}{\sigma}\right) \text{ for all } \frac{y}{\sigma} \ge 0 \text{ and}$$

$$\int_{-\infty}^{-y} f(x)\,dx \le Q\left(\frac{y}{\sigma}\right) \text{ for all } \frac{y}{\sigma} \ge 0$$

where

f(x) = probability density function of the residual aircraft pseudo-range error and

$$Q(x) = \frac{1}{\sqrt{2\pi}} \int_{x}^{\infty} e^{-\frac{t^2}{2}}\,dt\,.$$

3.6.8.3.2.2 *Use of GBAS integrity parameters*. The aircraft element shall compute and apply the vertical, lateral and horizontal protection levels described in 3.6.5.5. If a $B_{i,j}$ parameter is set to the bit pattern "1000 0000" indicating that the measurement is not available, the aircraft element shall assume that $B_{i,j}$ has a value of zero. For any active service type, the aircraft element shall verify that the computed vertical and lateral protection levels are no larger than the corresponding vertical and lateral alert limits defined in 3.6.5.6.

3.6.8.3.3 *Use of satellite ephemeris data*

3.6.8.3.3.1 *IOD check*. The receiver shall only use satellites for which the IOD broadcast by GBAS in the Type 1 or Type 101 message matches the core satellite constellation IOD for the clock and ephemeris data used by the receiver.

3.6.8.3.3.2 *CRC check*. The receiver shall compute the ephemeris CRC for each core satellite constellation's ranging source used in the position solution. The computed CRC shall be validated against the ephemeris CRC broadcast in the Type 1 or Type 101 messages prior to use in the position solution and within one second of receiving a new broadcast CRC. The receiver shall immediately cease using any satellite for which the computed and broadcast CRC values fail to match.

3.6.8.3.3.3 *Ephemeris error position bounds*

3.6.8.3.3.3.1 *Ephemeris error position bounds for GBAS approach services*. If the ground subsystem provides additional data block 1 in the Type 2 messages, the aircraft element shall compute the ephemeris error position bounds defined in 3.6.5.8.1 for each core satellite constellation's ranging source used in the approach position solution within 1s of receiving the necessary broadcast parameters. The aircraft element shall verify that the computed vertical and lateral ephemeris error position bounds (VEB_j and LEB_j) are no larger than the corresponding vertical and lateral alert limits defined in 3.6.5.6.

3.6.8.3.3.3.2 *Ephemeris error position bound for the GBAS positioning service*. The aircraft element shall compute and apply the horizontal ephemeris error position bound (HEB_j) defined in 3.6.5.8.2 for each core satellite constellation's ranging source used in the positioning service position solution.

3.6.8.3.4 *Message loss*

3.6.8.3.4.1 For airborne equipment operating with GAST C as the active service type, the receiver shall provide an appropriate alert if no Type 1 message was received during the last 3.5 seconds.

3.6.8.3.4.2 For airborne equipment operating with GAST A or B as the active service type, the receiver shall provide an appropriate alert if no Type 1 and no Type 101 message was received during the last 3.5 seconds.

3.6.8.3.4.3 For the airborne equipment operating with GAST D as the active service type, the receiver shall provide an appropriate alert or modify the active service type if any of the following conditions are met:

a) The computed position solution is less than 200 ft above the LTP/FTP for the selected approach and no Type 1 message was received during the last 1.5 seconds.

b) The computed position solution is less than 200 ft above the LTP/FTP for the selected approach and no Type 11 message was received during the last 1.5 seconds.

c) The computed position solution is 200 ft or more above the LTP/FTP of the selected approach and no Type 1 message was received during the last 3.5 seconds.

d) The computed position solution is 200 ft or more above the LTP/FTP of the selected approach and no Type 11 message was received during the last 3.5 seconds.

3.6.8.3.4.4 For the GBAS positioning service using Type 1 messages, the receiver shall provide an appropriate alert if no Type 1 message was received during the last 7.5 seconds.

3.6.8.3.4.5 For the GBAS positioning service using Type 101 messages, the receiver shall provide an appropriate alert if no Type 101 message was received during the last 5 seconds.

3.6.8.3.5 *Airborne pseudo-range measurements*

3.6.8.3.5.1 *Carrier smoothing for airborne equipment*. Airborne equipment shall utilize the standard 100-second carrier smoothing of code phase measurements defined in 3.6.5.1. During the first 100 seconds after filter start-up, the value of shall be either:

a) a constant equal to the sample interval divided by 100 seconds; or

b) a variable quantity defined by the sample interval divided by the time in seconds since filter start-up.

3.6.8.3.5.2 *Carrier smoothing of airborne equipment operating with GAST D as the active service type*. Airborne equipment operating with GAST D as the active service type shall utilize 30-second carrier smoothing of code phase measurements as defined in 3.6.5.1.

Note.— For equipment that supports GAST D, two sets of smoothed pseudo-ranges are used. The form of the smoothing filter given in 3.6.5.1 is the same for both sets, and only the time constant differs (i.e. 100 seconds and 30 seconds). Guidance concerning carrier-smoothing for GAST D is given in Attachment D, 7.19.3.

3.6.8.3.6 *Service type specific differential position solution requirements*. The airborne equipment shall compute all position solutions in a manner that is consistent with the protocols for application of the data (see 3.6.5.5.1.1.2).

Note.— The general form for the weighting used in the differential position solution is given in 3.6.5.5.1.1.2. Exactly which information from the ground subsystem is used in the differential position solution depends on the type of service (i.e. positioning service vs. approach service) and the active approach service type. The specific requirements for each service type are defined in RTCA DO 253D. Additional information concerning the normal processing of position information is given in Attachment D, 7.19.

3.7 Resistance to interference

3.7.1 PERFORMANCE OBJECTIVES

Note 1.— For GNSS receivers not using differential corrections from an augmentation system, the resistance to interference is measured with respect to the following core satellite constellation performance parameters:

	Tracking error (1 sigma)
GPS L1 (single-frequency equipment)	*0.36 m*
GPS L1 (dual-frequency equipment)	*0.15 m*
GPS L5	*0.15 m*
*GPS L1-L5***	*0.40 m*
GLONASS L1OF	*0.80 m*
GLONASS L1OC	*0.30 m*
GLONASS L3OC	*0.10 m*
*GLONASS L1OC-L3OC***	*0.65 m*
*Galileo E1-E5a***	*0.40 m*

	Tracking error (1 sigma)
Galileo E1	*0.15 m*
Galileo E5a	*0.15 m*
BDS B1I	*0.60 m*
BDS B1C	*0.20 m*
BDS B2a	*0.15 m*
*BDS B1C-B2a***	*0.40 m*

* *The accuracy budget for the tracking error is specified for smoothed measurements.*
** *Refers to dual-frequency ionosphere-free pseudo-range measurements.*

Note 2.— This tracking error neither includes contributions due to signal propagation such as multipath, tropospheric and ionospheric effects nor ephemeris and GPS, GLONASS, Galileo and BDS satellite clock errors.

Note 3.— For SBAS receivers, the resistance to interference is measured with respect to parameters specified in 3.5.8.2.1, 3.5.8.4.1 and 3.5.15.3.2.

Note 4.— For GBAS receivers, the resistance to interference is measured with respect to parameters specified in 3.6.7.1.1 and 3.6.8.2.1.

Note 5.— The signal levels specified in this section are defined at the antenna port. Assumed maximum aircraft antenna gain in the lower hemisphere is –10 dBic.

Note 6.— The performance requirements are to be met in the interference environments defined below. This defined interference environment is relaxed during initial acquisition of GNSS signals when the receiver cannot take advantage of a steady-state navigation solution to aid signal acquisition.

Note 7.— If not specified, the equipment performance objectives and requirements specified for a particular constellation apply whether the equipment supports only that constellation (single constellation equipment) or that constellation and other constellation(s) (multiple constellation equipment).

3.7.2 CONTINUOUS WAVE (CW) INTERFERENCE

3.7.2.1 *GPS L1 AND SBAS L1 RECEIVERS*

Note.— Less interference power is tolerated by the interference thresholds for GPS L1 and SBAS L1 receivers than for the dual-frequency L1/L5 receivers in the band 1 480 – 1 565 MHz described in 3.7.2.3.

3.7.2.1.1 After steady-state navigation has been established, GPS L1 and SBAS L1 receivers shall meet the performance objectives with CW interfering signals present with a power level at the antenna port equal to the interference thresholds specified in Table B-156 and shown in Figure B-31 and with a desired GPS L1 and SBAS L1 level of –164 dBW at the antenna port.

3.7.2.1.2 During initial acquisition of the GPS L1 and SBAS L1 signals prior to steady-state navigation, GPS L1 and SBAS L1 receivers shall meet the performance objectives with interference thresholds 6 dB less than those specified in Table B-156.

3.7.2.2 *GLONASS RECEIVERS*

3.7.2.2.1 After steady-state navigation has been established, GLONASS FDMA signals receivers in L1 band (except those identified in 3.7.2.2.1.1) shall meet the performance objectives with CW interfering signals present with a power level at the antenna port equal to the interference thresholds specified in Table B-157 and shown in Figure B-32 and with a desired signal level –166.5 dBW at the antenna port.

Table B-156. CW interference thresholds for GPS L1 and SBAS L1 receivers in steady-state navigation

Frequency range f_i of the interference signal	*Interference thresholds for receivers in steady-state navigation*
$f_i \leq 1\ 315$ MHz	–4.5 dBW
1 315 MHz < $f_i \leq 1\ 500$ MHz	Linearly decreasing from –4.5 dBW to –38 dBW
1 500 MHz < $f_i \leq 1\ 525$ MHz	Linearly decreasing from –38 dBW to –42 dBW
1 525 MHz < $f_i \leq 1\ 565.42$ MHz	Linearly decreasing from –42 dBW to –150.5 dBW
1 565.42 MHz < $f_i \leq 1\ 585.42$ MHz	–150.5 dBW
1 585.42 MHz < $f_i \leq 1\ 610$ MHz	Linearly increasing from –150.5 dBW to –60 dBW
1 610 MHz < $f_i \leq 1\ 618$ MHz	Linearly increasing from –60 dBW to –42 dBW*
1 618 MHz < $f_i \leq 2\ 000$ MHz	Linearly increasing from –42 dBW to –8.5 dBW*
1 618 MHz < $f_i \leq 1\ 626.5$ MHz	Linearly increasing from –60 dBW to –22 dBW**
1 626.5 MHz < $f_i \leq 2\ 000$ MHz	Linearly increasing from –22 dBW to –8.5 dBW**
$f_i > 2\ 000$ MHz	–8.5 dBW

* Applies to aircraft installations where there are no on-board satellite communications.
** Applies to aircraft installations where there are on-board satellite communications.

3.7.2.2.1.1 After steady-state navigation has been established, GLONASS FDMA signals receivers in L1 band used for all phases of flight (excluding those used for the precision approach phase of flight) and put into operation before 1 January 2017 shall meet the performance objectives with CW interfering signals present with a power level at the antenna port 3 dB less than the interference thresholds specified in Table B-157 and shown in Figure B-32 and with a desired signal level of –166.5 dBW at the antenna port.

Table B-157. CW interference thresholds for GLONASS FDMA signals receivers in L1 band in steady-state navigation

Frequency range f_i of the interference signal	*Interference thresholds for receivers in steady-state navigation*
$f_i \leq 1\ 315$ MHz	–4.5 dBW
1 315 MHz < $f_i \leq 1\ 562.15625$ MHz	Linearly decreasing from –4.5 dBW to –42 dBW
1 562.15625 MHz < $f_i \leq 1\ 583.65625$ MHz	Linearly decreasing from –42 dBW to –80 dBW
1 583.65625 MHz < $f_i \leq 1\ 592.9525$ MHz	Linearly decreasing from –80 dBW to –149 dBW
1 592.9525 MHz < $f_i \leq 1\ 609.36$ MHz	–149 dBW
1 609.36 MHz < $f_i \leq 1\ 613.65625$ MHz	Linearly increasing from –149 dBW to –80 dBW
1 613.65625 MHz < $f_i \leq 1\ 635.15625$ MHz	Linearly increasing from –80 dBW to –42 dBW*
1 613.65625 MHz < $f_i \leq 1\ 626.15625$ MHz	Linearly increasing from –80 dBW to –22 dBW**
1 635.15625 MHz < $f_i \leq 2\ 000$ MHz	Linearly increasing from –42 dBW to –8.5 dBW*
1 626.15625 MHz < $f_i \leq 2\ 000$ MHz	Linearly increasing from –22 dBW to –8.5 dBW**
$f_i > 2\ 000$ MHz	–8.5 dBW

* Applies to aircraft installations where there are no on-board satellite communications.
** Applies to aircraft installations where there is on-board satellite communications.

3.7.2.2.1.2 After steady-state navigation has been established, GLONASS CDMA signals receivers in L1 and L3 bands shall meet the performance objectives with CW interfering signals present with a power level at the antenna port equal to the interference thresholds specified in Tables B-158 and B-159 and shown in Figures B-33 and B-34 and with a desired signal level of –161.5 dBW at the antenna port.

Table B-158. CW interference thresholds for GLONASS CDMA signals receivers in L1 band in steady-state navigation

Frequency range f_i of the interference signal	*Interference thresholds for receivers in steady-state navigation*
$f_i \leq 1\ 315$ MHz	–4.5 dBW
1 315 MHz < $f_i \leq 1\ 562.15625$ MHz	Linearly decreasing from –4.5 dBW to –42 dBW
1 562.15625 MHz < $f_i \leq 1\ 583.65625$ MHz	Linearly decreasing from –42 dBW to –80 dBW
1 583.65625 MHz < $f_i \leq 1\ 592.9525$ MHz	Linearly decreasing from –80 dBW to –149 dBW
1 592.9525 MHz < $f_i \leq 1\ 609.36$ MHz	–149 dBW
1 609.36 MHz < $f_i \leq 1\ 613.65625$ MHz	Linearly increasing from –149 dBW to –80 dBW
1 613.65625 MHz < $f_i \leq 1\ 635.15625$ MHz	Linearly increasing from –80 dBW to –42 dBW*
1 613.65625 MHz < $f_i \leq 1\ 626.15625$ MHz	Linearly increasing from –80 dBW to –22 dBW**

Frequency range f_i of the interference signal	*Interference thresholds for receivers in steady-state navigation*
1 635.15625 MHz < f_i ≤ 2 000 MHz	Linearly increasing from –42 dBW to –8.5 dBW*
1 626.15625 MHz < f_i ≤ 2 000 MHz	Linearly increasing from –22 dBW to –8.5 dBW**
f_i > 2 000 MHz	–8.5 dBW

* Applies to aircraft installations where there are no on-board satellite communications.
** Applies to aircraft installations where there are on-board satellite communications.

Table B-159. CW interference thresholds for GLONASS CDMA signals receivers in L3 band in steady-state navigation

Frequency range f_i of the interference signal	*Interference thresholds for receivers in steady-state navigation*
f_i ≤ 908 MHz	–4.5 dBW
908 MHz < f_i ≤ 1 155.775 MHz	Linearly decreasing from –4.5 dBW to –42 dBW
1 155.775 MHz < f_i ≤ 1 178.775 MHz	Linearly decreasing from –42 dBW to –73 dBW
1 178.775 MHz < f_i ≤ 1 191.775 MHz	Linearly decreasing from –73 dBW to –143 dBW
1 191.775 MHz < f_i ≤ 1 212.275 MHz	–143 dBW
1 212.275 MHz < f_i ≤ 1 224.875 MHz	Linearly increasing from –143 dBW to –73 dBW
1 224.875 MHz < f_i ≤ 1 244.375 MHz	Linearly increasing from –73 dBW to –42 dBW
1 244.375 MHz < f_i ≤ 1 492.125 MHz	Linearly increasing from –42 dBW to –4.5 dBW
f_i > 1 492.125 MHz	–4.5 dBW

3.7.2.2.2 During initial acquisition of the GLONASS FDMA signals in L1 band prior to steady-state navigation, GLONASS receivers shall meet the performance objectives with interference thresholds 6 dB less than those specified in Table B-157.

3.7.2.2.2.1 During initial acquisition of the GLONASS CDMA signals in L1 and L3 bands prior to steady-state navigation, GLONASS receivers shall meet the performance objectives with interference thresholds 6 dB less than those specified in Tables B-158 and B-159.

3.7.2.3 *GPS L1/L5, GALILEO E1/E5A AND DFMC SBAS receivers*

3.7.2.3.1 During initial L5/E5a acquisition prior to steady-state navigation, and after steady-state navigation has been established, DFMC SBAS receivers processing signals centred on L1/E1 and L5/E5a frequencies shall meet the performance objectives with CW interfering signals present with a power level at the antenna port equal to the interference thresholds specified in Table B-160 and shown in Figure B-35, and with a desired SBAS L5 signal level of –162.5 dBW, with a desired GPS L5 signal level of –159.4 dBW, and with a desired Galileo E5a signal level of –160.4 dBW at the antenna port.

3.7.2.3.2 After steady-state navigation has been established, DFMC SBAS receivers processing signals centred on L1/E1 and L5/E5a frequencies shall meet the performance objectives with CW interfering signals present with a power level at the antenna port equal to the interference thresholds specified in Table B-160 and shown in Figure B-35, and with a desired GPS L1 and SBAS L1 signal level of –163 dBW and with a desired Galileo E1 signal level of –162.25 dBW at the antenna port. During initial L1/E1 acquisition, DFMC SBAS receivers shall meet the performance objectives with interference levels that are 6 dB below what is specified in Table B-160.

Note.— CW interference thresholds for DMFC SBAS receivers determine the interference power levels applicable for the frequency ranges defined in Table B-160.

Table B-160. CW interference thresholds for GPS L1/L5, Galileo E1/E5a and DFMC SBAS receivers

Frequency range f_i of the interference signal	*Interference thresholds for receivers*
$f_i \leq 1\,000$ MHz	–21 dBW
1 000 MHz < $f_i \leq$ 1 100.45 MHz	Linearly decreasing from –21 dBW to –44 dBW
1 100.45 MHz < $f_i \leq$ 1 148.45 MHz	Linearly decreasing from –44 dBW to –54 dBW
1 148.45 MHz < $f_i \leq$ 1 166.45 MHz	Linearly decreasing from –54 dBW to –145 dBW
1 166.45 MHz < $f_i \leq$ 1 186.45 MHz	–145 dBW
1 186.45 MHz < $f_i \leq$ 1 205.45 MHz	Linearly increasing from –145 dBW to –54 dBW
1 205.45 MHz < $f_i \leq$ 1 252.45 MHz	Linearly increasing from –54 dBW to –43 dBW
1 252.45 MHz < $f_i \leq$ 1 315 MHz	Linearly increasing from –43 dBW to –39 dBW
1 315 MHz < $f_i \leq$ 1 525 MHz	Linearly increasing from –39 dBW to –31.5 dBW
1 525 MHz < $f_i \leq$ 1 531 MHz	Linearly decreasing from –31.5 dBW to –34 dBW
1 531 MHz < $f_i \leq$ 1 536 MHz	Linearly decreasing from –34 dBW to –65 dBW
1 536 MHz < $f_i \leq$ 1 565.42 MHz	Linearly decreasing from –65 dBW to –150.5 dBW
1 565.42 MHz < $f_i \leq$ 1 585.42 MHz	–150.5 dBW
1 585.42 MHz < $f_i \leq$ 1 610 MHz	Linearly increasing from –150.5 dBW to –60 dBW
1 610 MHz < $f_i \leq$ 1 618 MHz	Linearly increasing from –60 dBW to –42 dBW
1 618 MHz < $f_i \leq$ 2 000 MHz	Linearly increasing from –42 dBW to –12 dBW*
1 618 MHz < $f_i \leq$ 1 626.5 MHz	Linearly increasing from –42 dBW to –22 dBW*
1 626.5 MHz < $f_i \leq$ 2 000 MHz	Linearly increasing from –22 dBW to –12 dBW**
$f_i >$ 2 000 MHz	–12 dBW**

* Applies to aircraft installations where there are no on-board satellite communications.
** Applies to aircraft installations where there are on-board satellite communications.

3.7.2.4 *BDS RECEIVERS*

3.7.2.4.1 After steady-state navigation has been established, BDS B1I receivers shall meet the performance objectives with CW interfering signals present with a power level at the antenna port equal to the interference thresholds specified in Table B-161 and shown in Figure B-36A and with a desired BDS signal level of –164.5 dBW at the antenna port. During initial acquisition prior to steady state navigation, BDS B1I receivers shall meet the performance objectives with 6 dB less than those specified in Table B-161.

3.7.2.4.2 After steady-state navigation has been established, BDS B1C/B2a receivers shall meet the performance objectives with a power level at the antenna port equal to the interference thresholds specified in Table B-162 and shown in Figure B-36B and with desired BDS signal levels of –163.5 dBW for B1C and –160.5 dBW for B2a at the antenna port. During initial acquisition prior to steady state navigation, BDS B1C/B2a receivers shall meet the performance objectives with 6 dB less than those specified in Table B-162.

Table B-161. CW interference thresholds for BDS B1I receivers in steady-state navigation

Frequency range f_i of the interference signal	*Interference thresholds for receivers in steady-state navigation*
$f_i \leq 1\ 465$ MHz	–18 dBW
1 465 MHz < $f_i \leq 1\ 528$ MHz	Linearly decreasing from –18 dBW to –30 dBW
1 528 MHz < $f_i \leq 1\ 559.052$ MHz	Linearly decreasing from –30 dBW to –150.5 dBW
1 559.052 MHz < $f_i \leq 1\ 563.144$ MHz	–150.5 dBW
1 563.144 MHz < $f_i \leq 1\ 610$ MHz	Linearly increasing from –150.5 dBW to –60 dBW
1 610 MHz < $f_i \leq 1\ 618$ MHz	Linearly increasing from –60 dBW to –42 dBW*
1 618 MHz < $f_i \leq 2\ 000$ MHz	Linearly increasing from –42 dBW to –8.5 dBW*
1 610 MHz < $f_i \leq 1\ 626.5$ MHz	Linearly increasing from –60 dBW to –22 dBW**
1 626.5 MHz < $f_i \leq 2\ 000$ MHz	Linearly increasing from –22 dBW to –8.5 dBW**
$f_i > 2\ 000$ MHz	–8.5 dBW

* Applies to aircraft installations where there are no on-board satellite communications.
** Applies to aircraft installations where there are on-board satellite communications.

Table B-162. CW interference thresholds for BDS B1C/B2a receivers in steady-state navigation

Frequency range f_i of the interference signal	*Interference thresholds for receivers*
$f_i \leq 1\ 000$ MHz	–24 dBW
1 000 MHz < $f_i \leq 1\ 100.45$ MHz	Linearly decreasing from –24 dBW to –44 dBW
1 100.45 MHz < $f_i \leq 1\ 148.45$ MHz	Linearly decreasing from –44 dBW to –54 dBW
1 148.45 MHz < $f_i \leq 1\ 166.45$ MHz	Linearly decreasing from –54 dBW to –145 dBW
1 166.45 MHz < $f_i \leq 1\ 186.45$ MHz	–145 dBW
1 186.45 MHz < $f_i \leq 1\ 205.45$ MHz	Linearly increasing from –145 dBW to –54 dBW
1 205.45 MHz < $f_i \leq 1\ 252.45$ MHz	Linearly increasing from –54 dBW to –43 dBW
1 252.45 MHz < $f_i \leq 1\ 315$ MHz	Linearly increasing from –43 dBW to –39 dBW
1 315 MHz < $f_i \leq 1\ 525$ MHz	Linearly increasing from –39 dBW to –31.5 dBW
1 525 MHz < $f_i \leq 1\ 531$ MHz	Linearly decreasing from –31.5 dBW to –34 dBW
1 531 MHz < $f_i \leq 1\ 536$ MHz	Linearly decreasing from –34 dBW to –65 dBW
1 536 MHz < $f_i \leq 1\ 565.42$ MHz	Linearly decreasing from –65 dBW to –150.5 dBW
1 565.42 MHz < $f_i \leq 1\ 585.42$ MHz	–150.5 dBW
1 585.42 MHz < $f_i \leq 1\ 610$ MHz	Linearly increasing from –150.5 dBW to –60 dBW
1 610 MHz < $f_i \leq 1\ 618$ MHz	Linearly increasing from –60 dBW to –42 dBW*
1 618 MHz < $f_i \leq 2\ 000$ MHz	Linearly increasing from –42 dBW to –8.5 dBW*
1 618 MHz < $f_i \leq 1\ 626.5$ MHz	Linearly increasing from –60 dBW to –22 dBW**
1 626.5 MHz < $f_i \leq 2\ 000$ MHz	Linearly increasing from –22 dBW to –8.5 dBW**
$f_i > 2\ 000$ MHz	–8.5 dBW

* Applies to aircraft installations where there are no on-board satellite communications.
** Applies to aircraft installations where there are on-board satellite communications.

3.7.3 BAND-LIMITED NOISE-LIKE INTERFERENCE

3.7.3.1 *GPS L1 AND SBAS L1 RECEIVERS*

3.7.3.1.1 After steady-state navigation has been established, GPS L1 and SBAS L1 receivers shall meet the performance objectives with noise-like interfering signals present in the frequency range of 1 575.42 MHz $\pm Bw_i/2$ and with power levels at the antenna port equal to the interference thresholds specified in Table B-169 and shown in Figure B-37 and with the desired signal level of –164 dBW at the antenna port.

Note.— Bw_i is the equivalent noise bandwidth of the interference signal.

3.7.3.1.2 During initial acquisition of the GPS L1 and SBAS L1 signals prior to steady-state navigation, GPS L1 and SBAS L1 receivers shall meet the performance objectives with interference thresholds 6 dB less than those specified in Table B-83.

3.7.3.2 *GLONASS RECEIVERS*

3.7.3.2.1 After steady-state navigation has been established, GLONASS FDMA signals receivers in L1 band (except those identified in 3.7.3.2.1.1) shall meet the performance objectives while receiving noise-like interfering signals in the frequency band $f_k \pm Bw_i/2$, with power levels at the antenna port equal to the interference thresholds specified in Table B-170 and shown in Figure B-38 and with a desired signal level of –166.5 dBW at the antenna port.

3.7.3.2.1.1 After steady-state navigation has been established, GLONASS FDMA signals receivers in L1 band used for all phases of flight (excluding those used for the precision approach phase of flight) and put into operation before 1 January 2017 shall meet the performance objectives while receiving noise-like interfering signals in the frequency band $f_k \pm Bw_i/2$, with power levels at the antenna port 3 dB less than the interference thresholds specified in Table B-170 and shown in Figure B-38 and with a desired signal level of –166.5 dBW at the antenna port.

Note.— f_k is the centre frequency of a GLONASS channel with f_k = 1 602 MHz + k × 0.5625 MHz and k = –7 to + 6 as defined in Table B-15 and Bw_i is the equivalent noise bandwidth of the interference signal.

3.7.3.2.1.2 After steady-state navigation has been established, GLONASS CDMA signals receivers in L1 and L3 bands shall meet the performance objectives while receiving noise-like interfering signals in the frequency band $f_k \pm Bw_i/2$, with power levels at the antenna port equal to the interference thresholds specified in Tables B-163 and B-164 and shown in Figures B-39 and B-40 and with a desired signal level of –161.5 dBW at the antenna port.

3.7.3.2.2 During initial acquisition of the GLONASS FDMA signals receivers in L1 band prior to steady-state navigation, GLONASS receivers shall meet the performance objectives with interference thresholds 6 dB less than those specified in Table B-170.

3.7.3.2.2.1 During initial acquisition of the GLONASS CDMA signals in L1 and L3 bands prior to steady-state navigation, GLONASS receivers shall meet the performance objectives with interference thresholds 6 dB less than those specified in Tables B-163 and B-164.

Table B-163. Interference threshold for band-limited noise-like interference to GLONASS CDMA L1 signals receivers in L1 band in steady-state navigation

Interference bandwidth	*Interference threshold*
$0 \text{ Hz} < Bw_i \leq 1 \text{ kHz}$	–149 dBW
$1 \text{ kHz} < Bw_i \leq 10 \text{ kHz}$	Linearly increasing from –149 to –143 dBW
$10 \text{ kHz} < Bw_i \leq 0.5 \text{ MHz}$	–143 dBW
$0.5 \text{ MHz} < Bw_i \leq 10 \text{ MHz}$	Linearly increasing from –143 to –130 dBW
$10 \text{ MHz} < Bw_i$	–130 dBW

Table B-164. Interference threshold for band-limited noise-like interference to GLONASS CDMA signals receivers in L3 band in steady-state navigation

Interference bandwidth	*Interference threshold*
0 Hz < Bw_i ≤ 1 kHz	–143 dBW
1 kHz < Bw_i ≤ 1 MHz	Linearly increasing from –143 to –140 dBW
1 MHz < Bw_i ≤ 20 MHz	Linearly increasing from –140 to –126.9 dBW
20 MHz < Bw_i	–126.9 dBW

3.7.3.3 *GPS L1/L5, GALILEO E1/E5A AND DFMC SBAS RECEIVER*

3.7.3.3.1 During initial L5/E5a acquisition prior to steady-state navigation, and after steady-state navigation has been established, GPS L1/L5, Galileo E1/E5a and DFMC SBAS receivers processing signals centred on L1/E1 and L5/E5a frequencies shall meet the performance objectives with noise-like interfering signals present in the frequency range of 1 176.45 MHz ±Bw_i/2 and with power levels at the antenna port equal to the interference thresholds specified in Table B-165 and shown in Figure B-41 and with a desired SBAS L5 signal level of –162.5 dBW, with a desired GPS L5 level of –159.4 dBW and with a desired Galileo E5a level of –160.4 dBW at the output of the antenna.

Note.— Bw_i is the equivalent noise bandwidth of the interference signal.

3.7.3.3.2 After steady-state navigation has been established, GPS L1/L5, Galileo E1/E5a and DFMC SBAS receivers processing signals centred on L1/E1 and L5/E5a frequencies shall meet the performance objectives with noise-like interfering signals present in the frequency range of 1 575.42 MHz ±Bw_i/2 and with power levels at the antenna port equal to the interference thresholds specified in Table B-169 and shown in Figure B-37 and with the desired GPS and SBAS L1 signal levels of –163 dBW and with the desired Galileo E1 signal level of –162.25 dBW at the antenna port. During initial L1/E1 acquisition, DFMC SBAS receivers shall meet the performance objectives with interference thresholds 6 dB less than those specified in Table B-83.

Note.— Bw_i is the equivalent noise bandwidth of the interference signal.

Table B-165. Interference threshold for band-limited noise-like interference to GPS L1/L5, Galileo E1/E5A and DFMC SBAS receivers

Interference bandwidth	*Interference threshold for receivers*
0 Hz < Bw_i ≤ 1kHz	–145.0 dBW
1 kHz < Bw_i ≤ 10 kHz	Linearly increasing from –145.0 to –137.5 dBW
10 kHz < Bw_i ≤ 100 kHz	Linearly increasing from –137.5 to –133.9 dBW
100 kHz < Bw_i ≤ 1 MHz	Linearly increasing from –133.9 to –133.0 dBW
1 MHz < Bw_i ≤ 10 MHz	Linearly increasing from –133.0 to –131.7 dBW*
10 MHz < Bw_i ≤ 40 MHz	Linearly increasing from –131.7 to –127.0 dBW*

* *The interference threshold is not to exceed –134.0 dBW/MHz in the frequency range 1 176.45 ±10 MHz.*

3.7.3.4 *BDS RECEIVERS*

3.7.3.4.1 After steady-state navigation has been established, BDS B1I receivers shall meet the performance objectives with noise like interfering signals present in the frequency range of 1561.098 MHz ±Bw_i/2 and with power levels at the antenna port equal to the interference thresholds specified in Table B-166 and shown in Figure B-42A and with a desired B1I signal level of –164.5 dBW at the output of the antenna. During initial acquisition of the BDS B1I signals prior to steady-state navigation, BDS receivers shall meet the performance objectives with interference thresholds 6 dB less than those specified in Table B-166.

Note.— Bw_i is the equivalent noise bandwidth of the interference signal.

3.7.3.4.2 After steady-state navigation has been established, BDS B1C receivers shall meet the performance objectives with noise-like interfering signals present in the frequency range of 1 575.42 MHz ±Bw_i/2 and with power levels at the antenna port equal to the interference thresholds specified in Table B-167 and shown in Figure B-42B and with a desired B1C signal level of –163.5 dBW at the output of the antenna. During initial acquisition of the BDS B1C signals prior to steady-state navigation, BDS receivers shall meet the performance objectives with interference thresholds 6 dB less than those specified in Table B-167.

Note.— Bw_i is the equivalent noise bandwidth of the interference signal.

Table B-166. Interference threshold for band-limited noise-like interference to BDS B1I receivers in steady-state navigation

Interference bandwidth	*Interference threshold for receivers in steady-state navigation*
0 Hz < Bw_i ≤ 700 Hz	–150.5 dBW
700 Hz < Bw_i ≤ 10 kHz	Linearly increasing from –150.5 dBW to –143.5 dBW
10 kHz < Bw_i ≤ 100 kHz	Linearly increasing from –143.5 dBW to –140.5 dBW
100 kHz < Bw_i ≤ 1 MHz	–140.5 dBW
1 MHz < Bw_i ≤ 4.096 MHz	Linearly increasing from –140.5 dBW to –134.4 dBW
4.096 MHz < Bw_i ≤ 10 MHz	Linearly increasing from –134.4 dBW to –126 dBW
10 MHz < Bw_i	–126.0 dBW

* *The interference threshold is not to exceed –140.5 dBW/MHz in the frequency range 1 561.098 ± 2.046 MHz.*

Table B-167. Interference threshold for band-limited noise-like interference to BDS B1C receivers in steady-state navigation

Interference bandwidth	*Interference threshold for receivers in steady-state navigation*
0 Hz < Bw_i ≤ 700 Hz	–150.5 dBW
700 Hz < Bw_i ≤ 10 kHz	Linearly increasing from –150.5 to –143.5 dBW
10 kHz < Bw_i ≤ 100 kHz	Linearly increasing from –143.5 to –140.5 dBW
100 kHz < Bw_i ≤ 1 MHz	–140.5 dBW
1 MHz < Bw_i ≤ 20 MHz	Linearly increasing from –140.5 to –127.5 dBW*
20 MHz < Bw_i ≤ 30 MHz	Linearly increasing from –127.5 to –121.1 dBW*
30 MHz < Bw_i ≤ 40 MHz	Linearly increasing from –121.1 to –119.5 dBW*
40 MHz < Bw_i	–119.5 dBW*

* *The interference threshold is not to exceed –140.5 dBW/MHz in the frequency range 1 575.42 ±10 MHz.*

3.7.3.4.3 After steady-state navigation has been established, BDS B2a receivers shall meet the performance objectives with noise-like interfering signals present in the frequency range of 1 176.45 MHz ±Bw_i/2 and with power levels at the antenna port equal to the interference thresholds specified in Table B-168 and shown in Figure B-42C and with a desired B2a signal level of –160.5 dBW at the output of the antenna. During initial acquisition of the BDS B2a signals prior to steady-state navigation, BDS receivers shall meet the performance objectives with interference thresholds 6 dB less than those specified in Table B-168.

Note.— Bw_i is the equivalent noise bandwidth of the interference signal.

Table B-168. Interference threshold for band-limited noise-like interference to BDS B2a receivers in steady-state navigation

Interference bandwidth	*Interference threshold for receivers in steady-state navigation*
0 Hz < Bw_i ≤ 1kHz	–145.0 dBW
1 kHz < Bw_i ≤ 10 kHz	Linearly increasing from –145.0 to –137.5 dBW
10 kHz < Bw_i ≤ 100 kHz	Linearly increasing from –137.5 to –133.9 dBW
100 kHz < Bw_i ≤ 1 MHz	Linearly increasing from –133.9 to –133.0 dBW
1 MHz < Bw_i ≤ 10 MHz	Linearly increasing from –133.0 to –131.7 dBW*
10 MHz < Bw_i≤ 40 MHz	Linearly increasing from –131.7 to –127.0 dBW*

* *The interference threshold is not to exceed –134.0 dBW/MHz in the frequency range 1 176.45 ±10 MHz.*

3.7.3.5 *Pulsed interference.* After steady-state navigation has been established, the GNSS receiver shall meet the performance objectives while receiving pulsed interference signals with characteristics according to Table B-171 where the interference threshold is defined at the antenna port.

3.7.3.6 GNSS receivers shall not output misleading information in the presence of interference including interference levels above those specified in 3.7.

Note.— Guidance material on this requirement is given in Attachment D, 10.5.

3.8 GNSS aircraft satellite receiver antenna

3.8.1 *Antenna coverage*. The GNSS antenna shall meet the performance requirements for the reception of GNSS satellite signals from 0 to 360 degrees in azimuth and from 0 to 90 degrees in elevation relative to the horizontal plane of an aircraft in level flight.

3.8.2 *Antenna gain*. The minimum passive antenna element gain for single-frequency antennas shall not be less than that shown in Table B-172 for the specified elevation angle above the horizon. For these antennas, the maximum passive antenna element gain shall not exceed +4 dBic for elevation angles above 5 degrees. The minimum passive antenna element gains at both frequencies for dual-frequency antennas shall comply with Table B-173 for the specified elevation angles above the horizon. For these antennas, the maximum passive antenna element gain shall be limited to +4 dBic for elevation angles above 75 degrees.

3.8.3 *Polarization*. The GNSS antenna polarization shall be right-hand circular (clockwise with respect to the direction of propagation).

3.8.3.1 *Axial ratio*. For single-frequency antennas, the axial ratio shall not exceed 3.0 dB as measured at boresight. For dual-frequency antennas, the axial ratio shall be less than or equal to 3 dB over the operating frequency range as measured in a region extending from boresight down to 40 degrees off boresight across all azimuth angles.

3.9 Cyclic redundancy check

Each CRC shall be calculated as the remainder, R(x), of the Modulo-2 division of two binary polynomials as follows:

$$\left\{\frac{[x^k M(x)]}{G(x)}\right\}_{\text{mod } 2} = Q(x) + \frac{R(x)}{G(x)}$$

where

k = the number of bits in the particular CRC;
M(x) = the information field, which consists of the data items to be protected by the particular CRC represented as a polynomial;
G(x) = the generator polynomial specified for the particular CRC;
Q(x) = the quotient of the division; and
R(x) = the remainder of the division, contains the CRC:

$$R(x) = \sum_{i=1}^{k} r_i x^{k-i} = r_1 x^{k-1} + r_2 x^{k-2} + \ldots + r_k x^0$$

Table B-169. Interference threshold for band-limited noise-like interference to GPS L1 and SBAS L1 receivers in steady-state navigation

Interference bandwidth	*Interference threshold for receivers in steady-state navigation*
0 Hz < Bw_i ≤ 700 Hz	–150.5 dBW
700 Hz < Bw_i ≤ 10 kHz	Linearly increasing from –150.5 to –143.5 dBW
10 kHz < Bw_i ≤ 100 kHz	Linearly increasing from –143.5 to –140.5 dBW
100 kHz < Bw_i ≤ 1 MHz	–140.5 dBW
1 MHz < Bw_i ≤ 20 MHz	Linearly increasing from –140.5 to –127.5 dBW*
20 MHz < Bw_i ≤ 30 MHz	Linearly increasing from –127.5 to –121.1 dBW*
30 MHz < Bw_i ≤ 40 MHz	Linearly increasing from –121.1 to –119.5 dBW*
40 MHz < Bw_i	–119.5 dBW*

** The interference threshold is not to exceed –140.5 dBW/MHz in the frequency range 1 575.42 ±10 MHz.*

Table B-170. Interference threshold for band-limited noise-like interference to GLONASS FDMA signals receivers in L1 band in steady-state navigation

Interference bandwidth	*Interference threshold*
0 Hz < Bw_i ≤ 1 kHz	–149 dBW
1 kHz < Bw_i ≤ 10 kHz	Linearly increasing from –149 to –143 dBW
10 kHz < Bw_i ≤ 0.5 MHz	–143 dBW
0.5 MHz < Bw_i ≤ 10 MHz	Linearly increasing from –143 to –130 dBW
10 MHz < Bw_i	–130 dBW

Table B-171. Interference thresholds for pulsed interference

	GPS L1, Galileo L1 and SBAS L1	*GLONASS FDMA*	*GLONASS CDMA*	*BDS B1C*	*BDS B1I*
Frequency range for in-band and near band	1 575.42 MHz ± 20 MHz	1 592.9525 MHz to 1 609.36 MHz	1 191.775 MHz to 1 212.275 MHz/ 1 592.9525 MHz to 1 609.36 MHz	1 575.42 MHz ± 20 MHz	1 561.98 MHz ± 2.046 MHz
Interference threshold (Pulse peak power) for in-band and near-band interference	–20 dBW	–20 dBW	–20 dBW / –20 dBW	–20 dBW	–20 dBW
Interference threshold (Pulse peak power) outside the in-band and near band frequency ranges (out of band interference)	0 dBW(*)	0 dBW	0 dBW / 0 dBW	0 dBW	0 dBW
Pulse width	≤125 µs	≤250 µs	≤250 µs / ≤250 µs	≤125 µs	≤125 µs
Pulse duty cycle	≤1%	≤1%	≤2% / ≤1%	≤1%	≤1%
Interference signal bandwidth for in band and near-band interference	≥1 MHz	≥500 kHz	≥1 MHz / ≥500 kHz	≥1 MHz	≥1 MHz

Note 1.— The interference signal is additive white Gaussian noise centred around the carrier frequency and with bandwidth and pulse characteristics specified in the table.

Note 2.— In-band, near-band and out-of-band interference refers to the centre frequency of the interference signal.

Note 3.— Out-of-band interference is interference, the centre frequency of which is located on either side from the centre frequency of the frequency range for in-band and near-band at a distance of at least 250 per cent of the bandwidth of this frequency range.

Note 4.— The signal bandwidth specifies the minimum bandwidth of the noise-like signal with a power as large as the interference threshold that is pulsed with the specified pulse width and duty cycle.

Note 5.— (*) When considering the L1 channel of an L1/L5 receiver, this value is related to non-aeronautical pulsed interferences with a carrier frequency within 1 215 MHz – 2 000 MHz. This table does not describe non-aeronautical pulsed interferences in the environment to be considered for the L5 channel in an L1/L5 receiver (see Attachment D, 4.4.5 for further guidance).

Table B-172. Minimum antenna gain – single-frequency antennas for GPS (L1), GLONASS (L1OF), BDS (B1C), BDS (B1I), and/or SBAS L1

Elevation angle degrees	*Minimum gain dBic*
0	– 7.0
5	– 5.5
10	– 4.0
15 to 90	– 2.5

Table B-173. Minimum antenna gain – dual-frequency antennas for GPS (L1/L5), GLONASS (L1OC/L3OC), Galileo (E1/E5a), BDS (B1C/B2a) and/or SBAS (L1/L5)

Elevation angle degrees	*Minimum gain dBic*
0	– 7.0
5	– 4.5
10	– 3.0
15	– 1.5
30	0.5
≥ 75	1.5

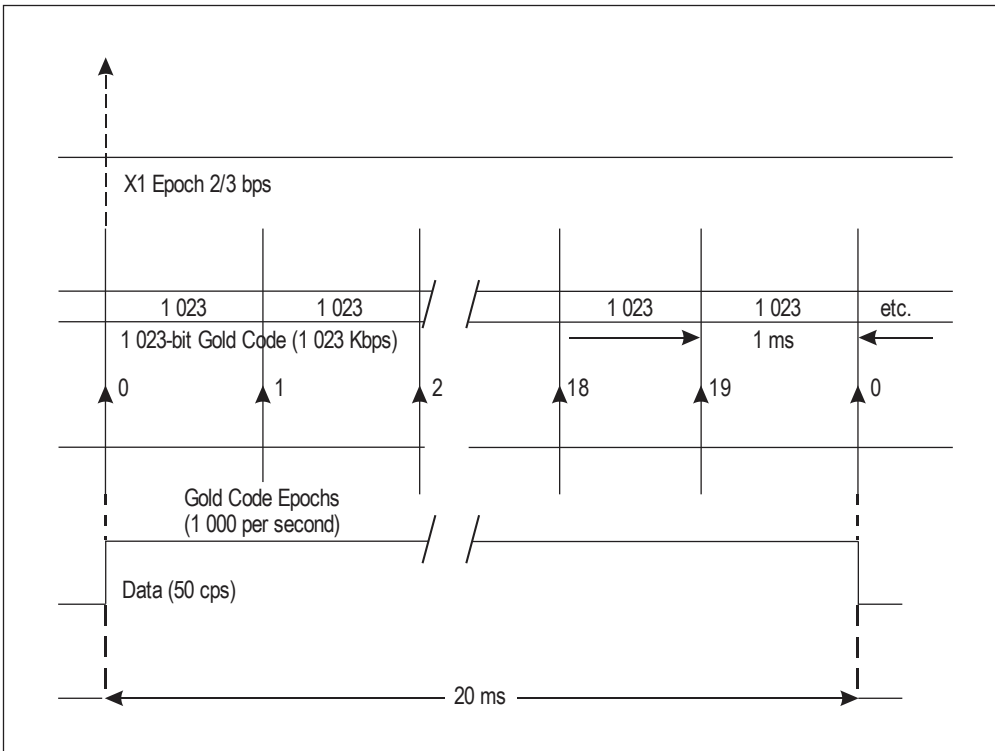

Figure B-1. C/A code timing relationships

SUBFRAME 1	TLM	HOW	GPS week number, SV accuracy and health
SUBFRAME 2	TLM	HOW	Ephemeris parameters
SUBFRAME 3	TLM	HOW	Ephemeris parameters
SUBFRAME 4 (25 pages)	TLM	HOW	Almanac and health for satellites 25–32, special messages, satellite configuration, flags, ionospheric and UTC
SUBFRAME 5 (25 pages)	TLM	HOW	Almanac and health for satellites 1–24 and almanac reference time and GPS week number

Figure B-2. Frame structure

Preamble								*Reserved*														*Parity*					
1	0	0	0	1	0	1	1	MSB													LSB						
1	2	3	4	5	6	7	8	9	10	11	12	13	14	15	16	17	18	19	20	21	22	23	24	25	26	27	28	29	30

Figure B-3. TLM word format

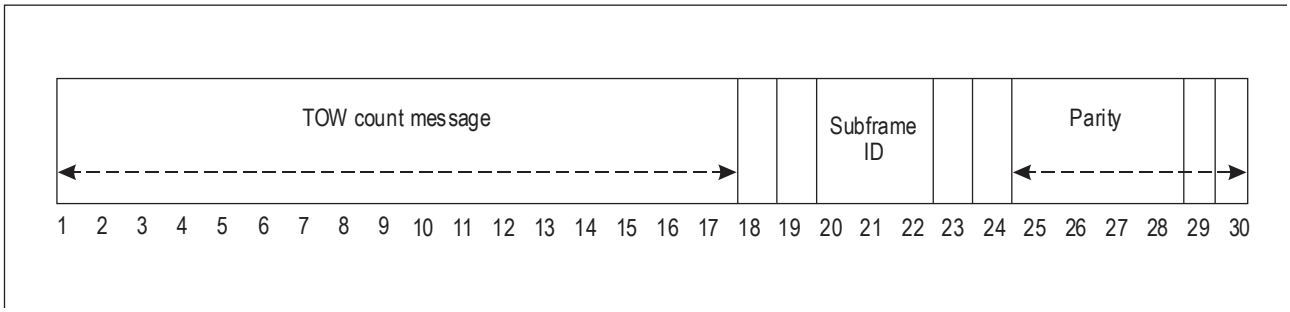

Figure B-4. HOW format

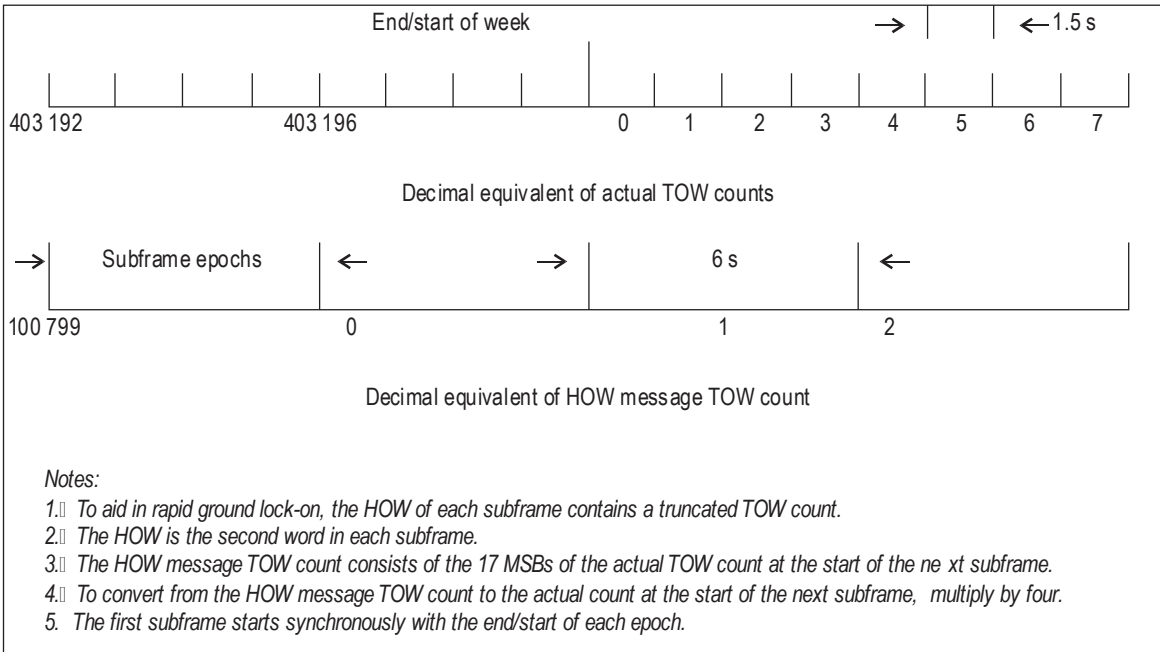

Figure B-5. Time line relationship of HOW

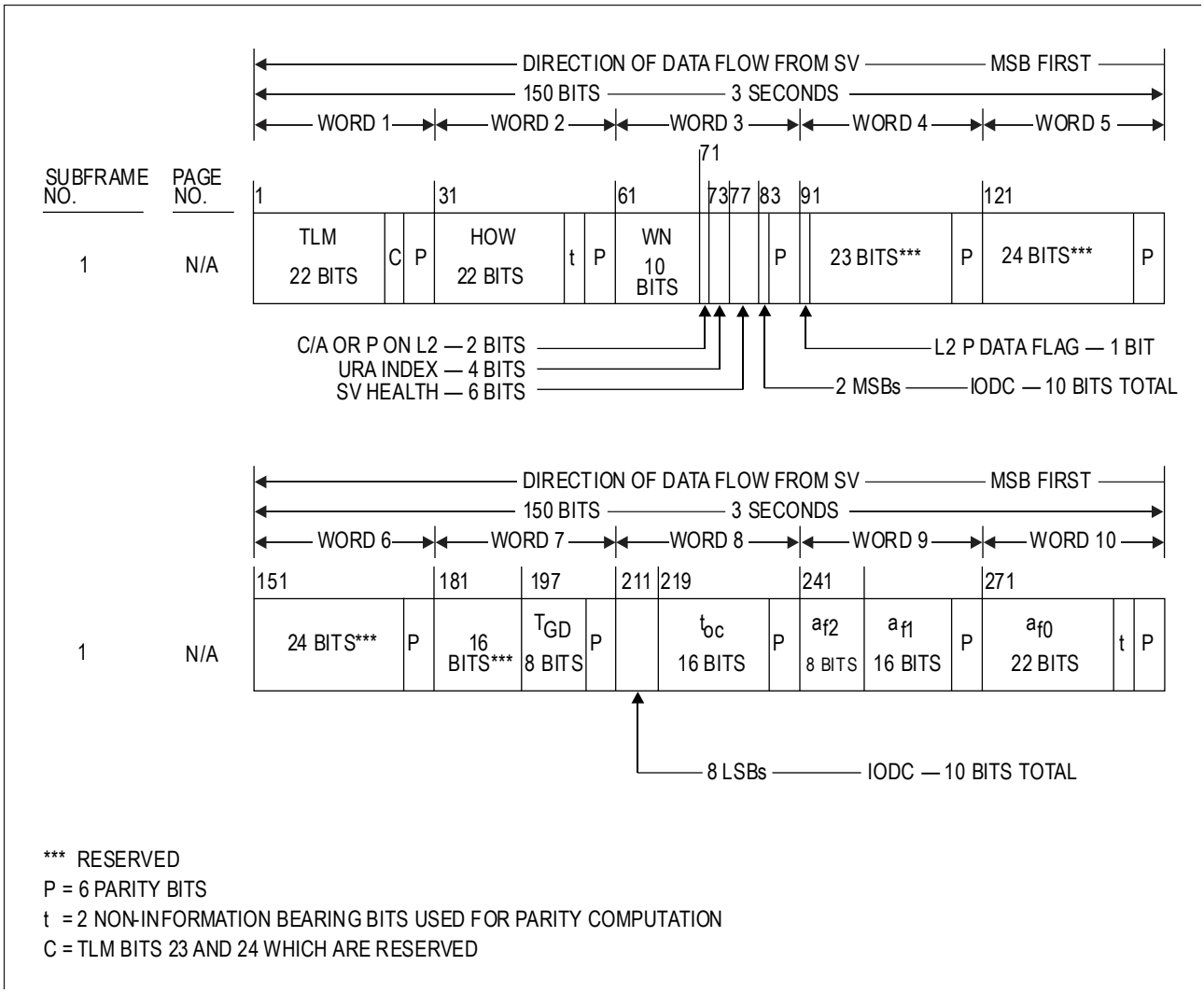

*** RESERVED
P = 6 PARITY BITS
t = 2 NON-INFORMATION BEARING BITS USED FOR PARITY COMPUTATION
C = TLM BITS 23 AND 24 WHICH ARE RESERVED

Figure B-6. Data format (1 of 11)

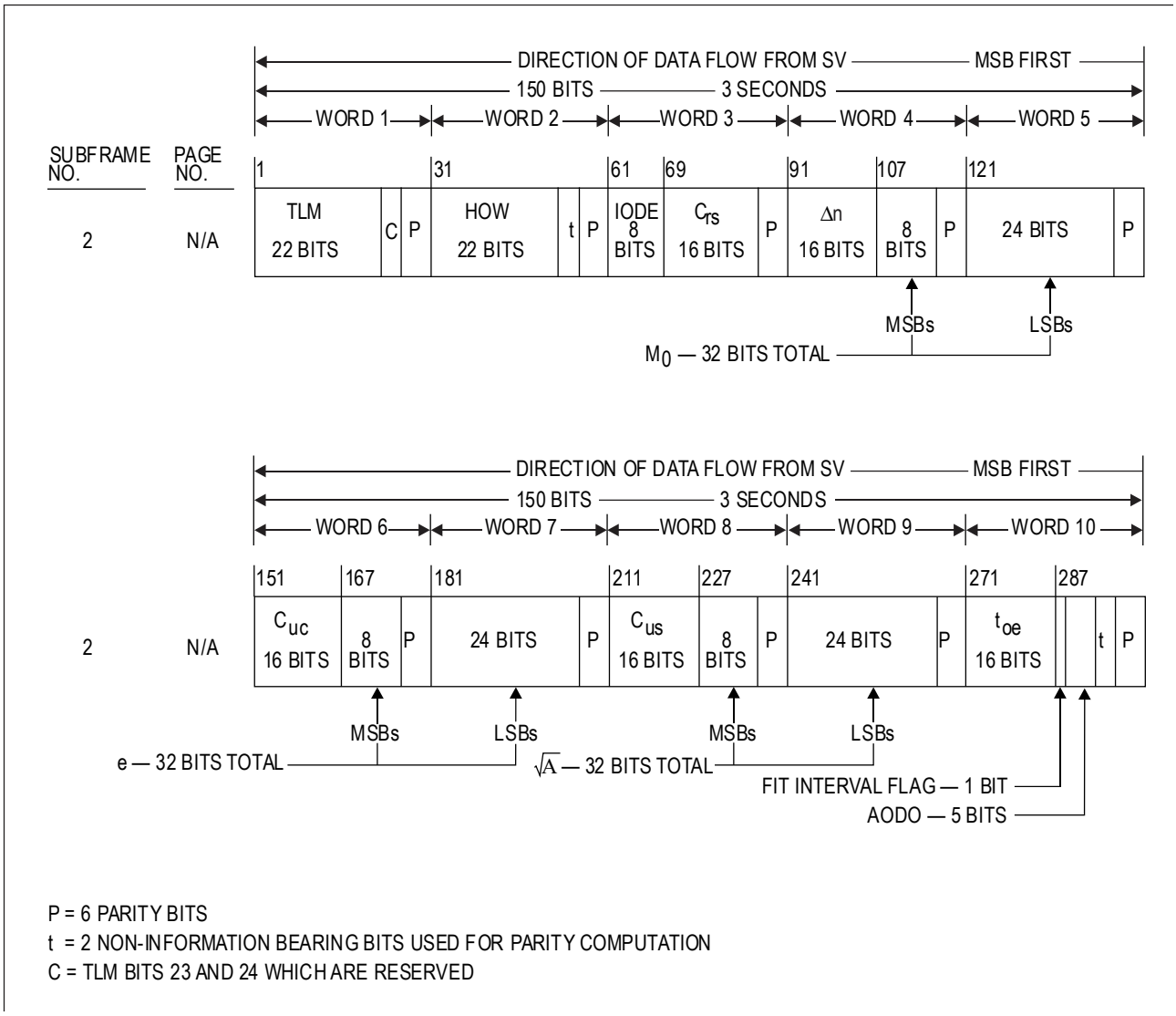

P = 6 PARITY BITS
t = 2 NON-INFORMATION BEARING BITS USED FOR PARITY COMPUTATION
C = TLM BITS 23 AND 24 WHICH ARE RESERVED

Figure B-6. Data format (2 of 11)

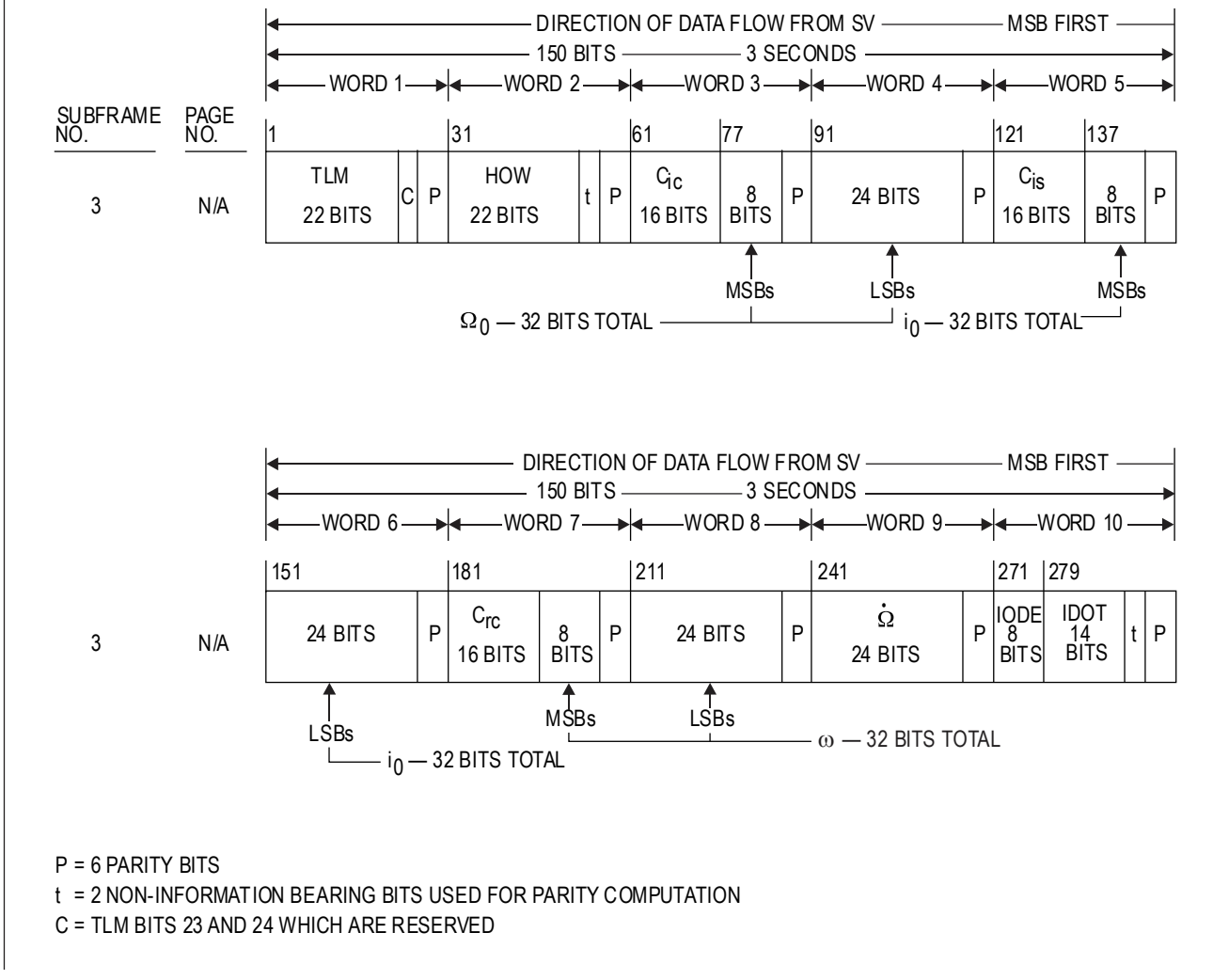

P = 6 PARITY BITS
t = 2 NON-INFORMATION BEARING BITS USED FOR PARITY COMPUTATION
C = TLM BITS 23 AND 24 WHICH ARE RESERVED

Figure B-6. Data format (3 of 11)

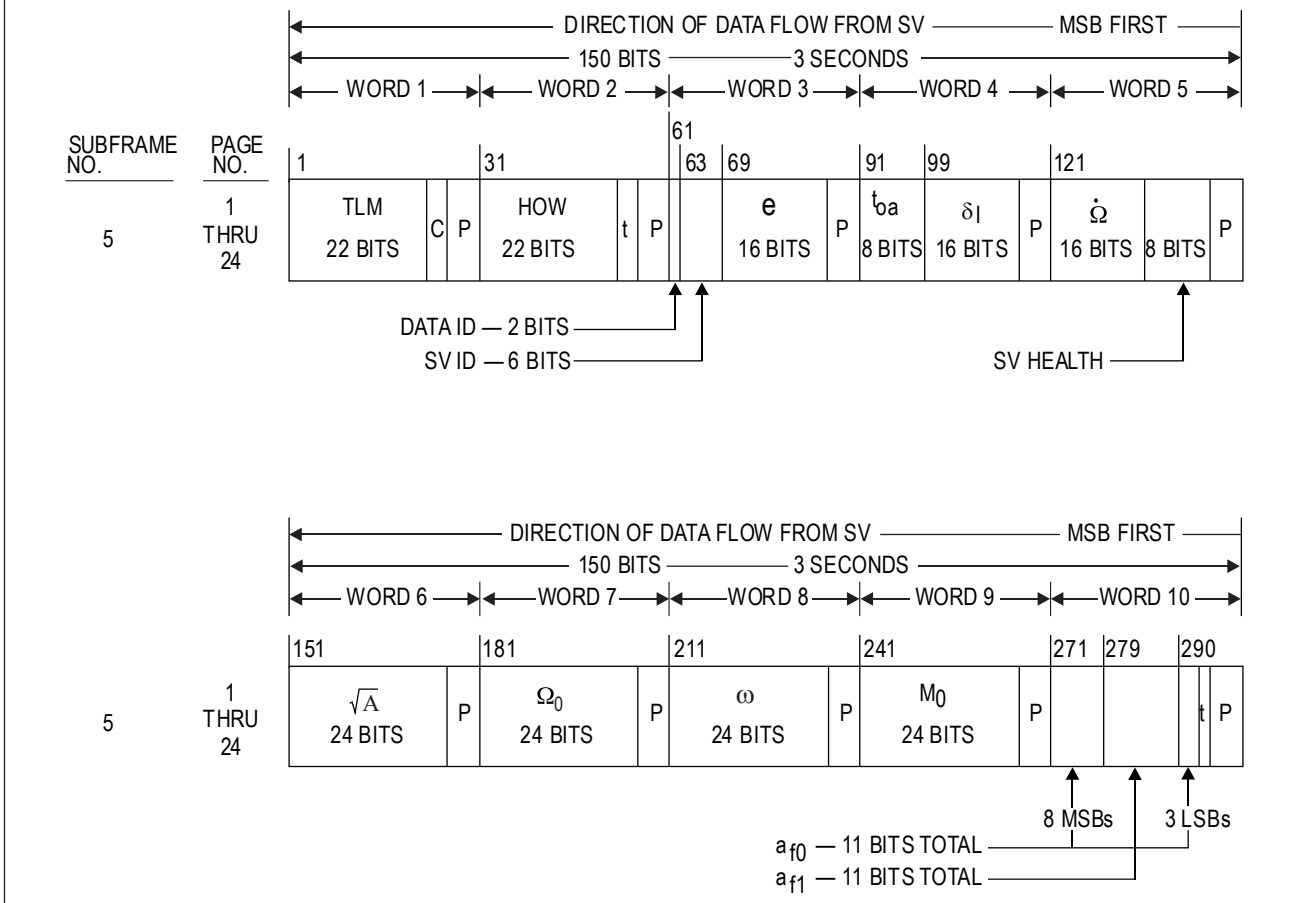

P = 6 PARITY BITS

t = 2 NON-INFORMATION BEARING BITS USED FOR PARITY COMPUTATION

C = TLM BITS 23 AND 24 WHICH ARE RESERVED

Note.— Pages 2, 3, 4, 5, 7, 8, 9 and 10 of subframe 4 have the same format as pages 1 through 24 of subframe 5.

Figure B-6. Data format (4 of 11)

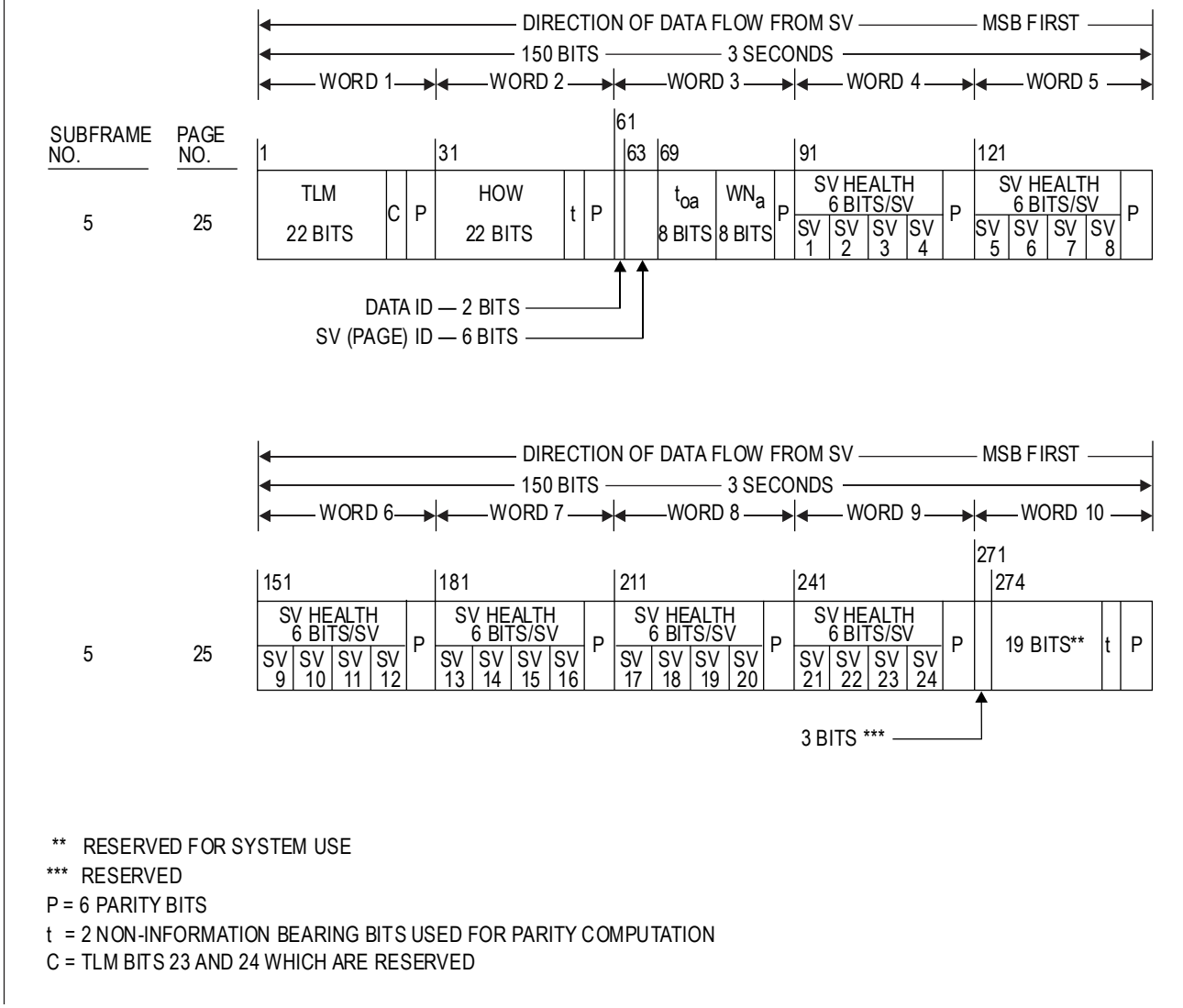

** RESERVED FOR SYSTEM USE
*** RESERVED
P = 6 PARITY BITS
t = 2 NON-INFORMATION BEARING BITS USED FOR PARITY COMPUTATION
C = TLM BITS 23 AND 24 WHICH ARE RESERVED

Figure B-6. Data format (5 of 11)

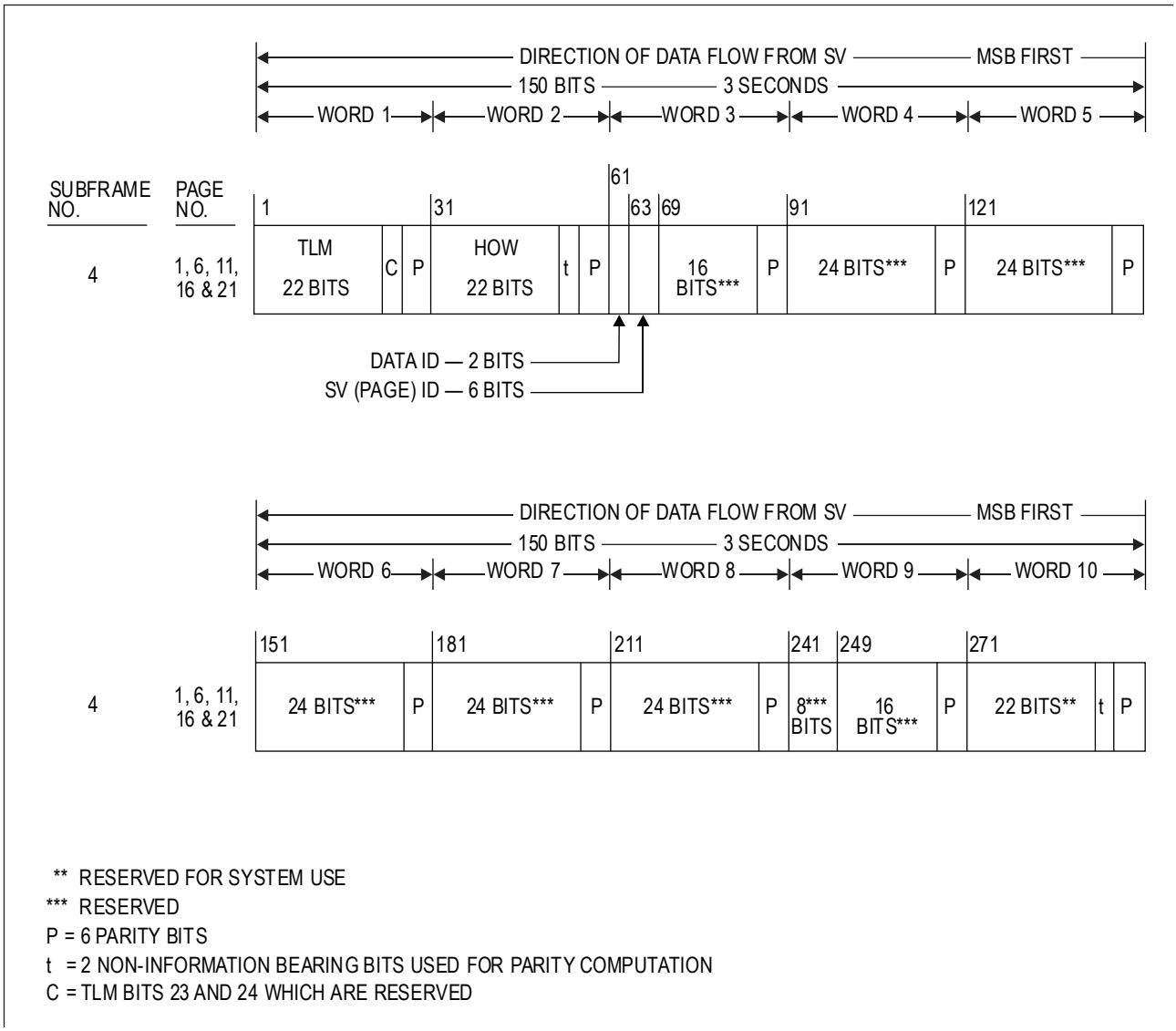

** RESERVED FOR SYSTEM USE
*** RESERVED
P = 6 PARITY BITS
t = 2 NON-INFORMATION BEARING BITS USED FOR PARITY COMPUTATION
C = TLM BITS 23 AND 24 WHICH ARE RESERVED

Figure B-6. Data format (6 of 11)

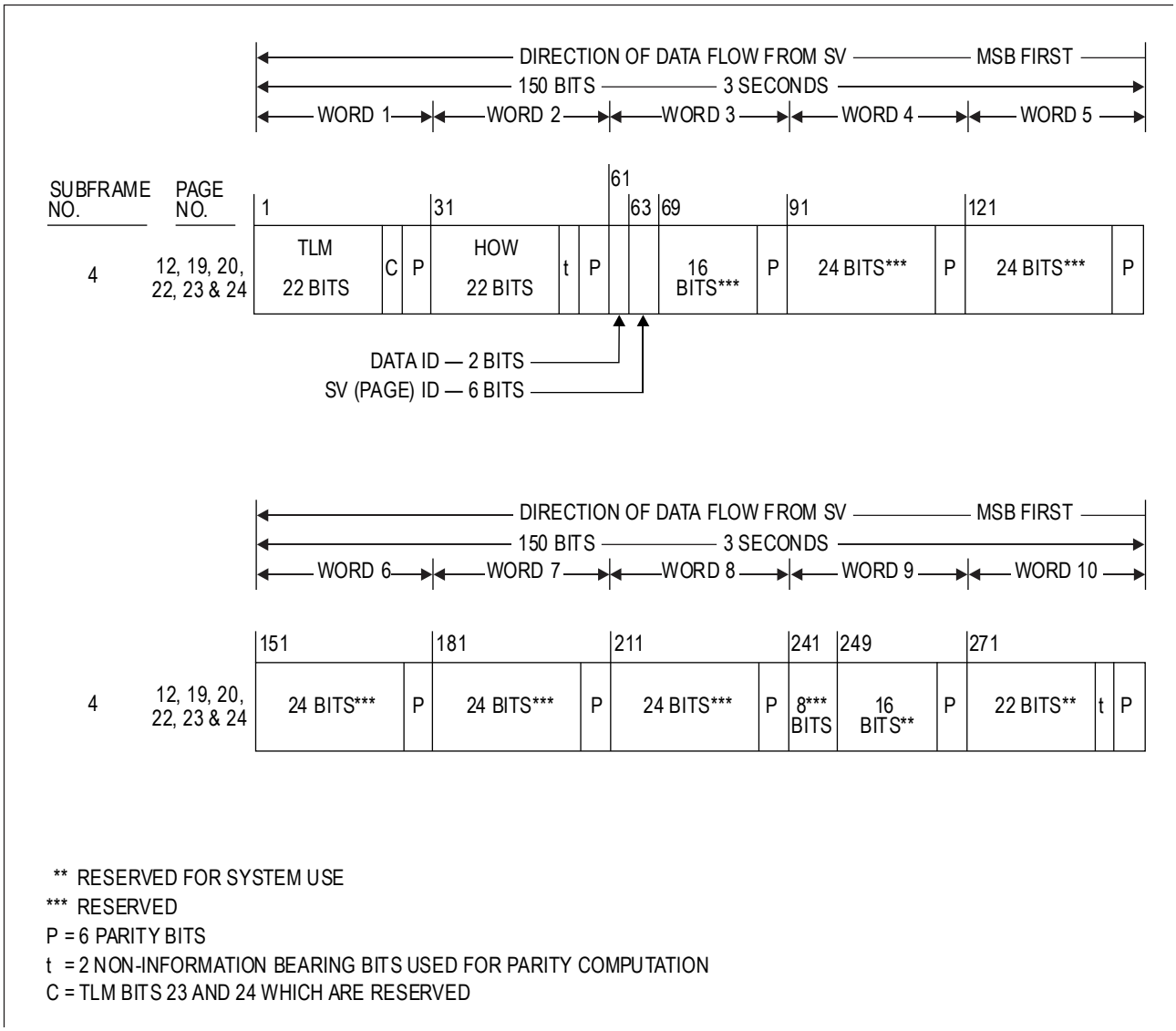

** RESERVED FOR SYSTEM USE
*** RESERVED
P = 6 PARITY BITS
t = 2 NON-INFORMATION BEARING BITS USED FOR PARITY COMPUTATION
C = TLM BITS 23 AND 24 WHICH ARE RESERVED

Figure B-6. Data format (7 of 11)

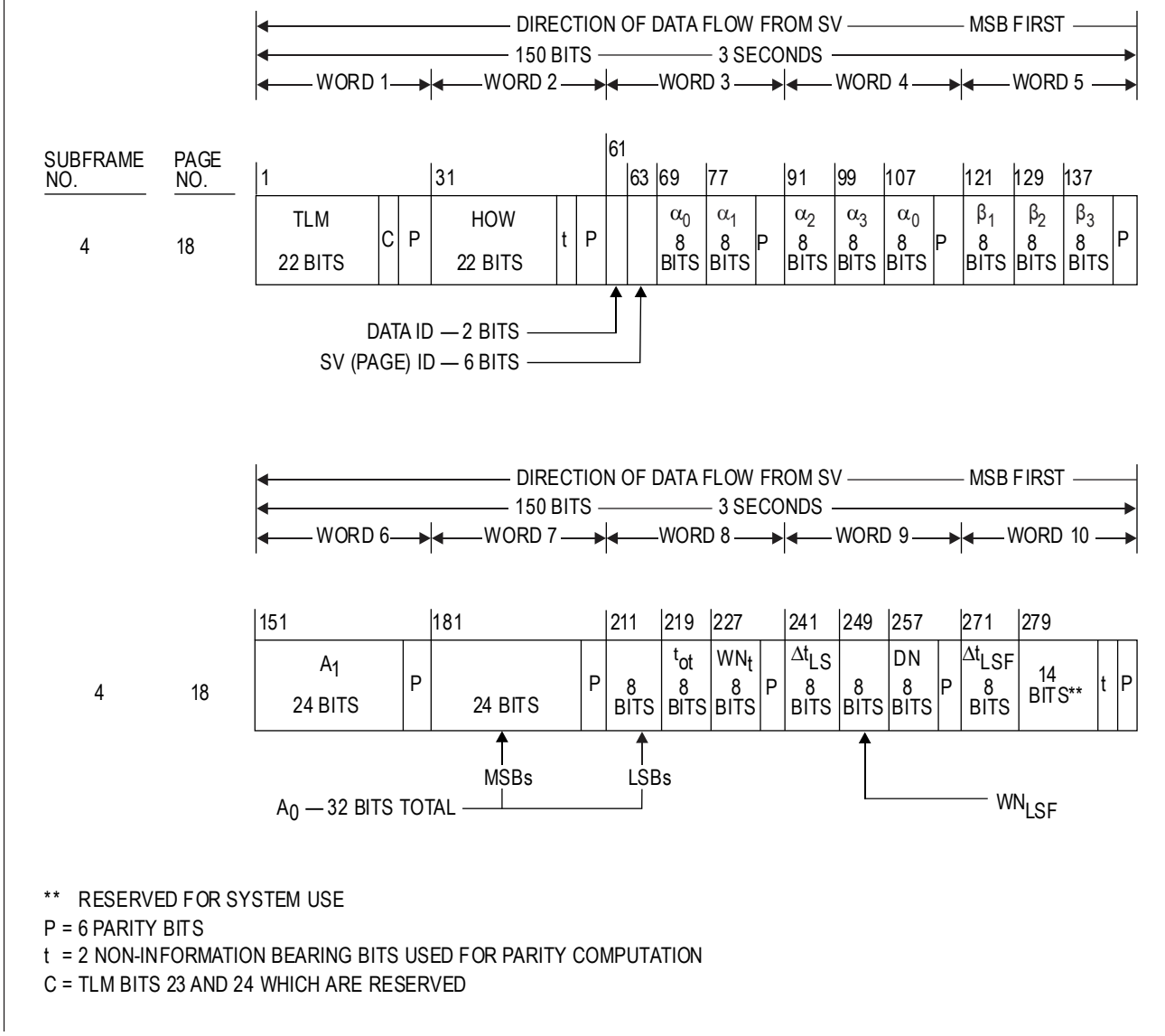

** RESERVED FOR SYSTEM USE
P = 6 PARITY BITS
t = 2 NON-INFORMATION BEARING BITS USED FOR PARITY COMPUTATION
C = TLM BITS 23 AND 24 WHICH ARE RESERVED

Figure B-6. Data format (8 of 11)

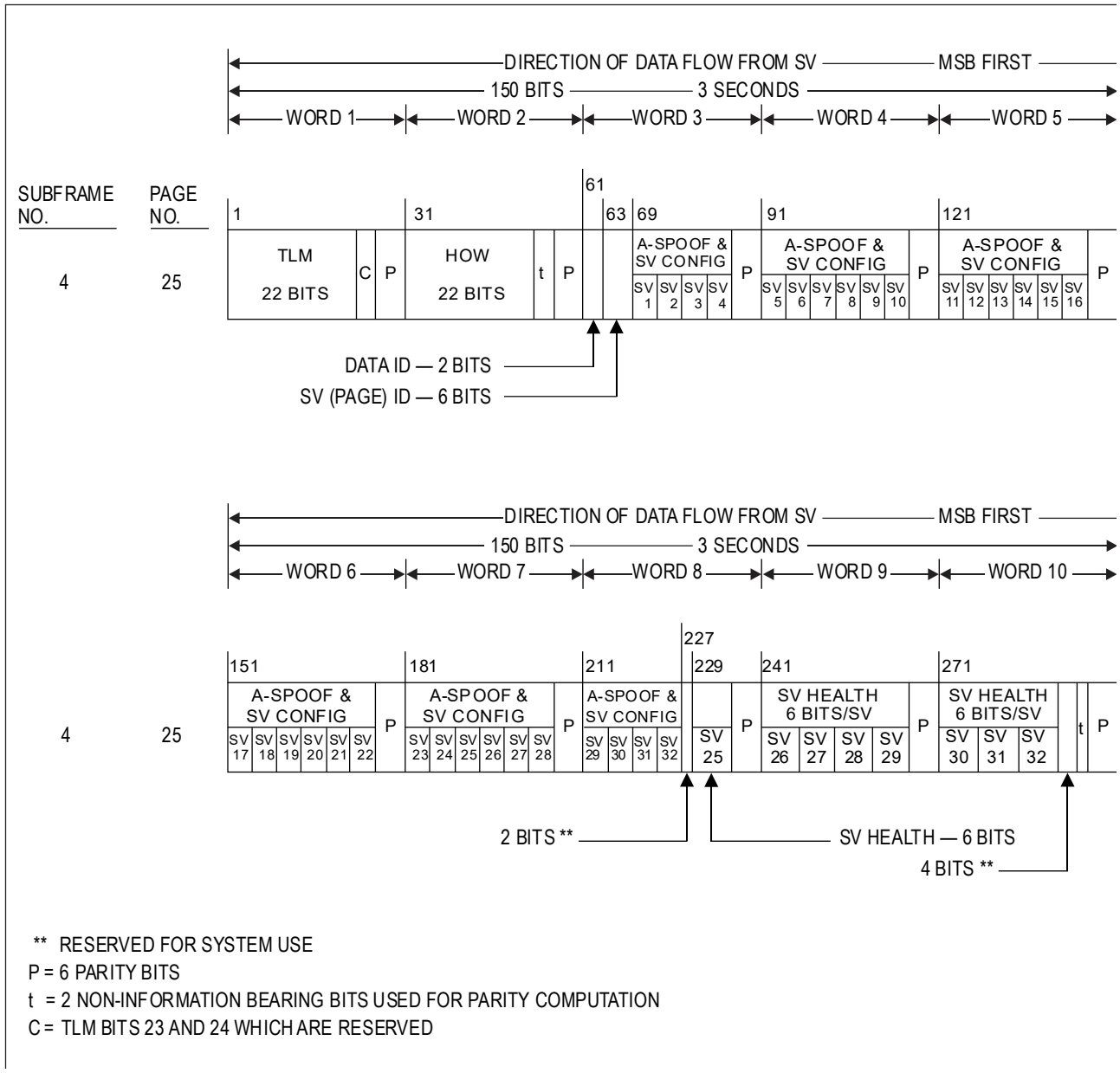

Figure B-6. Data format (9 of 11)

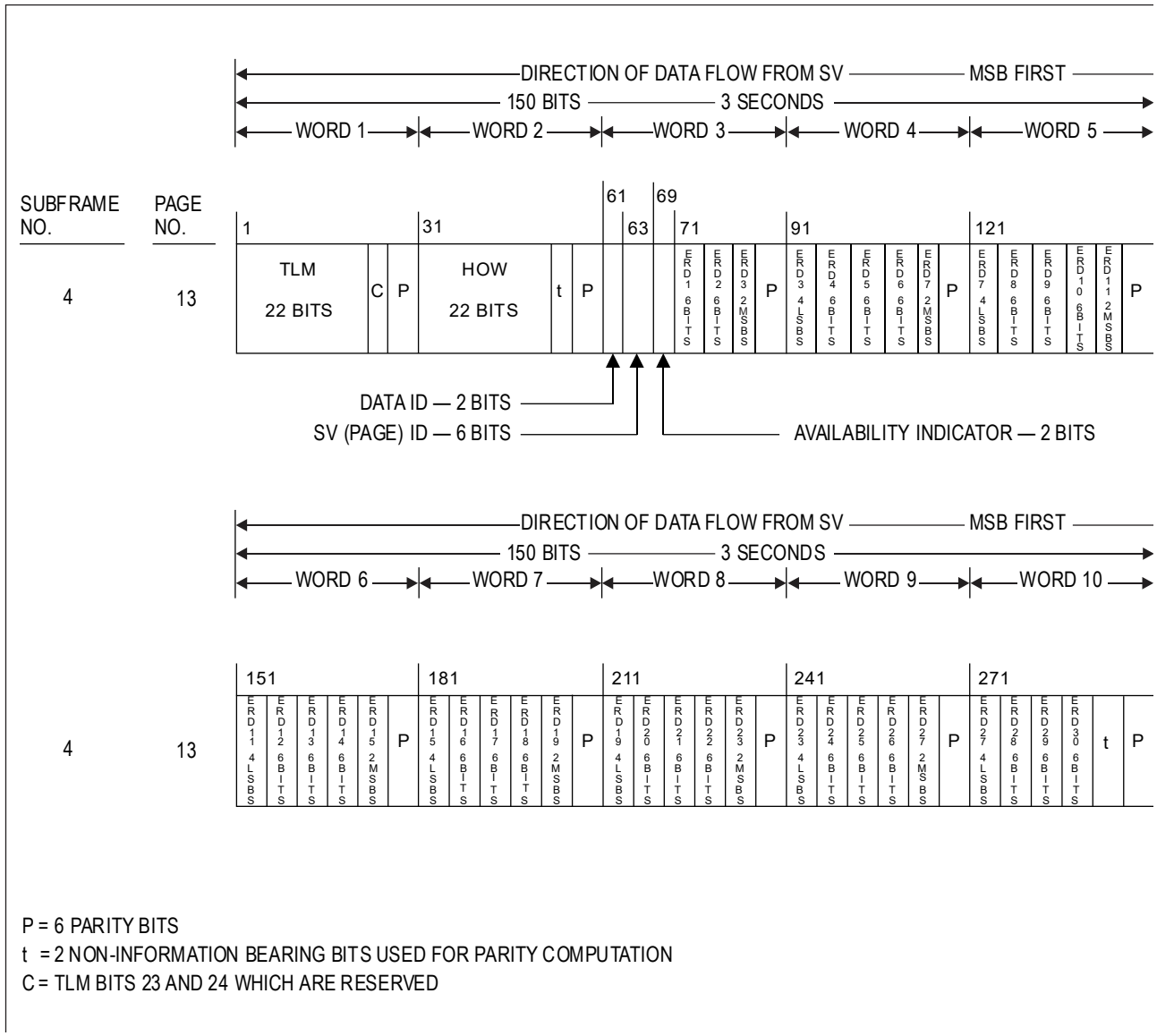

Figure B-6. Data format (10 of 11)

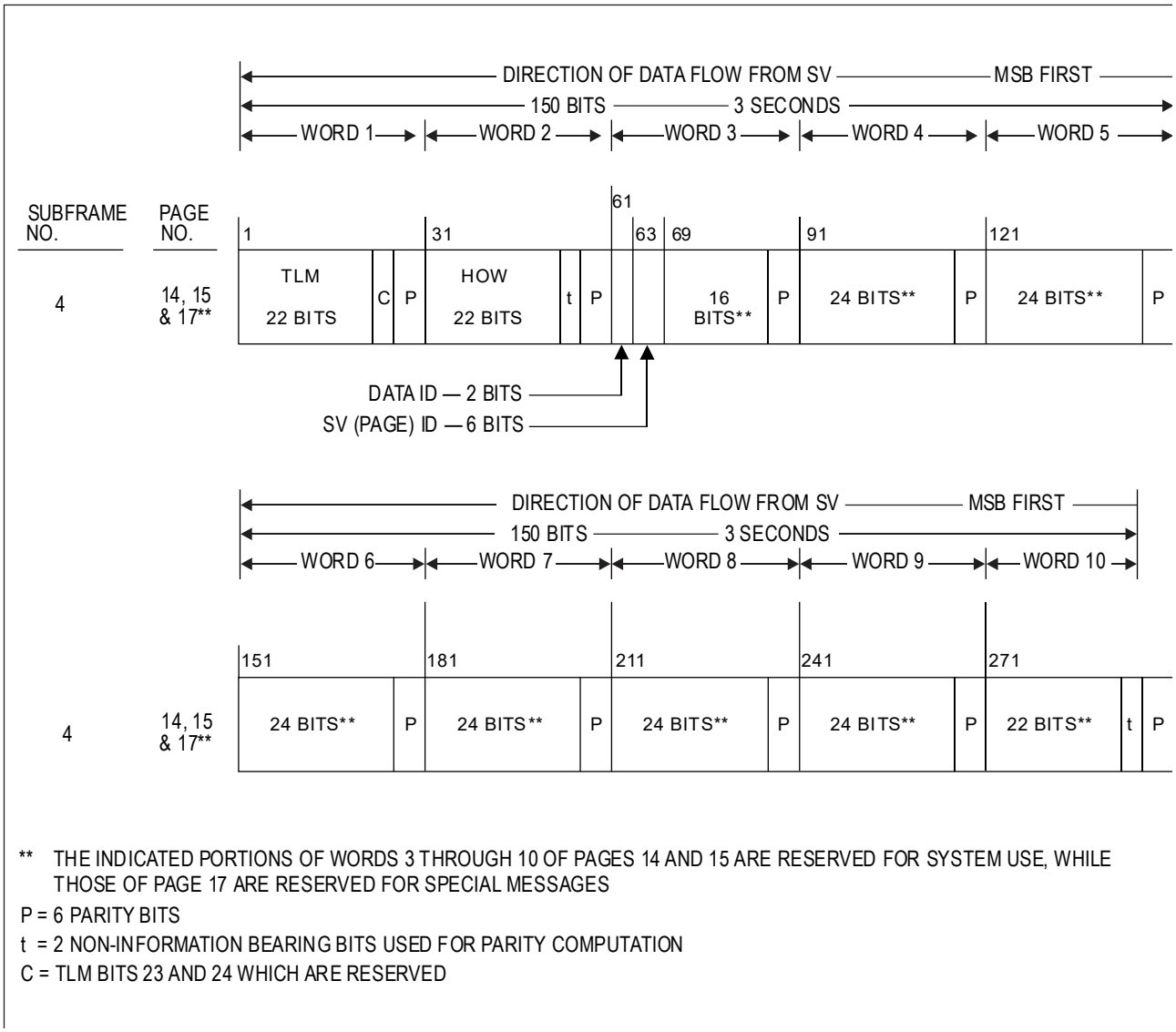

** THE INDICATED PORTIONS OF WORDS 3 THROUGH 10 OF PAGES 14 AND 15 ARE RESERVED FOR SYSTEM USE, WHILE THOSE OF PAGE 17 ARE RESERVED FOR SPECIAL MESSAGES

P = 6 PARITY BITS

t = 2 NON-INFORMATION BEARING BITS USED FOR PARITY COMPUTATION

C = TLM BITS 23 AND 24 WHICH ARE RESERVED

Figure B-6. Data format (11 of 11)

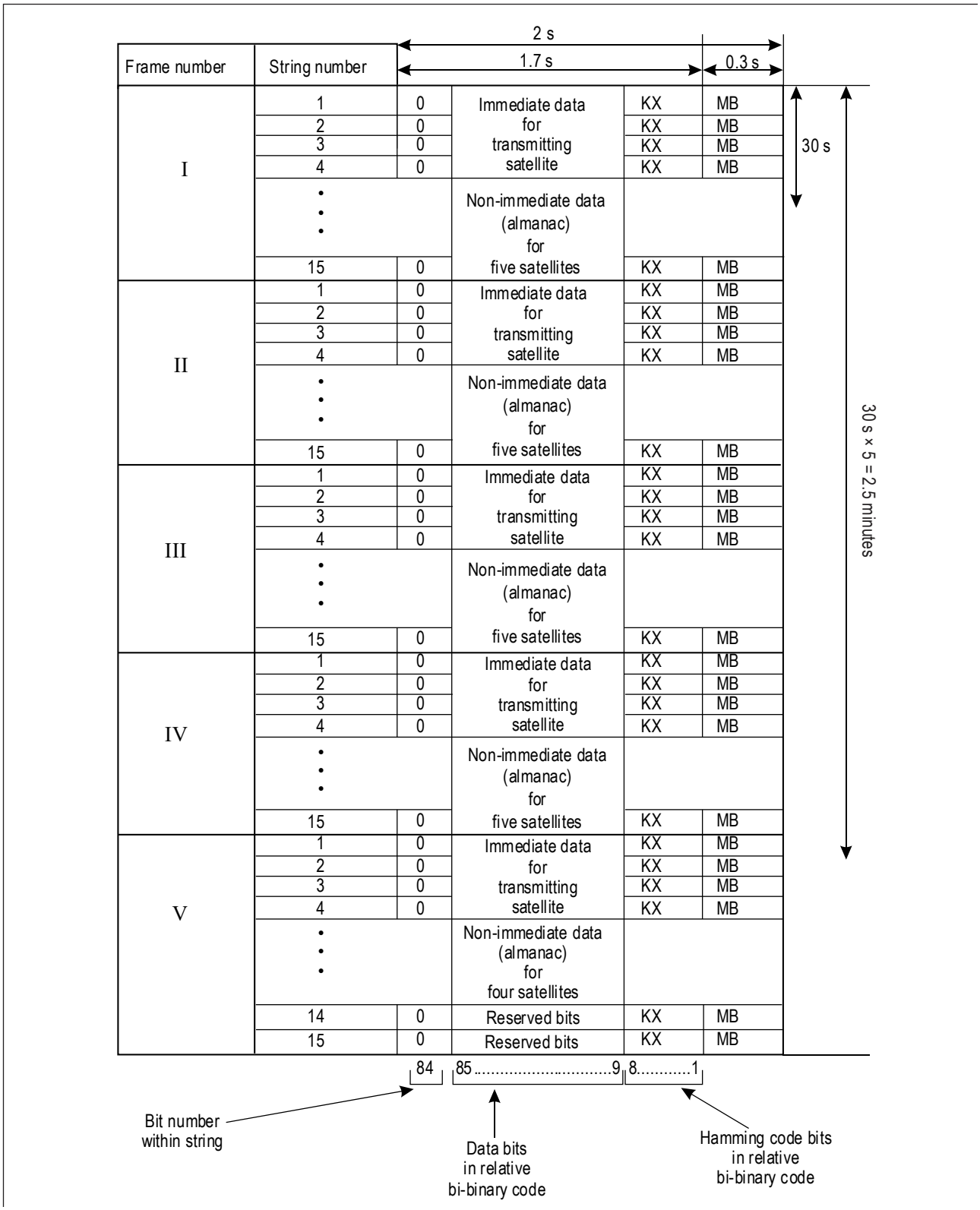

Figure B-7. Superframe structure

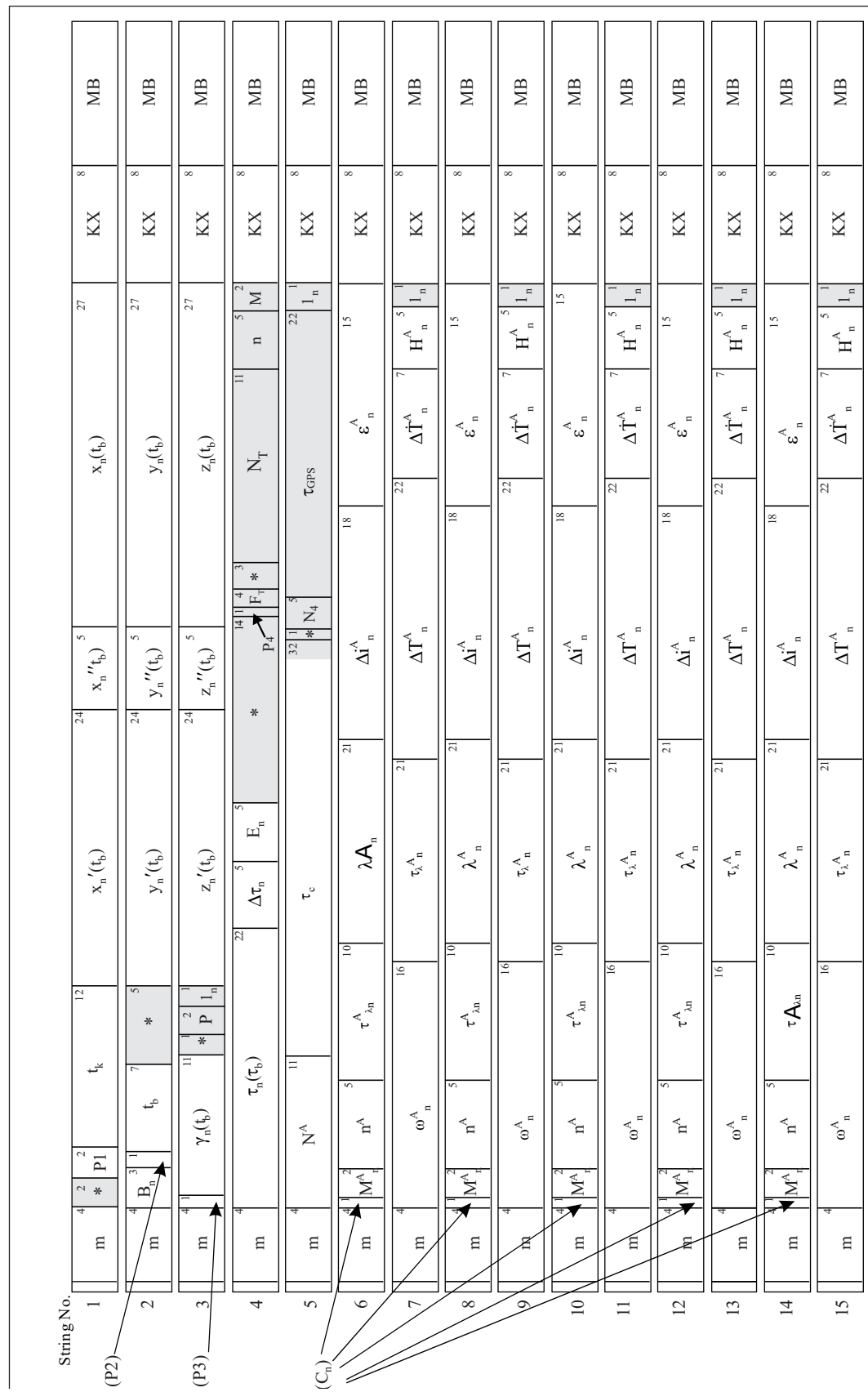

* Reserved bits within frame

Note.— Data content, definitions and explanations of parameters are given in 3.2.1.3 and 3.2.1.4. Additional data transmitted by GLONASS-M are highlighted in this figure.

Figure B-8. Frame structure (frames 1 to 4)

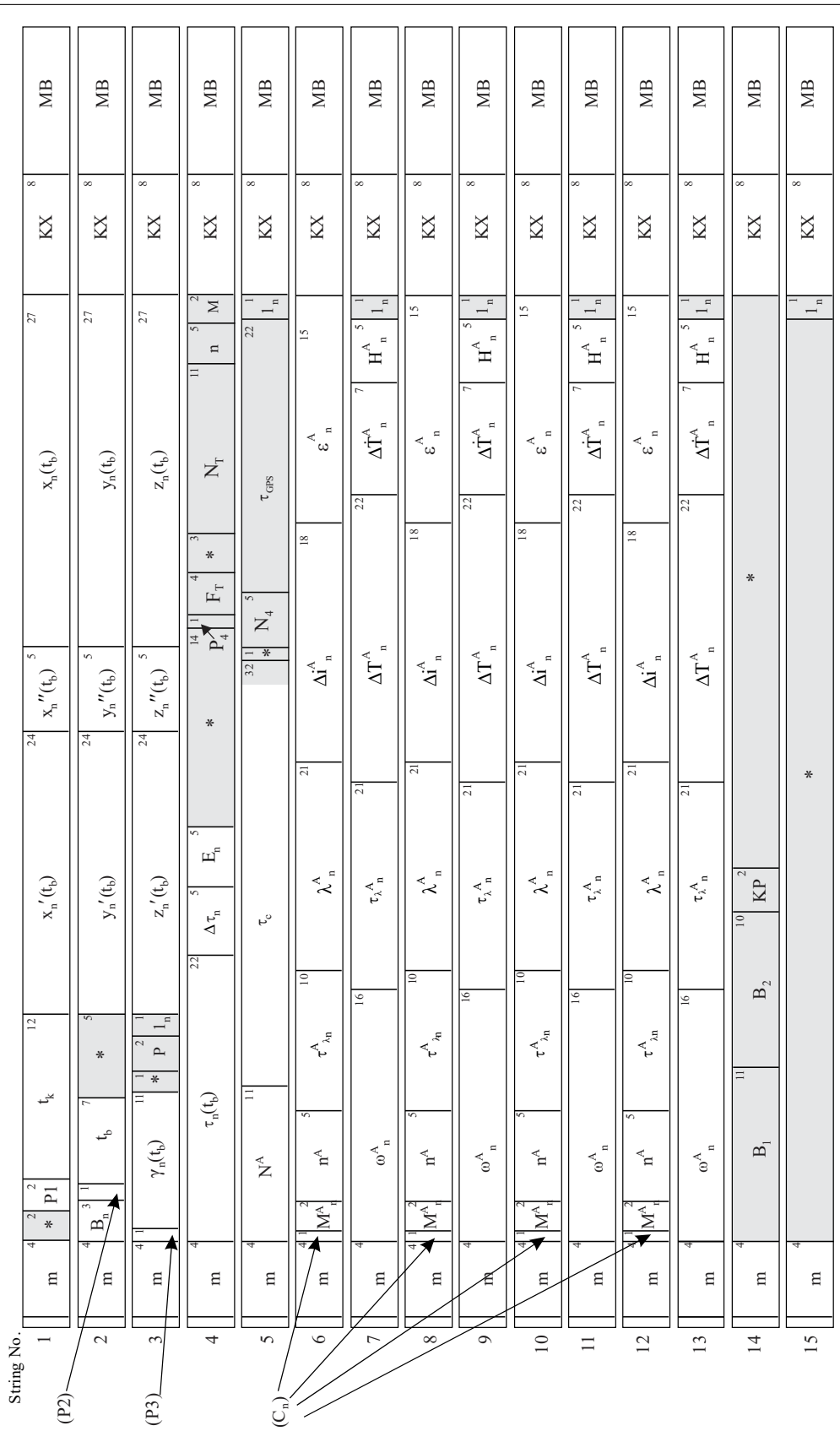

* Reserved bits within frame

Note.— Data content, definitions and explanations of parameters are given in 3.2.1.3 and 3.2.1.4. Additional data transmitted by GLONASS-M are highlighted in this figure.

Figure B-9. Frame structure (frame 5)

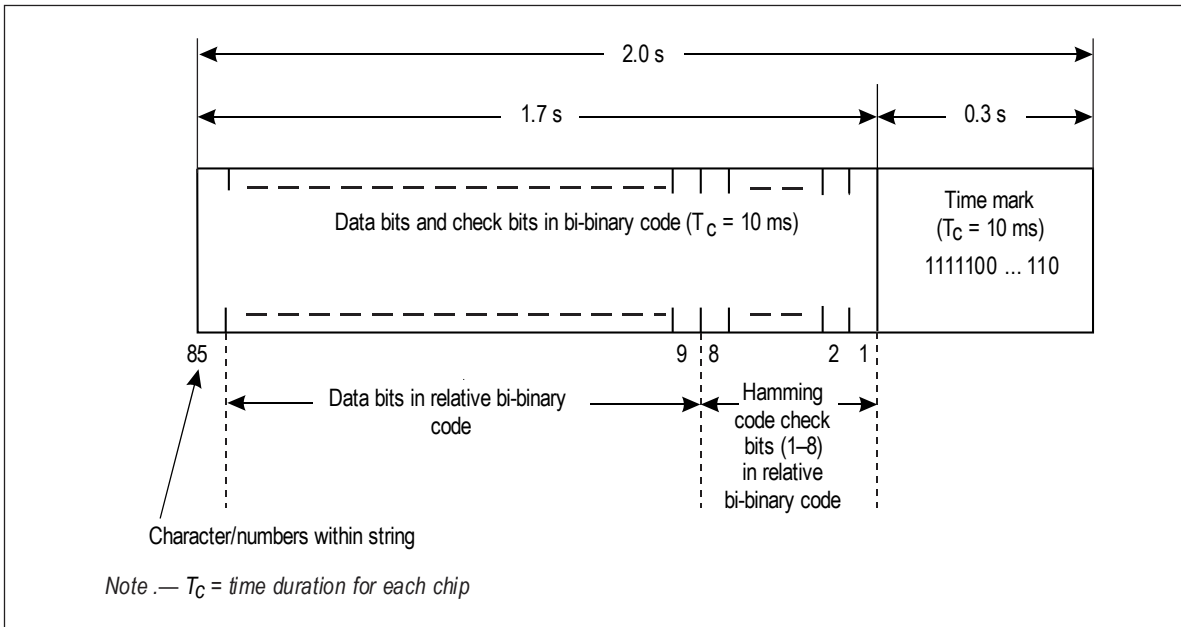

Figure B-10. Data string structure

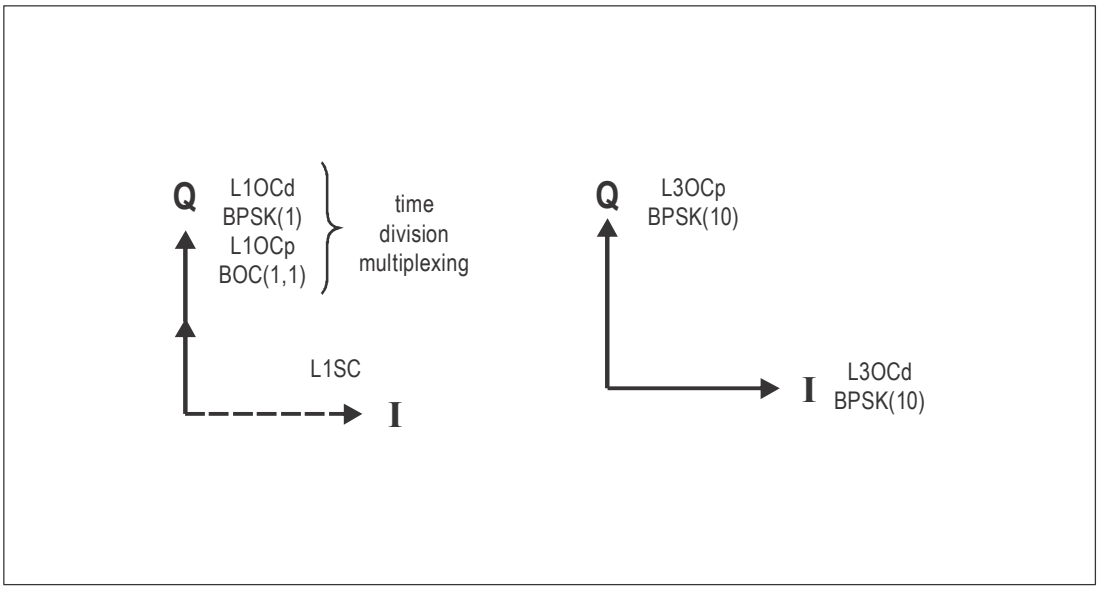

Figure B-11A. L1OC and L3OC signal structure

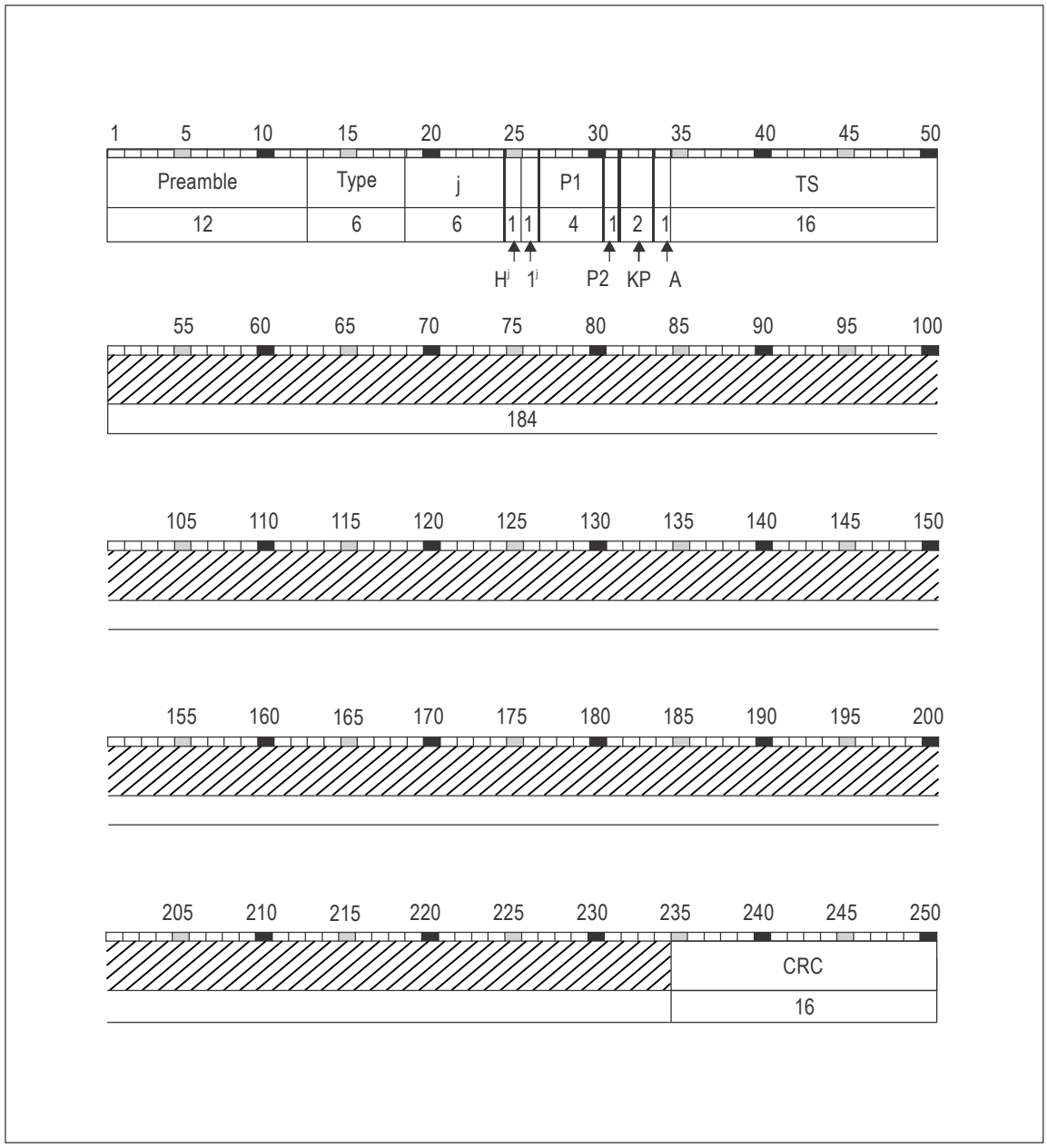

Figure B-11B. General structure of L1OCd data string

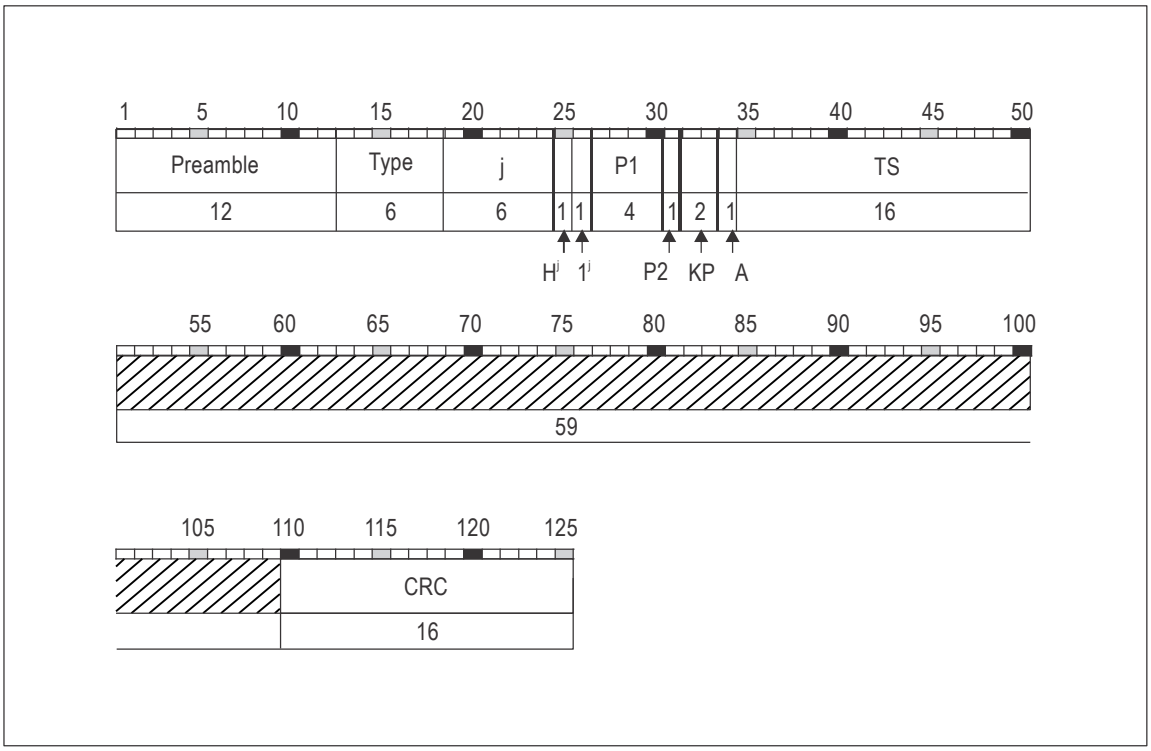

Figure B-11C. Anomalous L1OCd data string Type 1

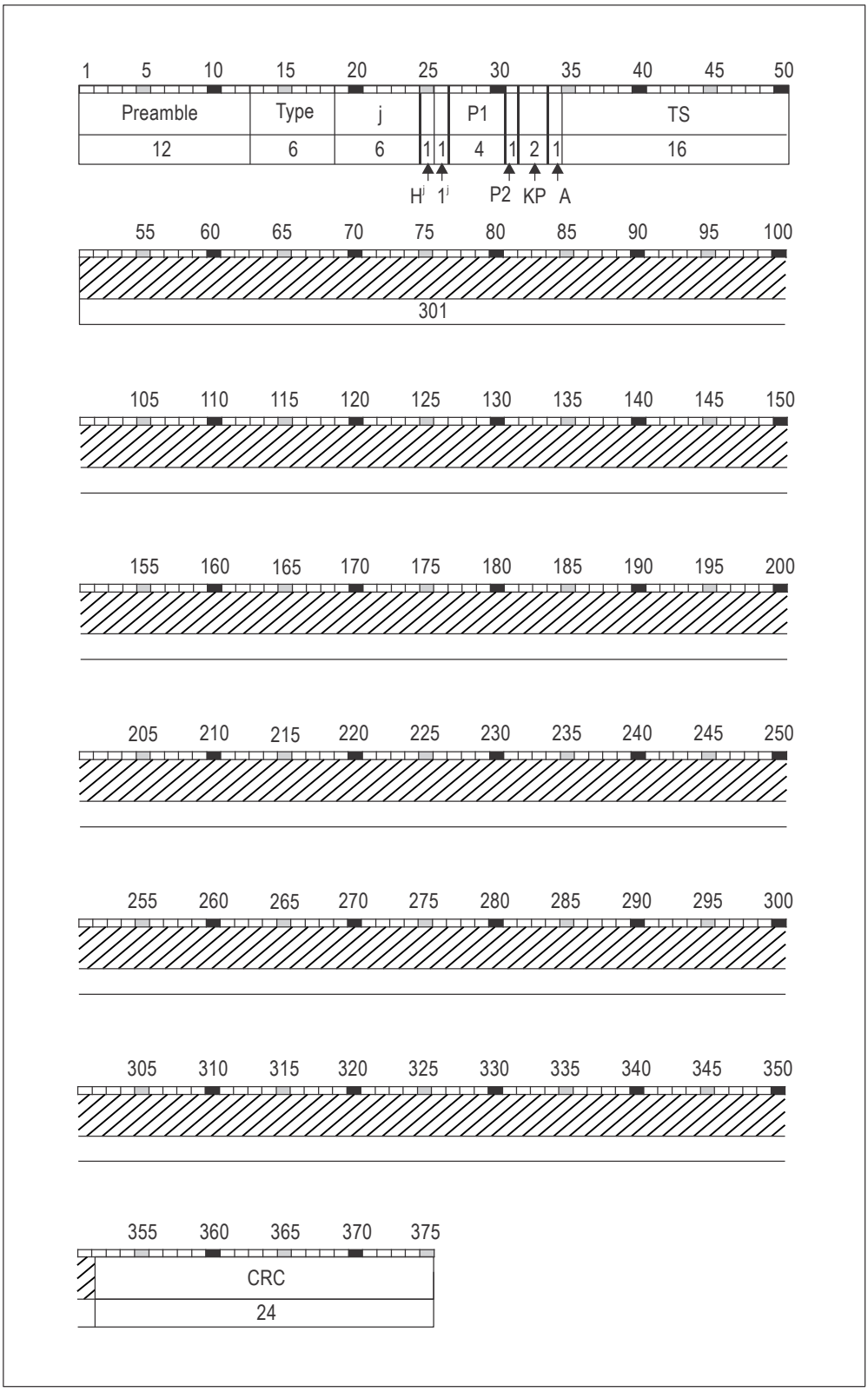

Figure B-11D. Anomalous L1OCd data string Type 2

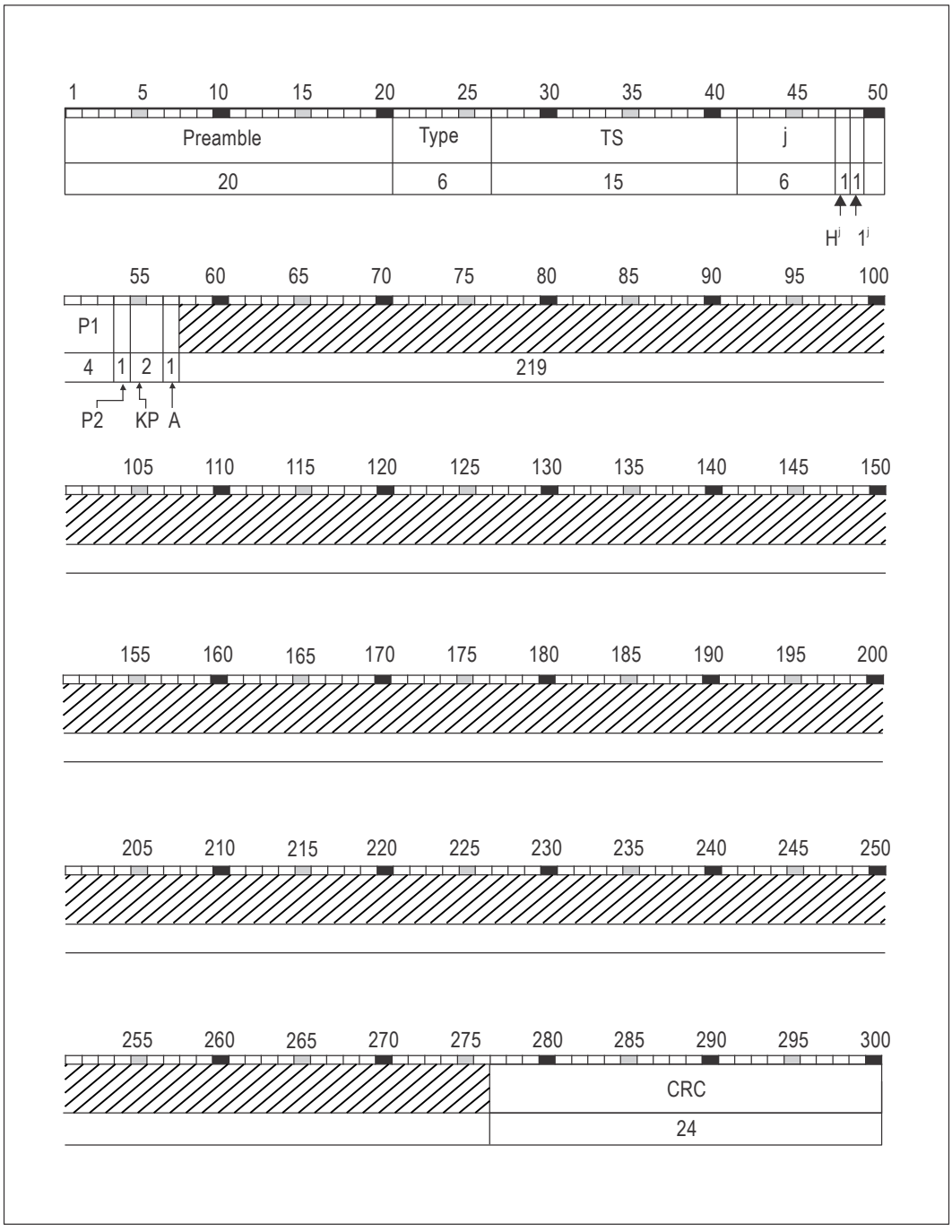

Figure B-12A. General structure of L3OCd data string

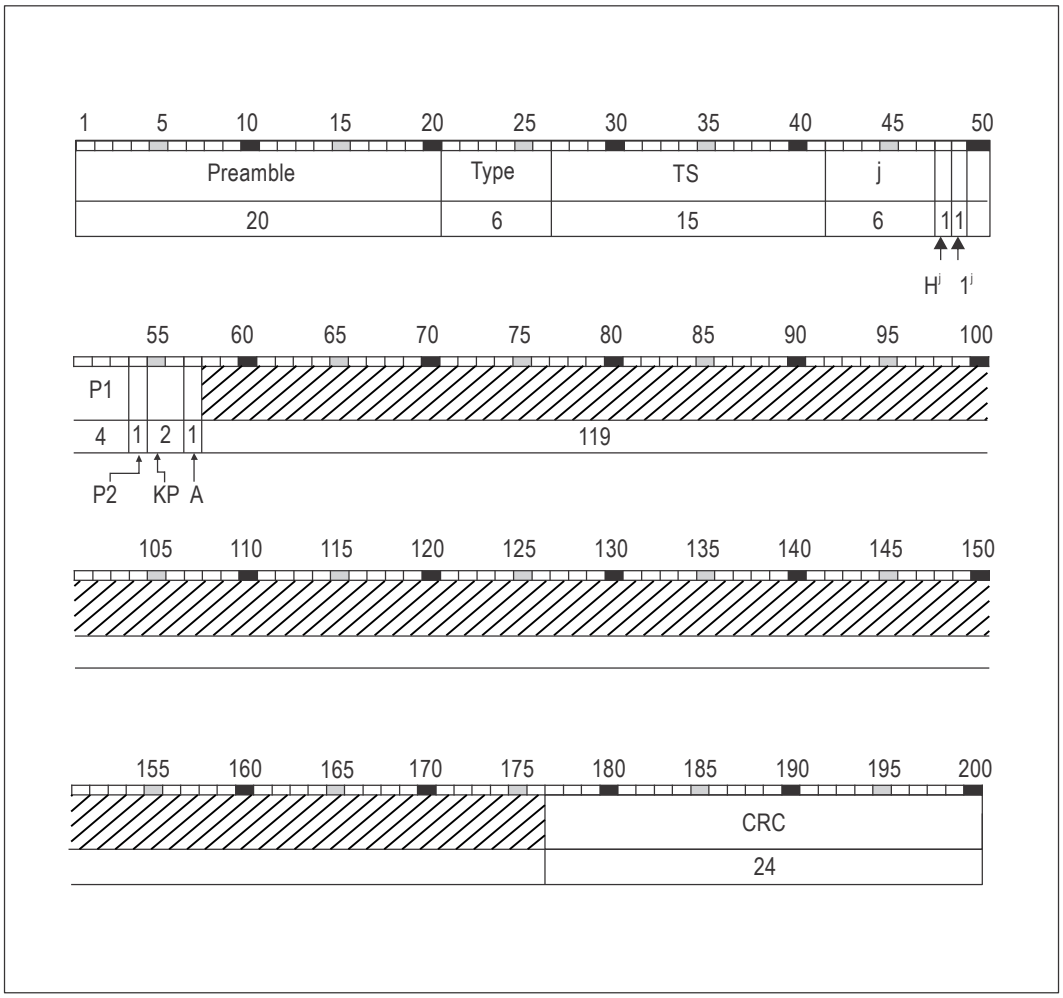

Figure B-12B. Anomalous L3OCd data string Type 1

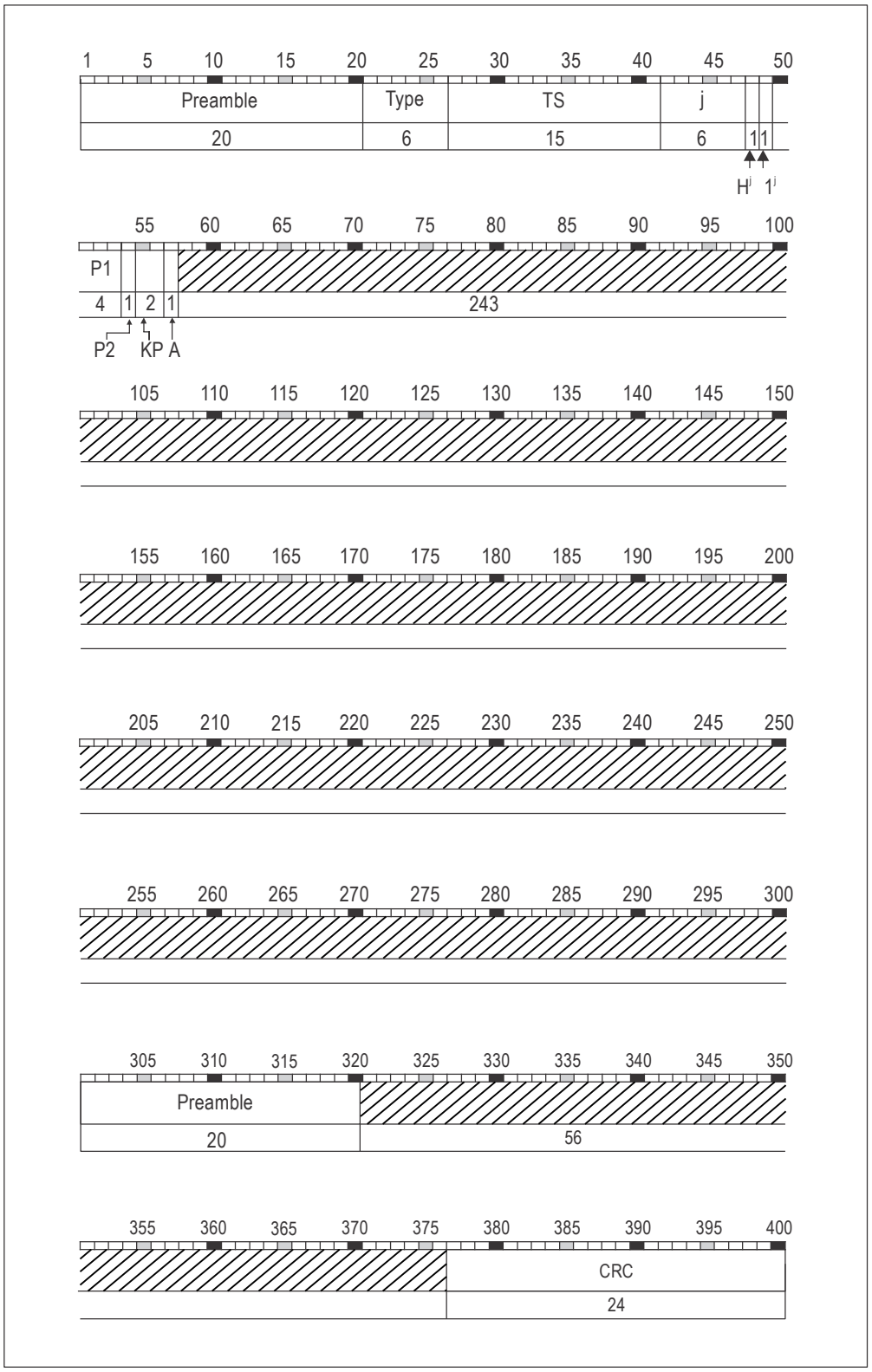

Figure B-12C. Anomalous L3OCd data string Type 2

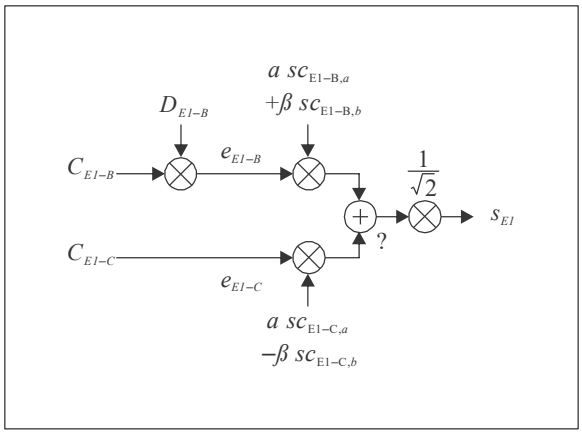

Figure B-13. Modulation scheme for the E1 CBOC signal

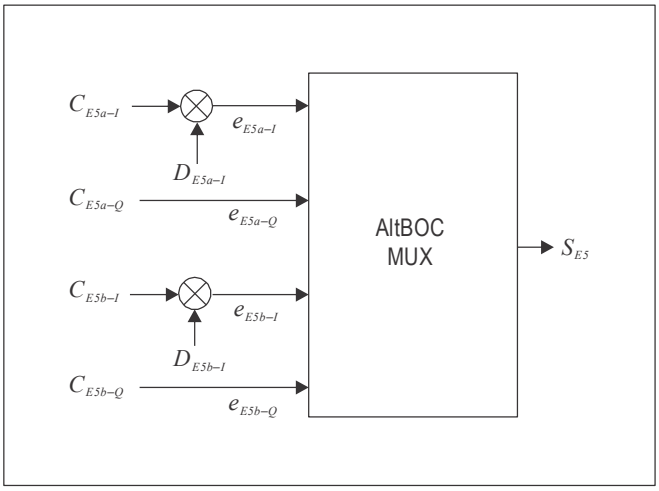

Figure B-14. Modulation scheme for the E5 AltBOC signal

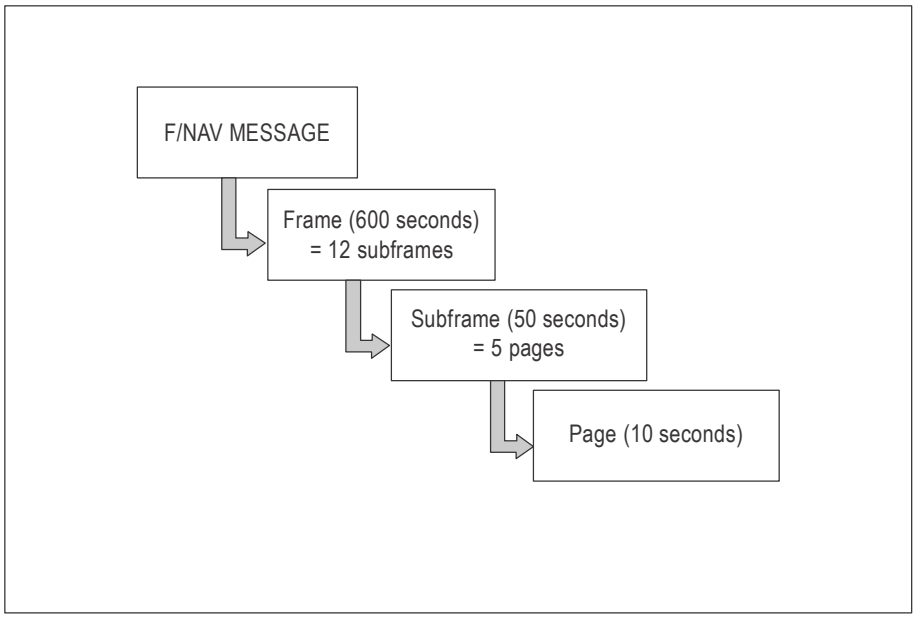

Figure B-15. F/NAV message structure

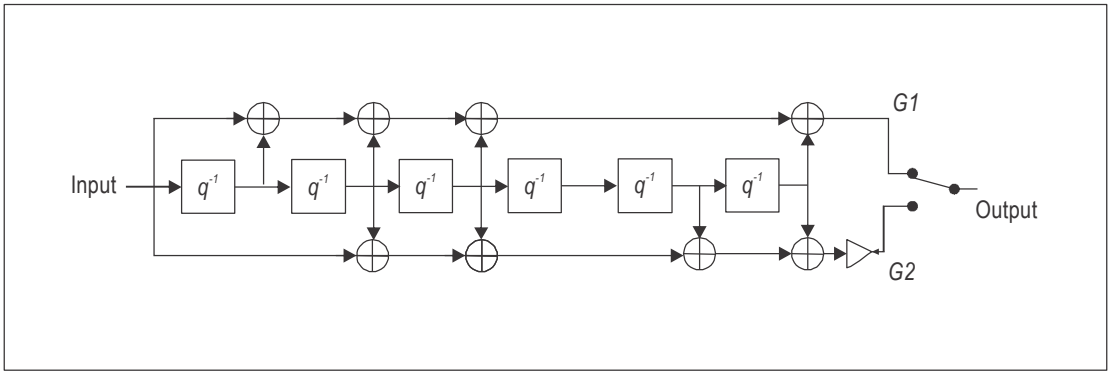

Figure B-16. F/NAV convolutional encoding scheme

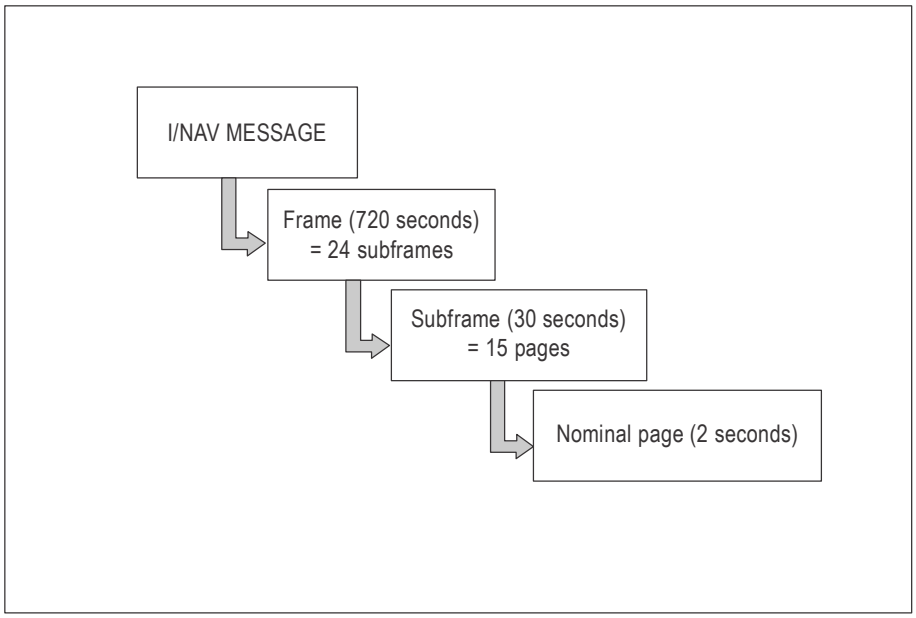

Figure B-17. I/NAV message structure

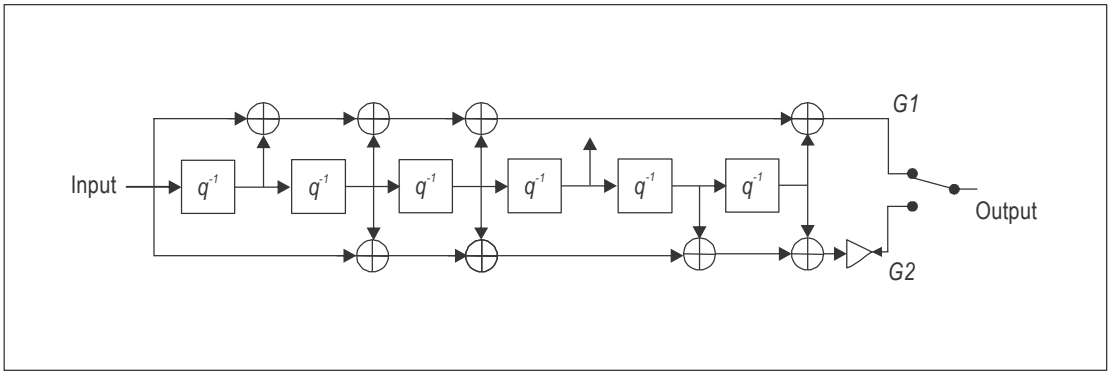

Figure B-18. Convolutional encoding scheme

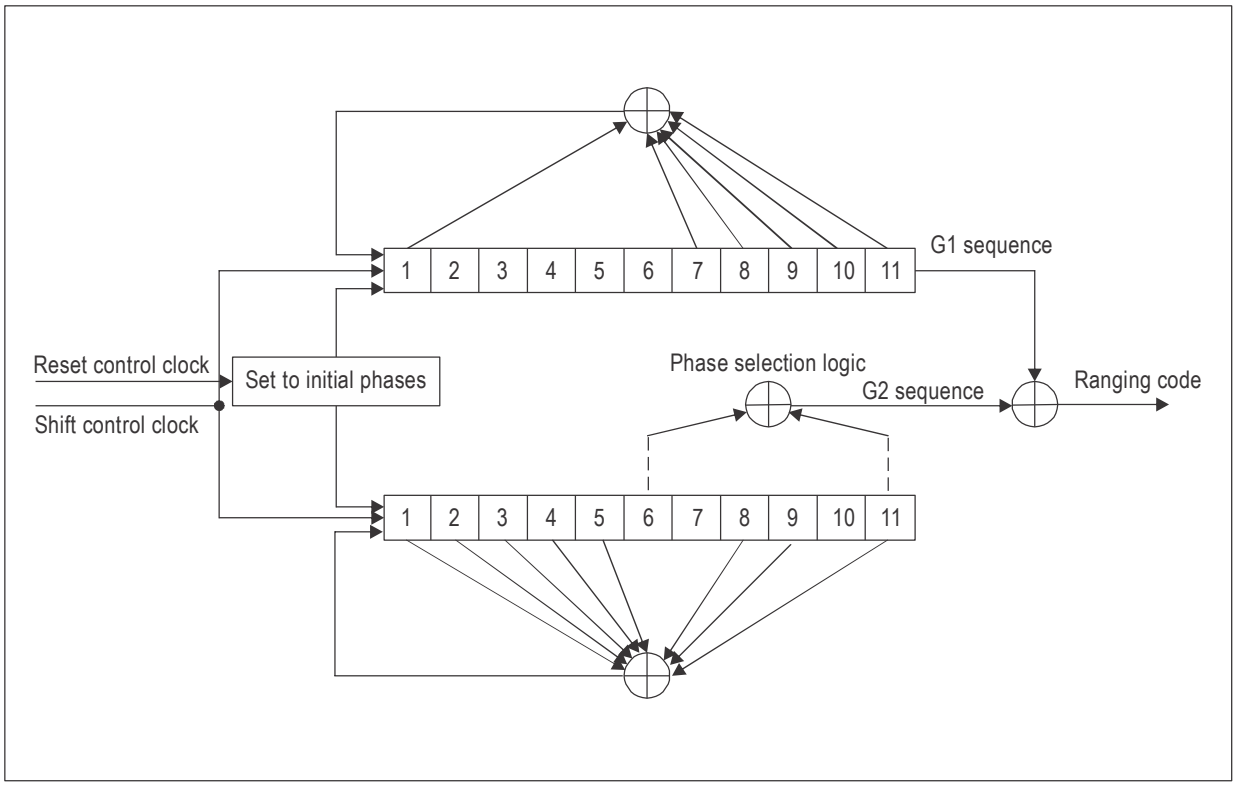

Figure B-19. Generator of CB1I

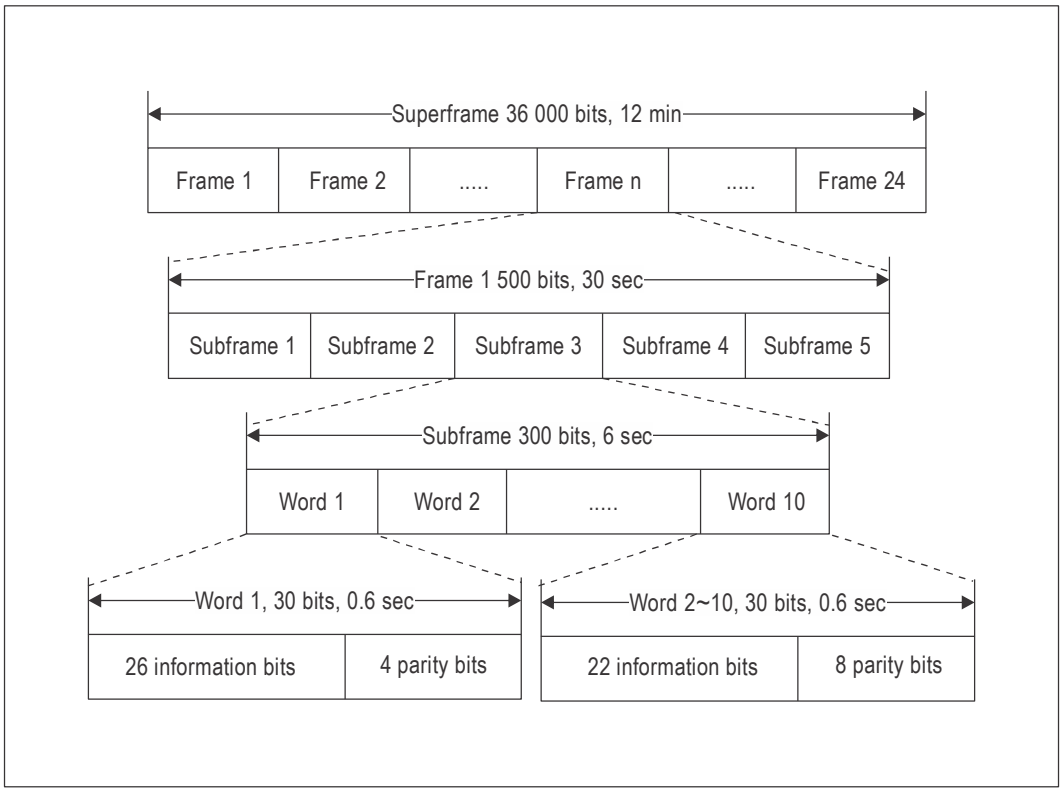

Figure B-20. Frame structure of the D1 navigation message

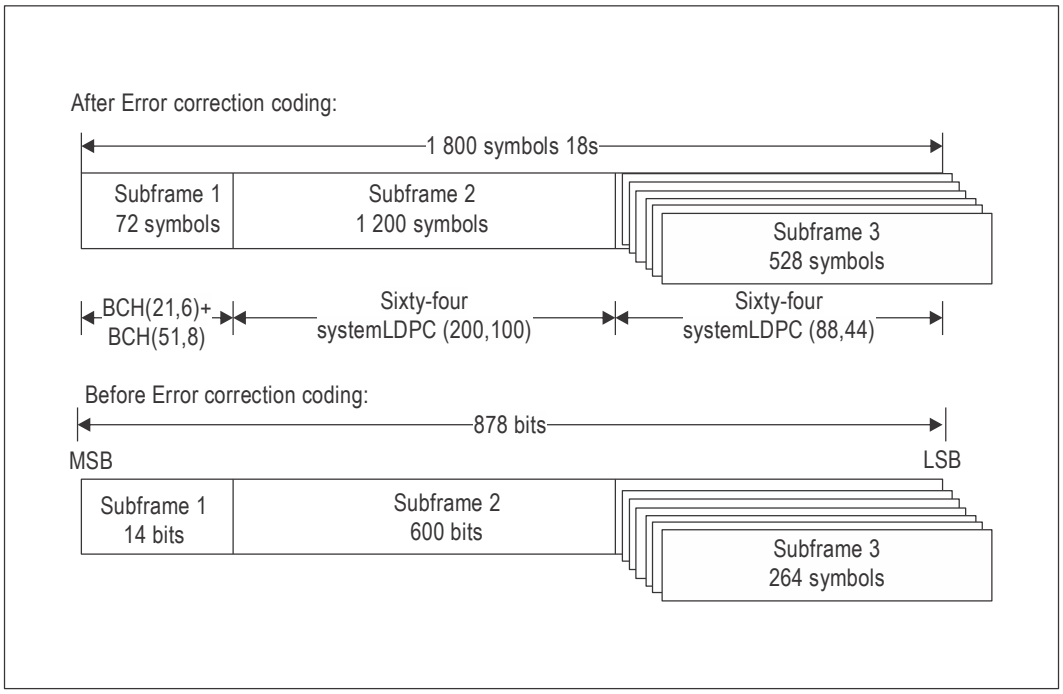

Figure B-21. Basic frame structure of B-CNAV1

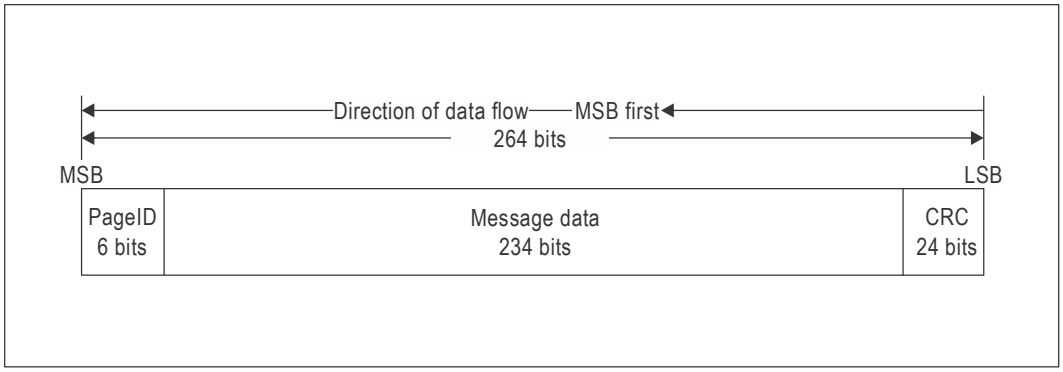

Figure B-22. Frame structure for B-CNAV1 subframe 3

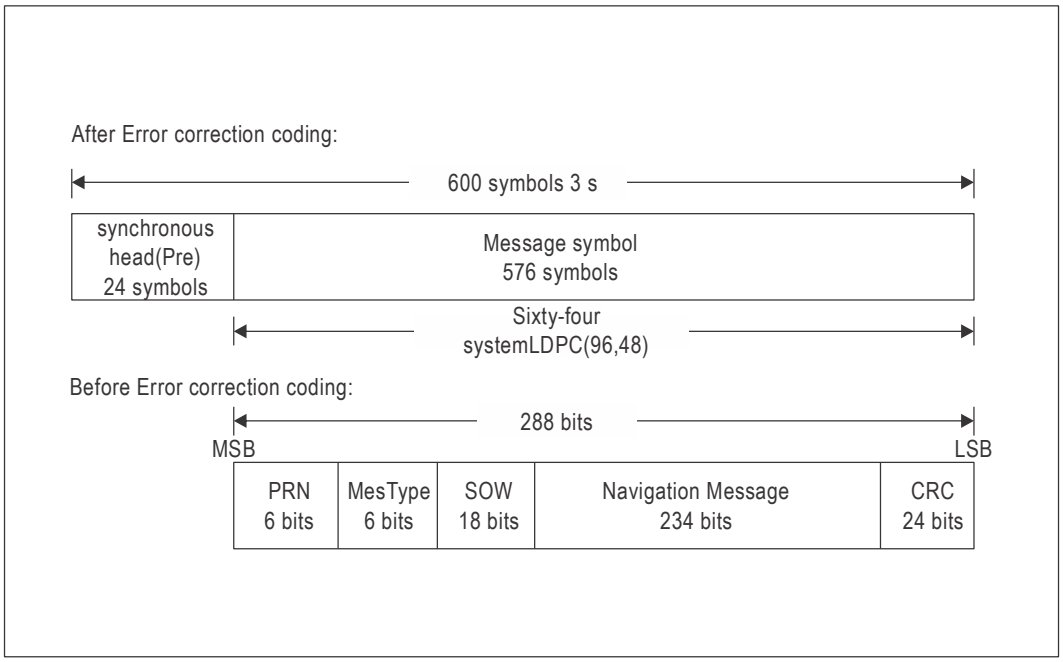

Figure B-23. B-CNAV2 basic frame structure

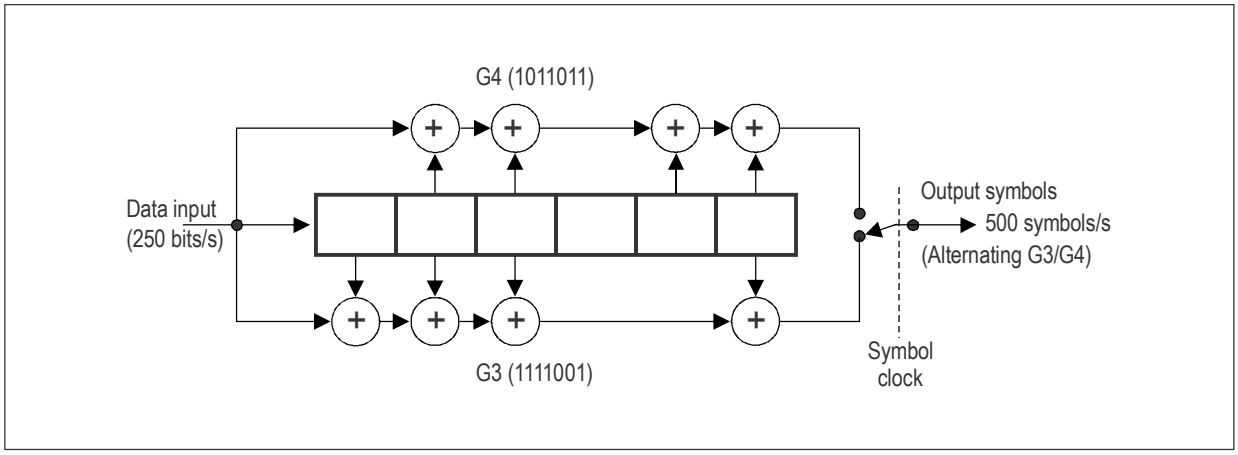

Figure B-24. Convolutional encoding

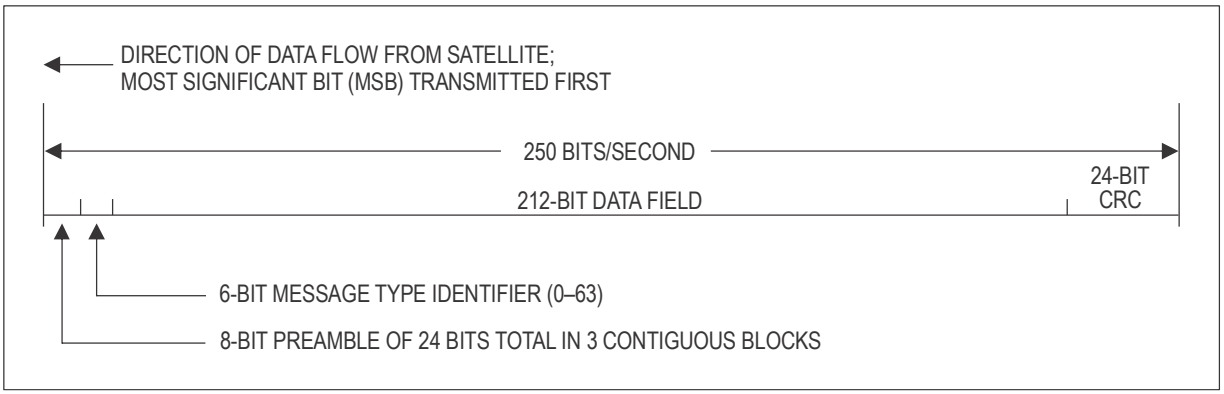

Figure B-25. L1 data block format

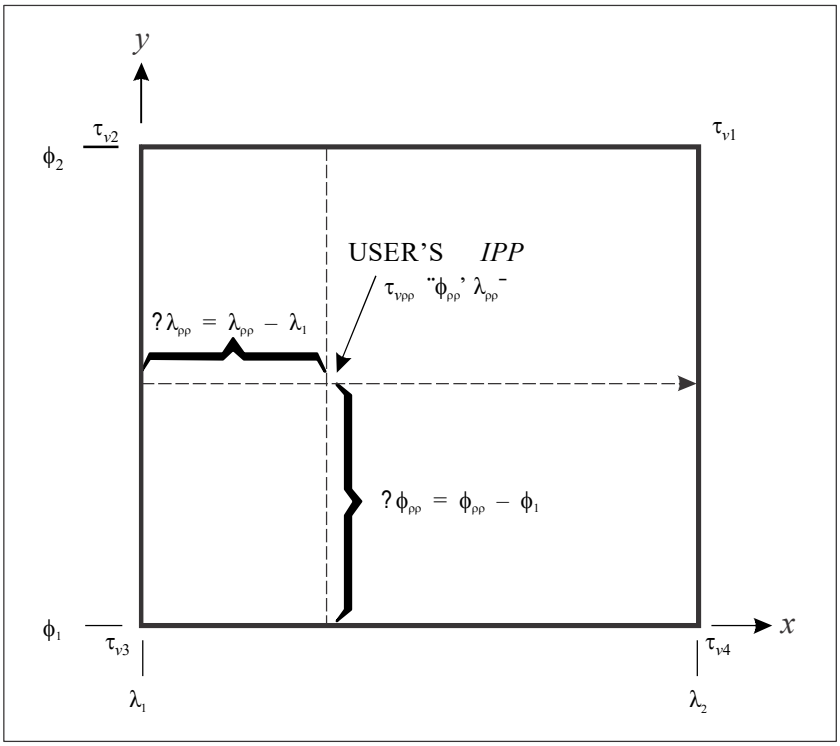

Figure B-26. IGP numbering convention (four IGPs)

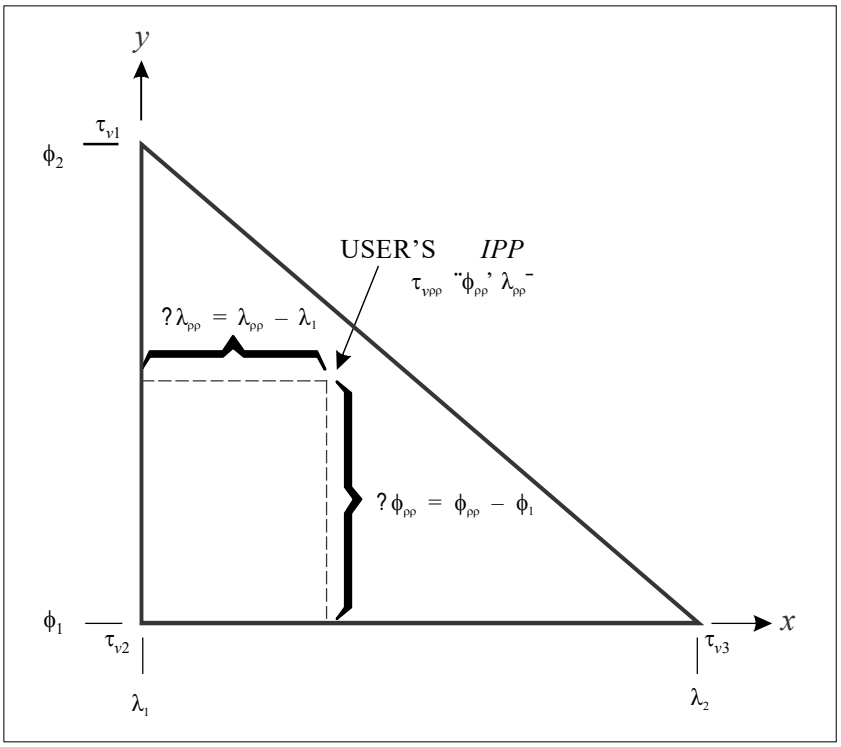

Figure B-27. IGP numbering convention (three IGPs)

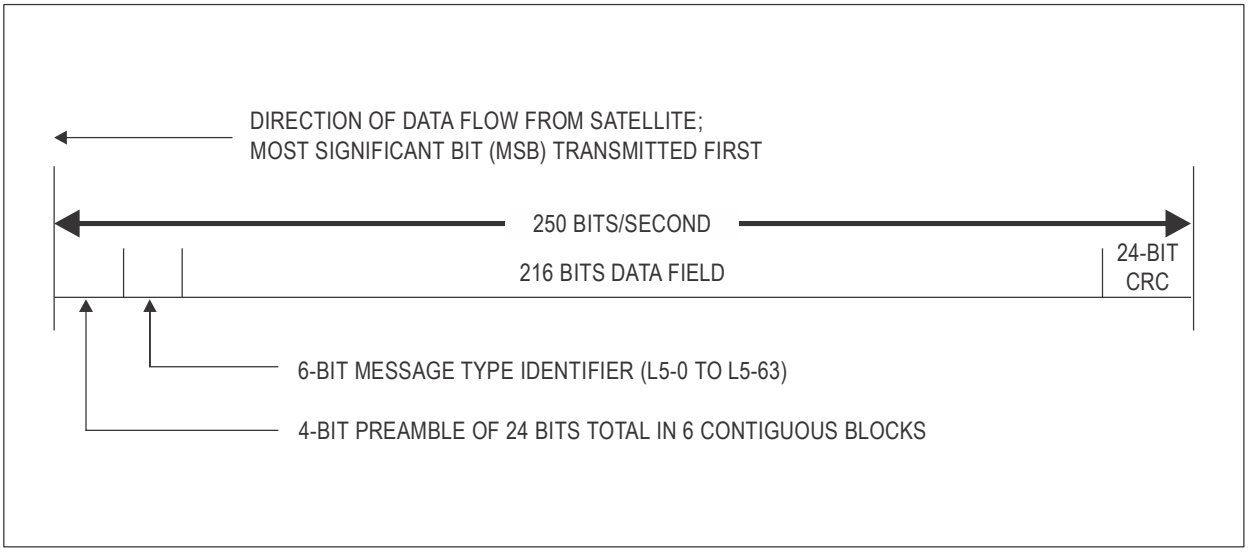

Figure B-28. L5 data block format

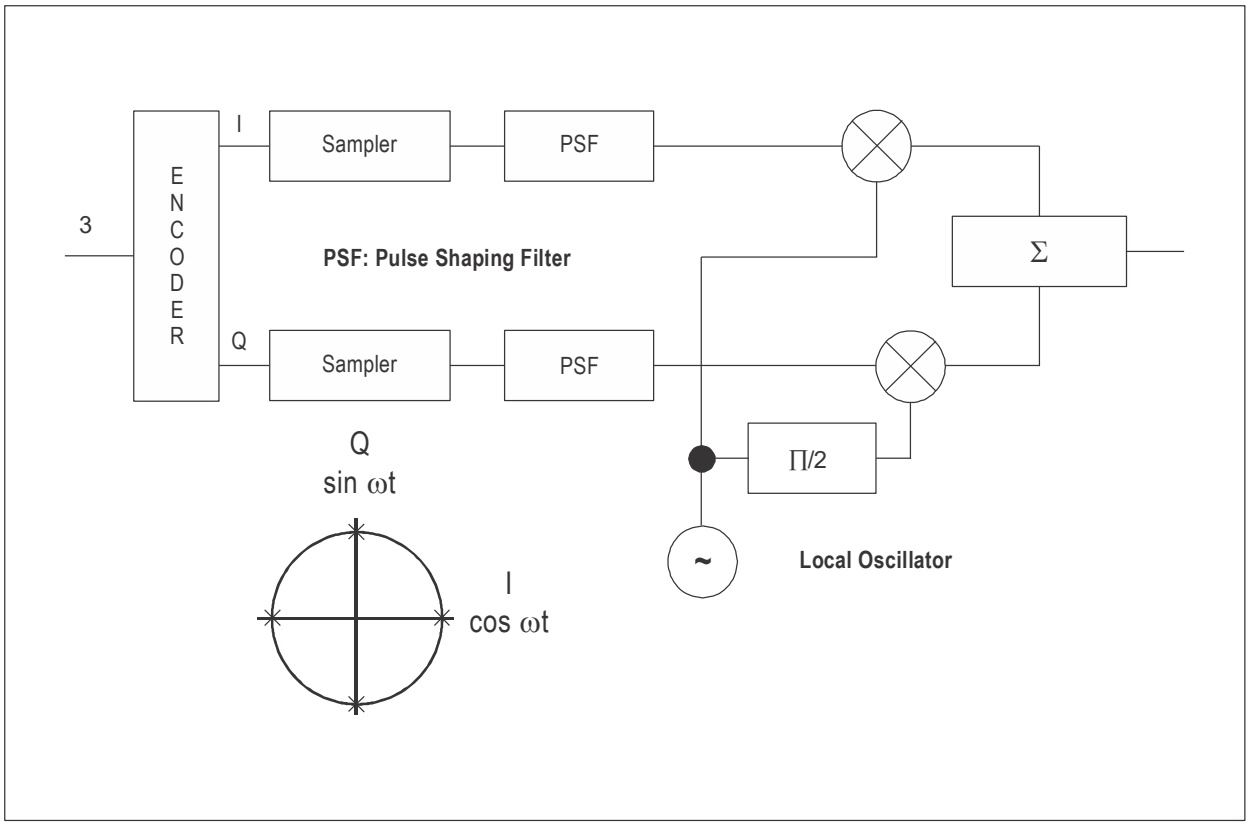

Figure B-29. Example data modulation

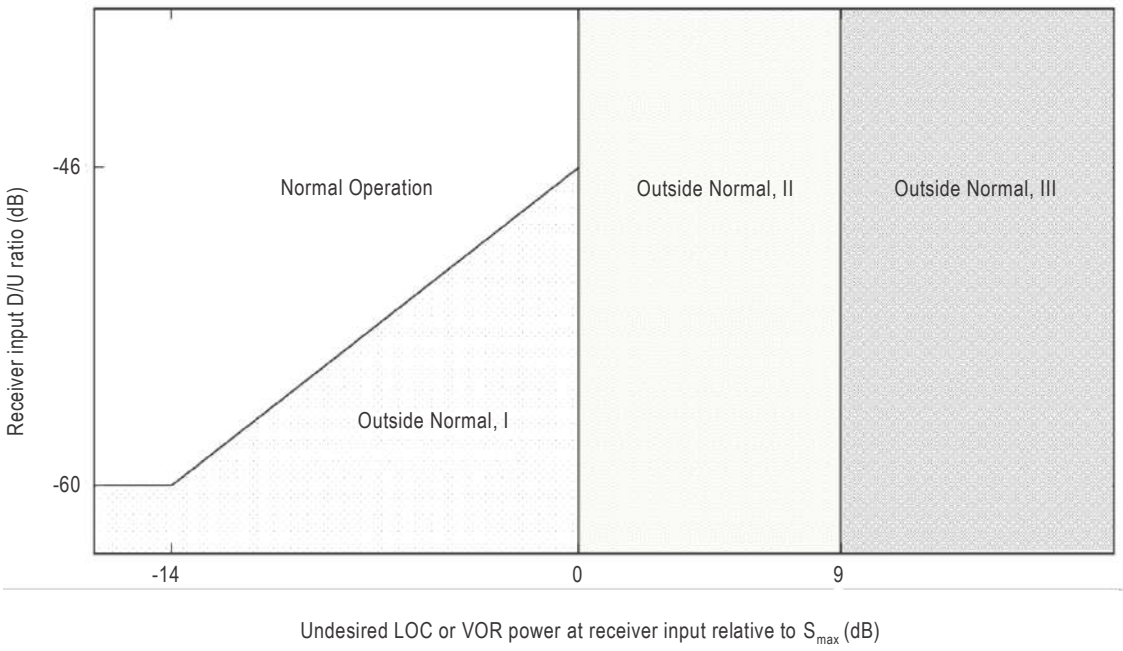

Notes:

1. *The region of the figure labelled "Normal Operation" is the one in which 3.6.8.2.2.6.4 applies, and consequently 3.6.8.2.2.3 is met (MFR ≤ 0.001). The lower boundary of the region is the line plotting the minimum acceptable D/U ratio specified in 3.6.8.2.2.6.4 as a function of the undesired power, for values of the undesired power up to S_{max}.*
2. *In the other three regions of the figure, 3.6.8.2.2.6.4 does not apply. Consequently, 3.6.8.2.2.3 may not be met, and MFR may be as high as 1.*
3. *The region labelled "Outside Normal, I" is the one in which the D/U ratio is lower than the minimum acceptable value defined in 3.6.8.2.2.6.4 and the undesired power is lower or equal to S_{max}.*
4. *The region labelled "Outside Normal, II" is the one in which the undesired power is higher than S_{max} but lower than S_{max} + 9 dB. The requirement for receiver recovery from short-term excess undesired signal power specified in 3.6.8.2.2.6.5 applies in this region.*
5. *The region labelled "Outside Normal, III" is the one in which the undesired power is higher than S_{max} + 9 dB. Because this region is outside the expected operational environment, no receiver performance requirements apply.*

Figure B-30. GBAS VDB receiver regions of operation in the presence of an undesired signal in the fortieth or beyond adjacent 25 kHz channel

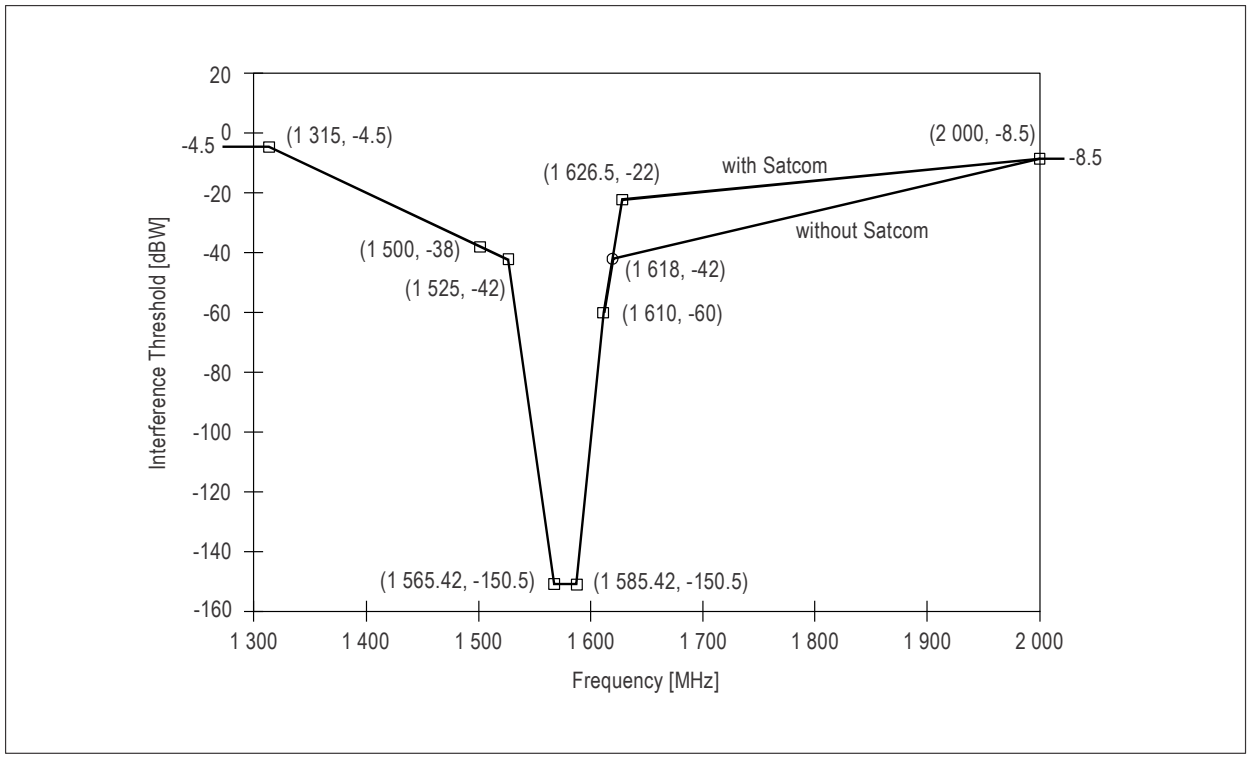

Figure B-31. CW interference thresholds for GPS L1 and SBAS L1 receivers in steady-state navigation

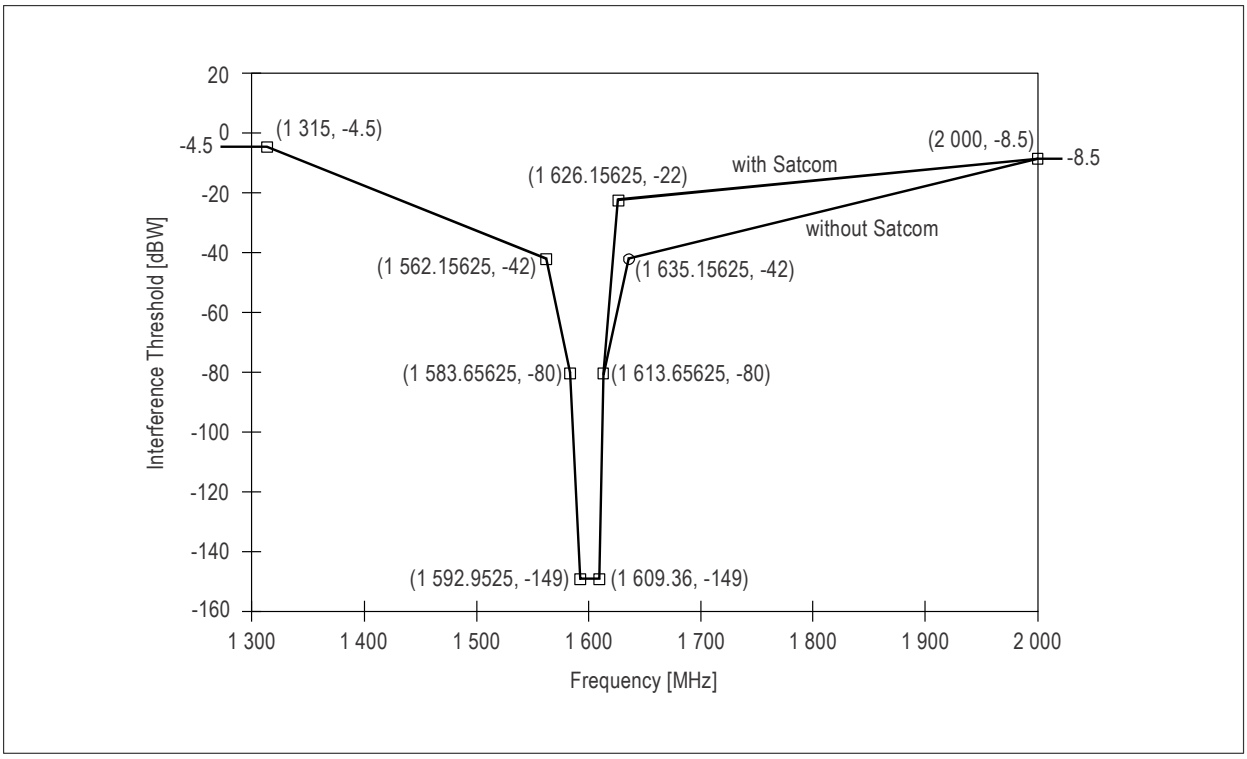

Figure B-32. CW interference thresholds for GLONASS FDMA signals receivers in L1 band in steady-state navigation

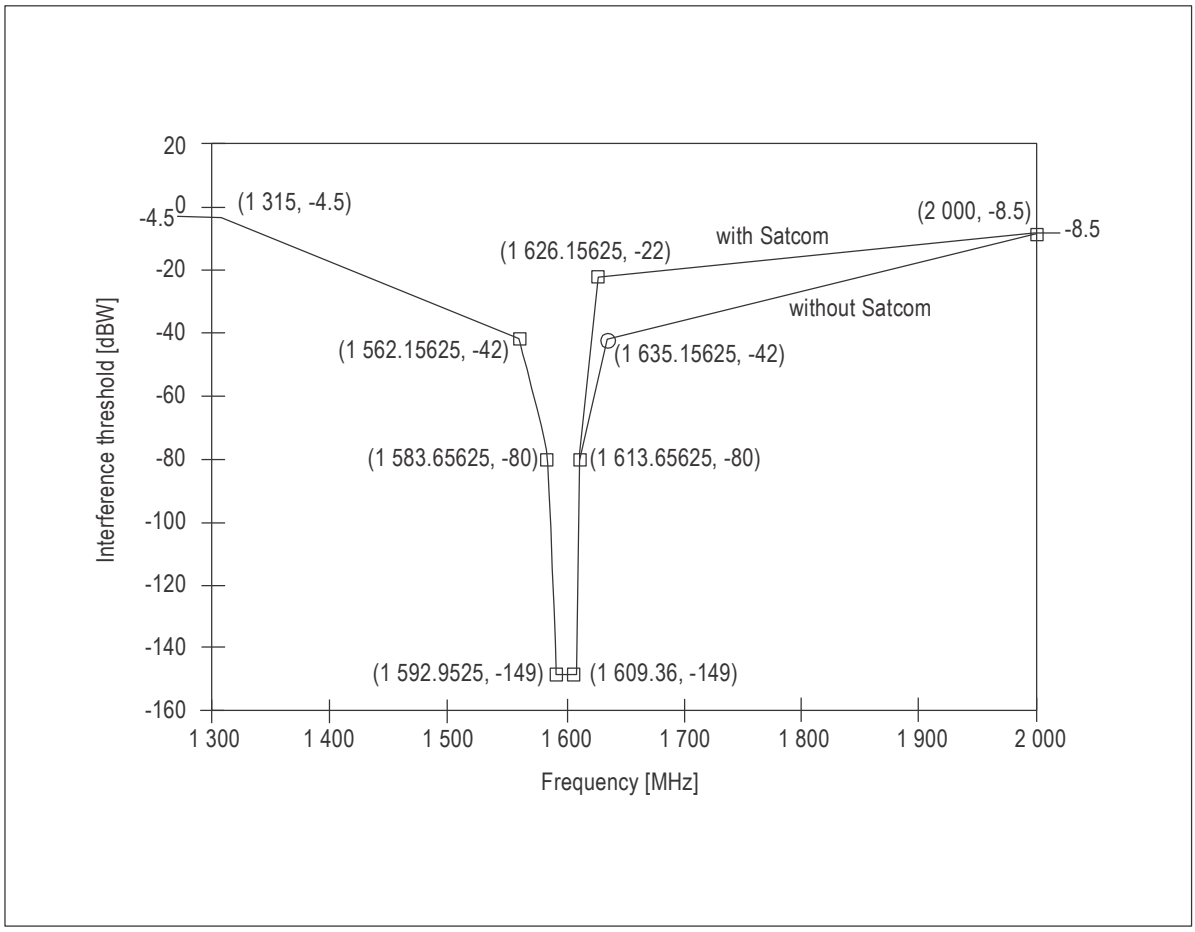

Figure B-33. CW interference thresholds for GLONASS CDMA signals receivers in L1 band in steady-state navigation

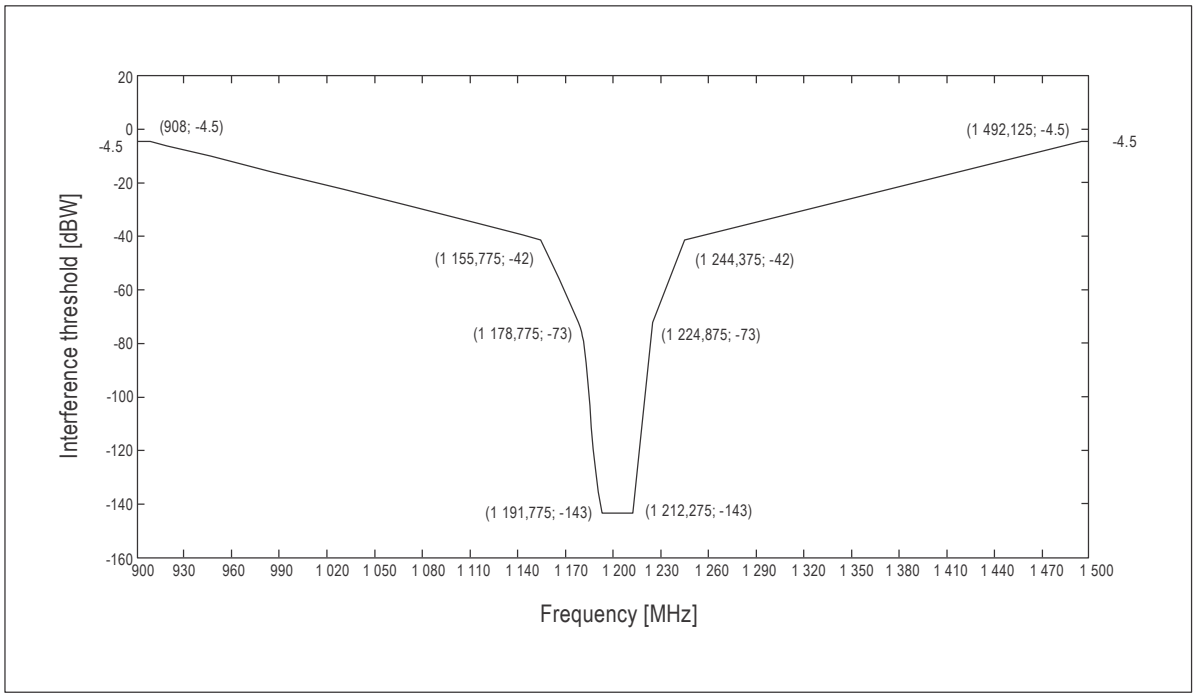

Figure B-34. CW interference thresholds for GLONASS CDMA signals receivers in L3 band in steady-state navigation

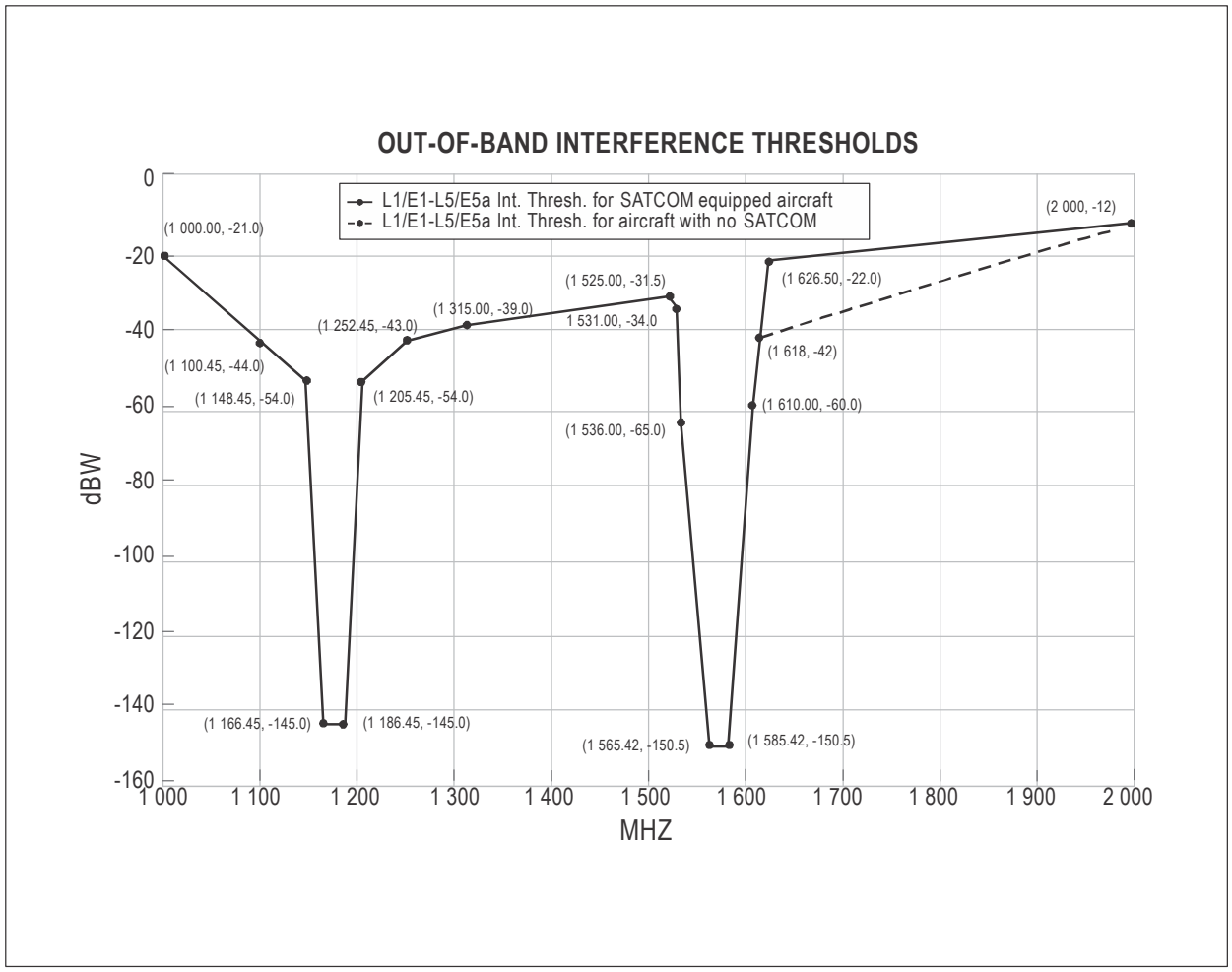

Figure B-35. CW interference thresholds for GPS L1/L5, Galileo E1/E5A and DFMC SBAS receivers

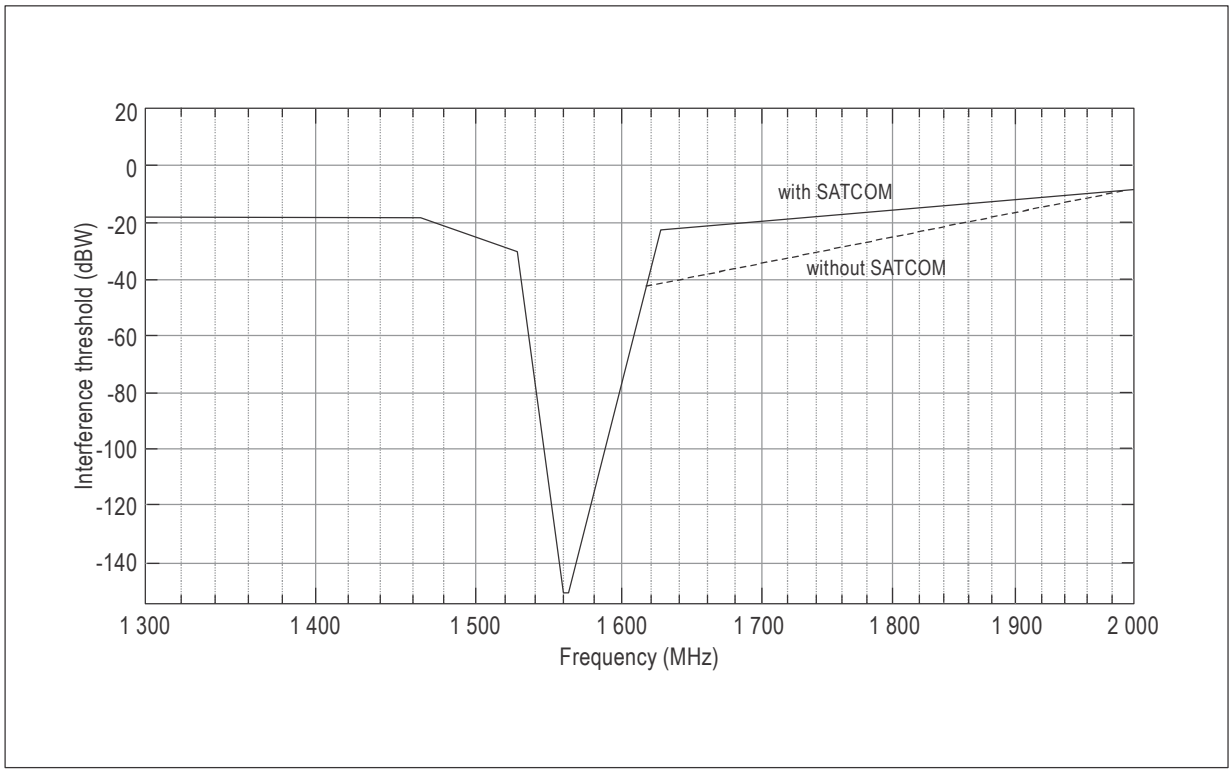

Figure B-36A. CW interference thresholds for BDS B1I receivers in steady-state navigation

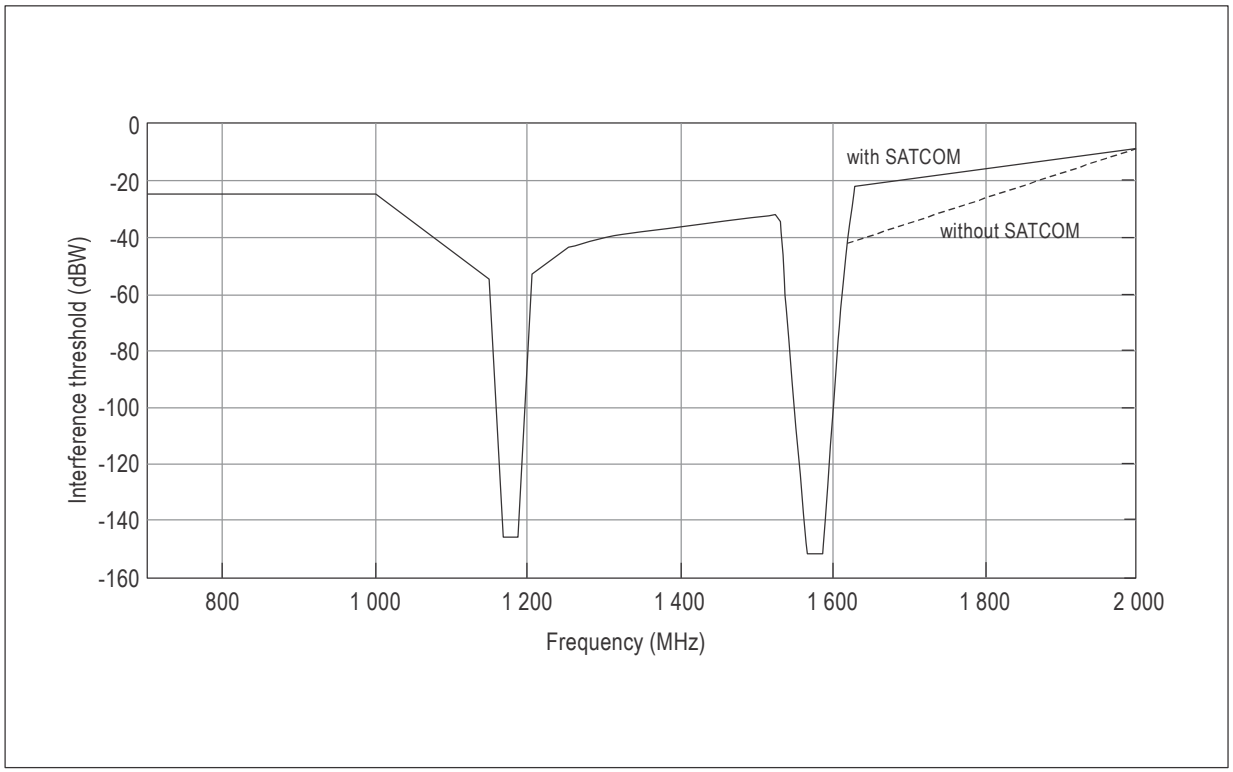

Figure B-36B. CW interference thresholds for BDS B1C/B2a receivers in steady-state navigation

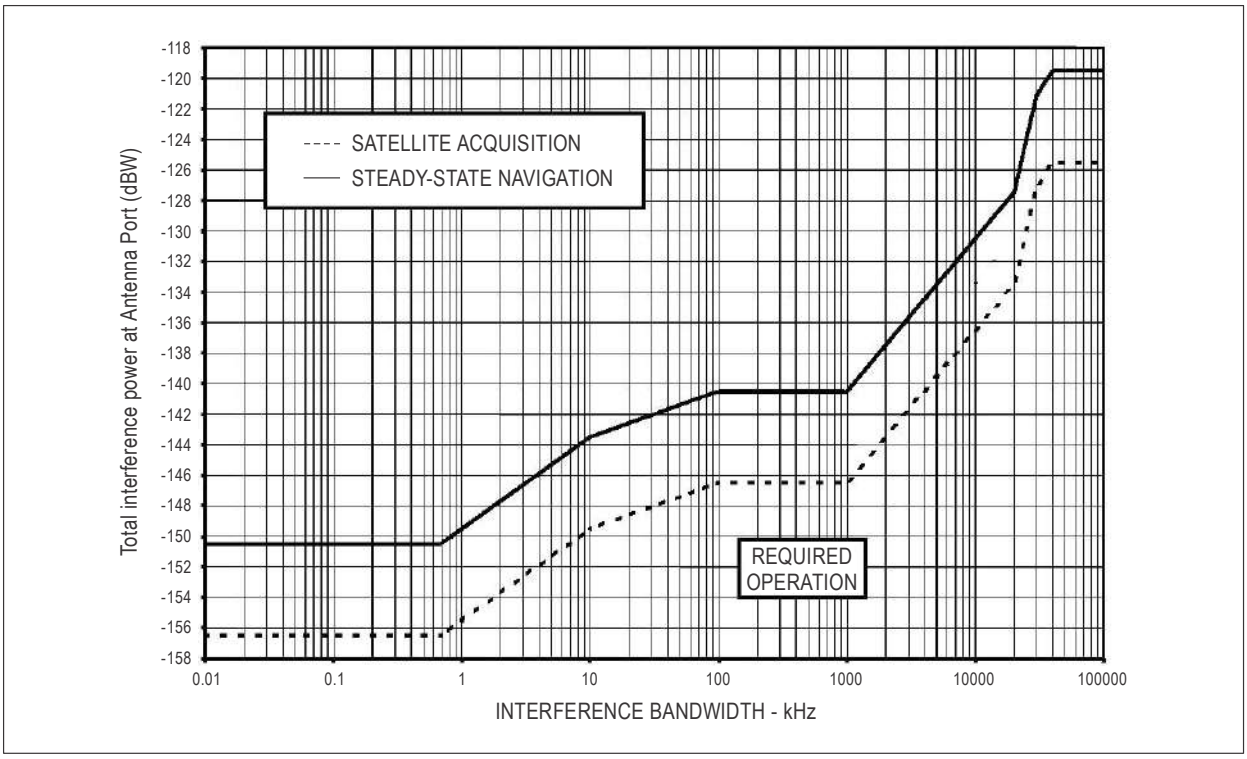

Figure B-37. Interference thresholds versus bandwidth for GPS L1 and SBAS L1 receivers

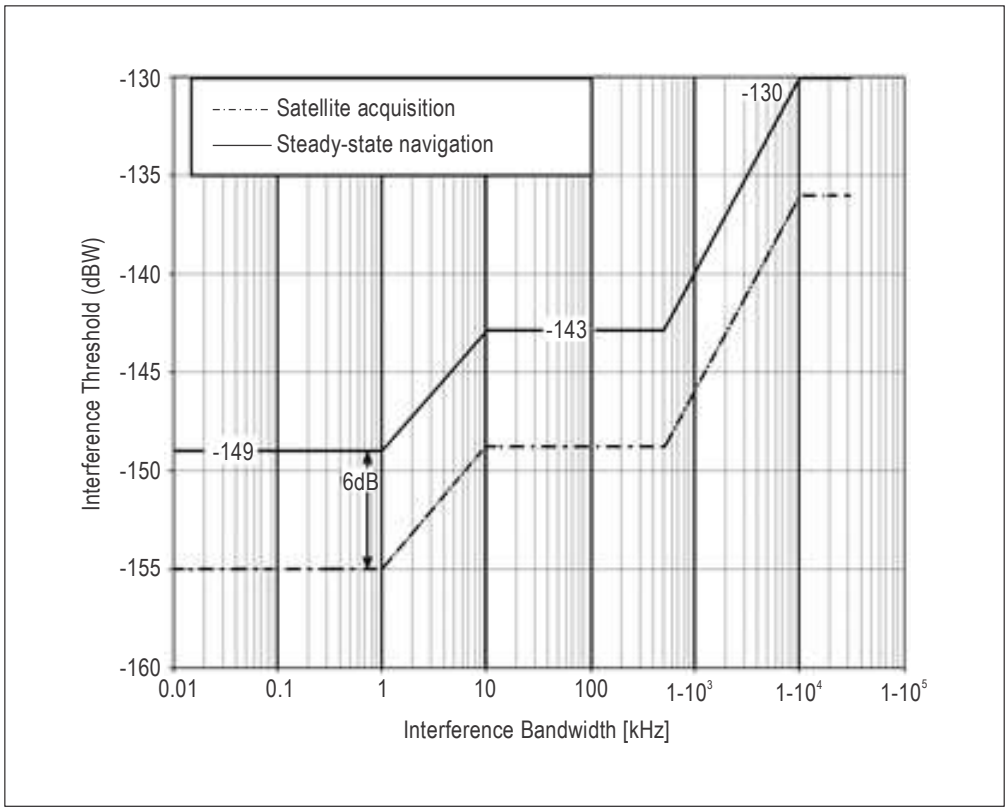

Figure B-38. Interference thresholds versus bandwidth for GLONASS FDMA signals receivers in L1 band

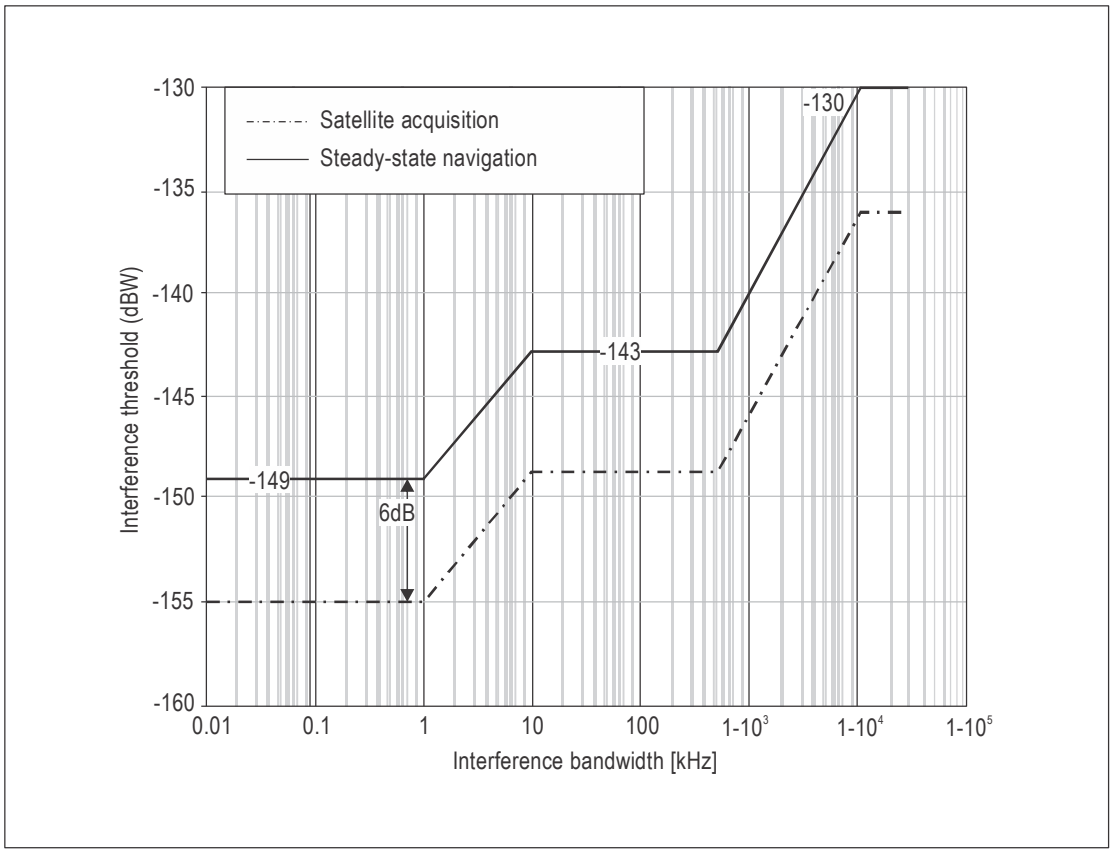

Figure B-39. Interference thresholds versus bandwidth for GLONASS CDMA signals receivers in L1 band

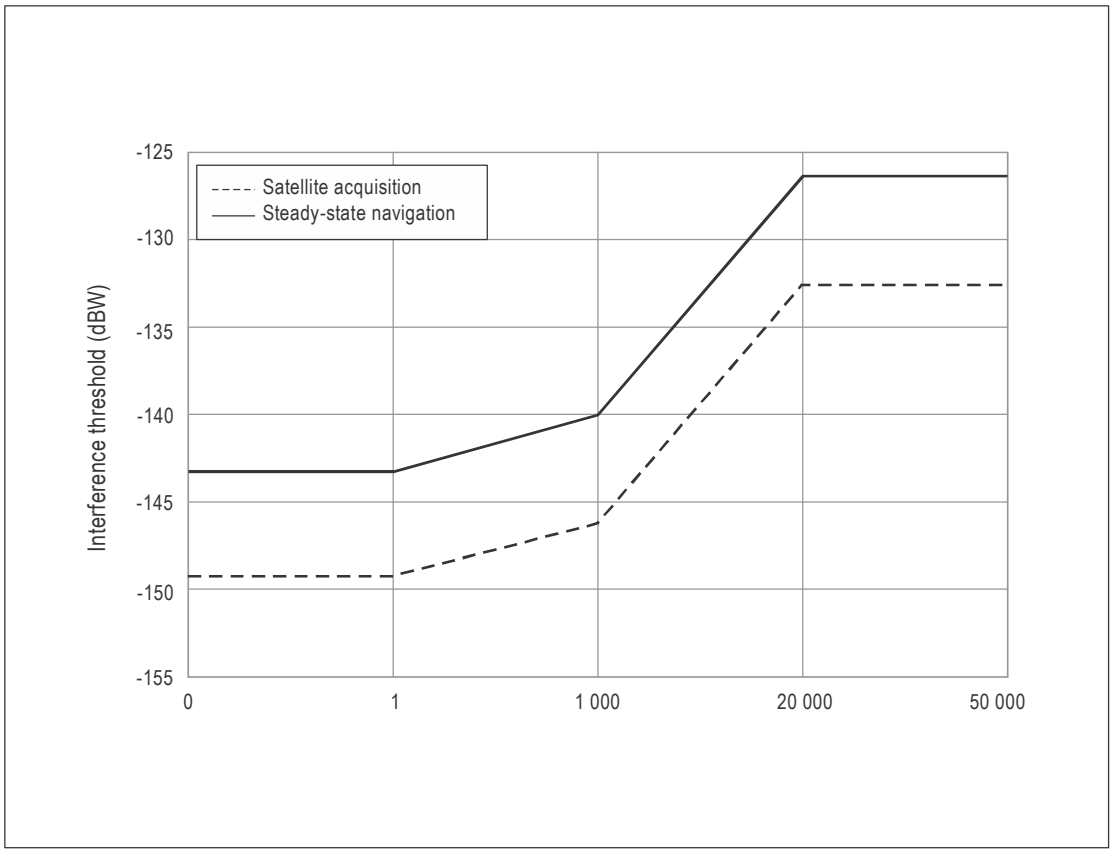

Figure B-40. Interference thresholds versus bandwidth for GLONASS CDMA signals receivers in L3 band

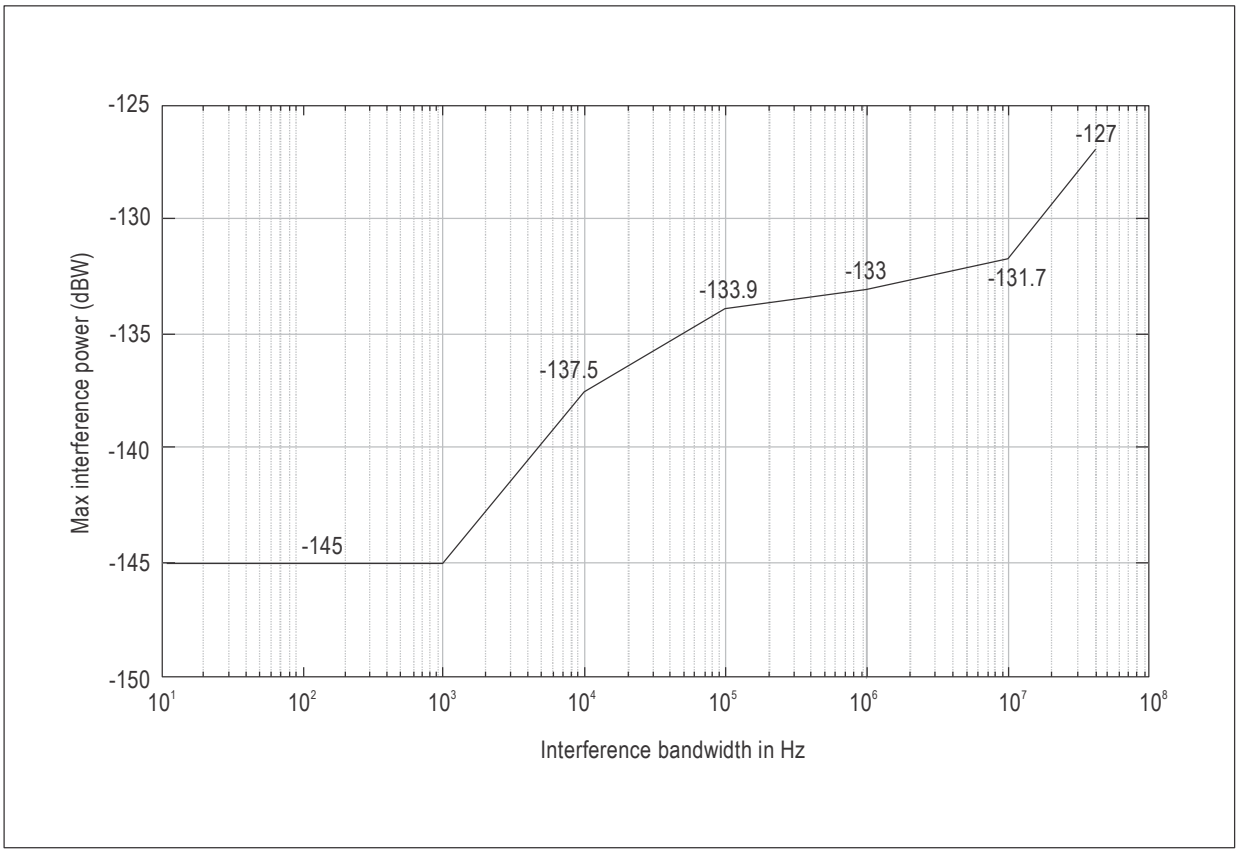

Figure B-41. Interference thresholds versus bandwidth for GPS L1/L5, Galileo E1/E5A and DFMC SBAS receivers

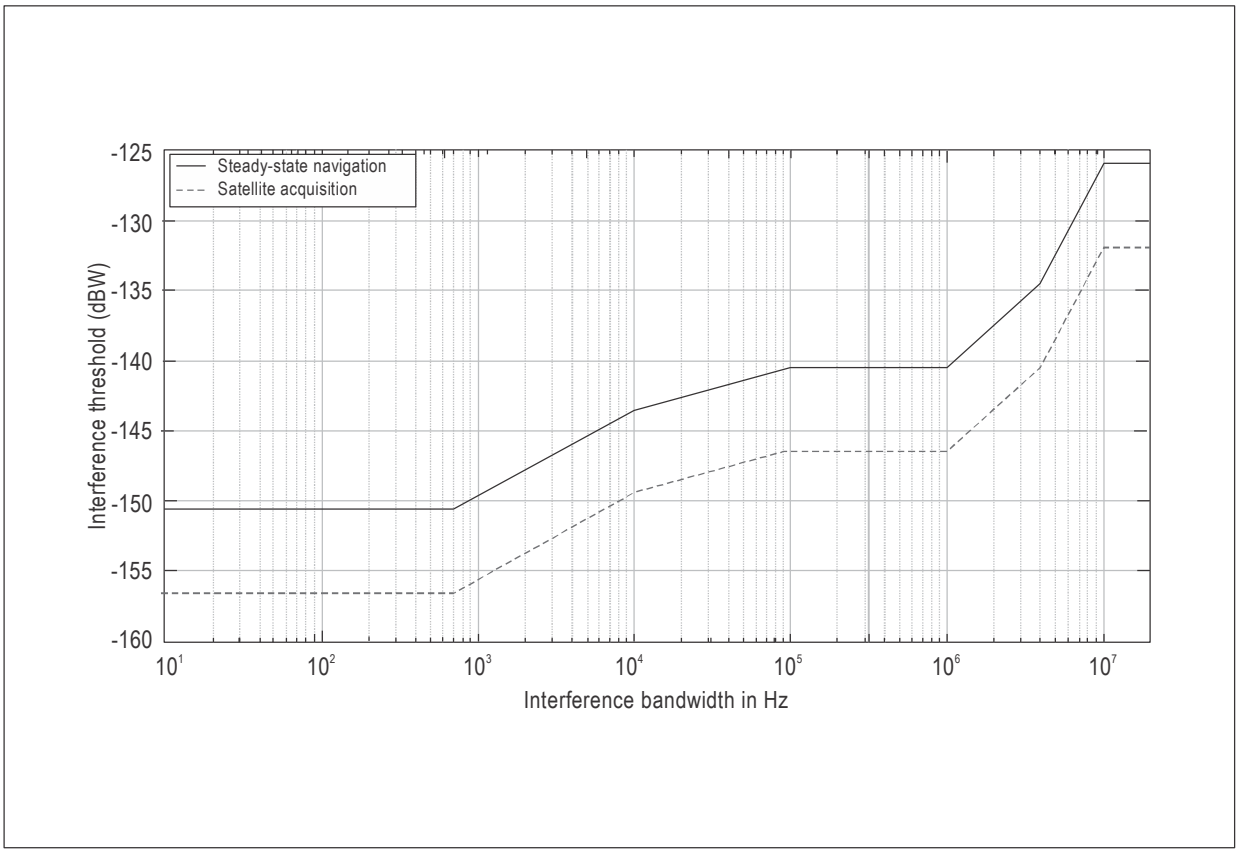

Figure B-42A. Interference thresholds versus bandwidth for BDS B1I receiver

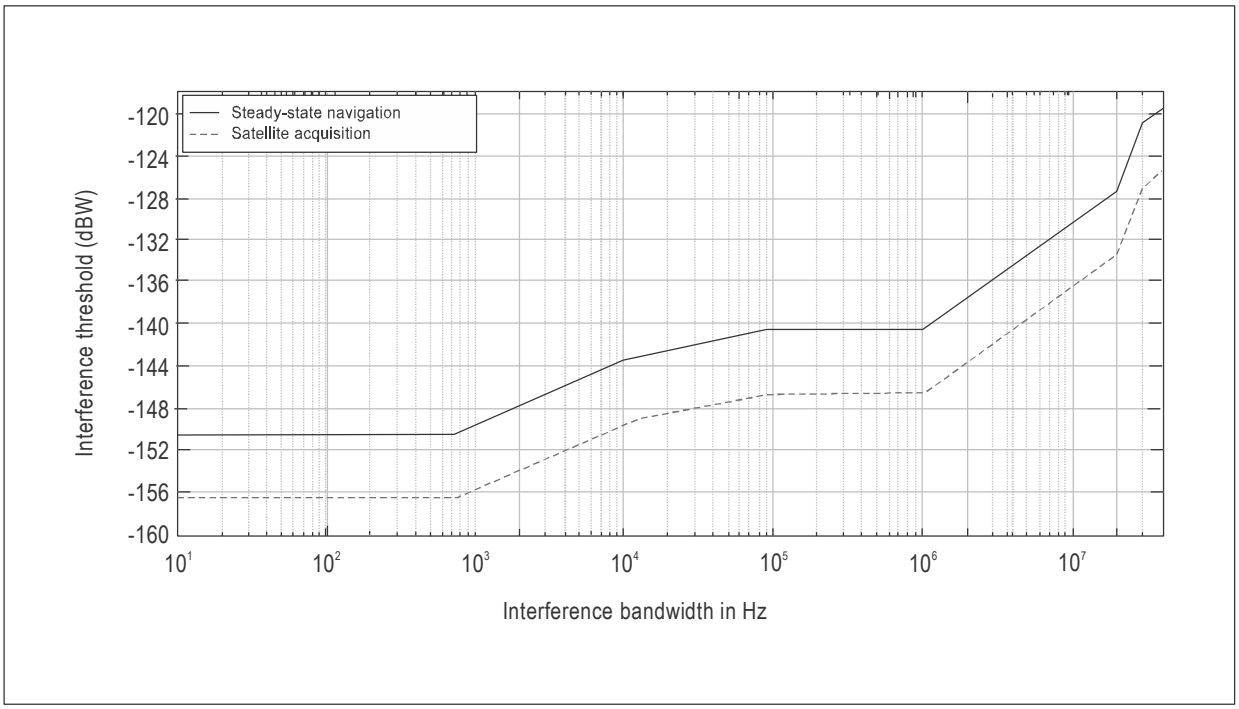

Figure B-42B. Interference thresholds versus bandwidth for BDS B1C receiver

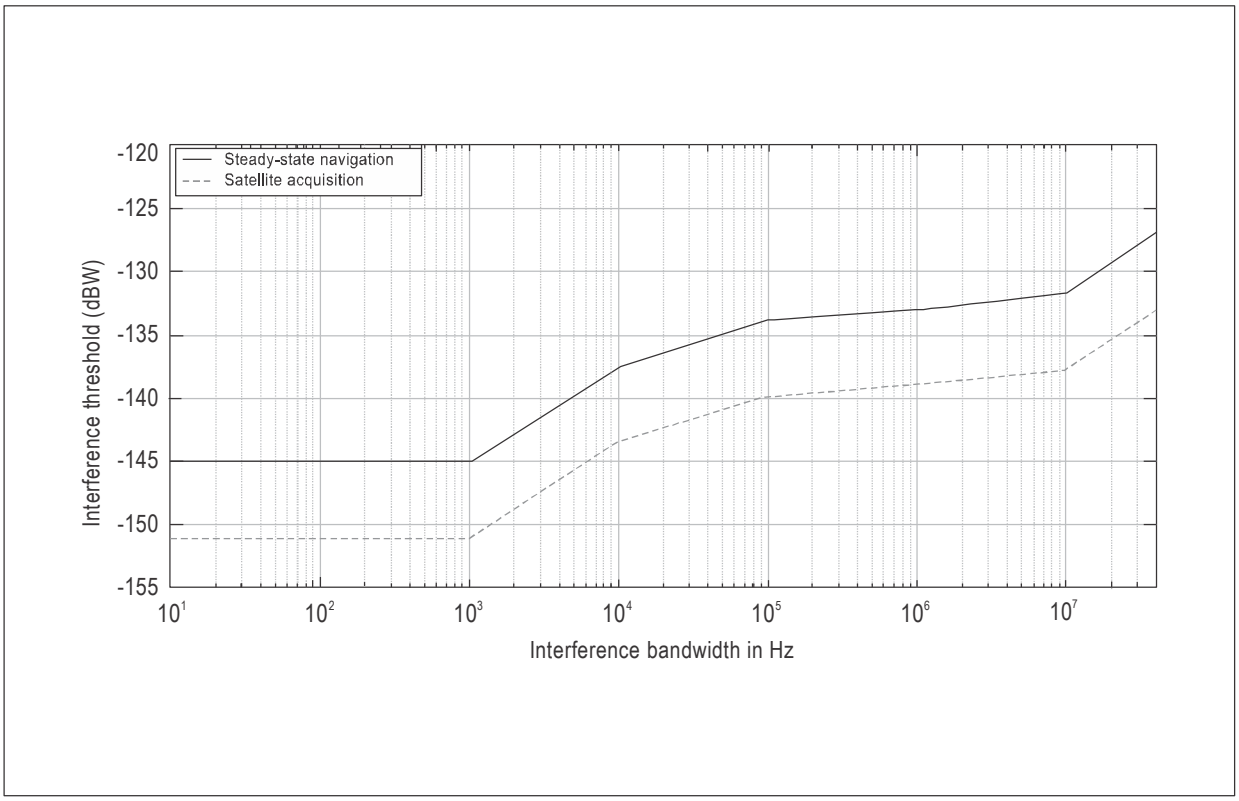

Figure B-42C. Interference thresholds versus bandwidth for BDS B2a receiver

ATTACHMENT A. DETERMINATION OF INTEGRITY AND CONTINUITY OF SERVICE OBJECTIVES USING THE RISK TREE METHOD

1. The risk tree method is a graphical method of expressing the logical relationship between a particular failure condition and the causes or failures leading to this condition. It is an application of fault tree analysis being used in the aerospace industry.

1.1 The method employs a set of logic symbols to show the relationship between the various causes of failure. The following symbols are used in this guidance material.

The "AND" gate describes the logical operation whereby the coexistence of all input events is required to produce the output event.

The "OR" gate defines a situation whereby the output event will exist if one or more of the input events exist.

The rectangle identifies an event that results from the combination of fault or failure events through the input logic gate.

The circle describes a primary failure event that requires no further development. Frequency and mode of failure of items so identified are derived from empirical data.

1.2 The method gives a visual representation of sequences and combinations of events leading to the top failure event. The method can also be used to determine the probability of the top event occurring, provided that the probabilities of the individual events are known or can be estimated. In the case of simple fault trees probabilities can be directly calculated, but care must be taken if the primary failure events are not independent, i.e. if failure events are common to more than one path.

1.3 In this guidance material the acceptable probability of the top level event occurring is determined by the risk allocation and the fault tree is used to further partition the risk into integrity and continuity of service risks. Therefore, the term "risk tree" is used rather than "fault tree".

2. A generic risk tree for aircraft landing operations is given in Figure A-1. The top event for this tree is taken to be the loss of the aircraft due to a failure of the non-aircraft guidance system. The causes of this event are either an integrity failure of the primary non-aircraft guidance equipment or a continuity of service (COS) failure of the non-aircraft guidance system (i.e. both the primary system and any secondary system used to support a discontinued approach/missed approach). The primary non-aircraft guidance system is considered to have a number of elements, 1 to N, for example azimuth, elevation and DME/P in the case of MLS. The secondary guidance system may be an alternative non-aircraft system, or in some cases an aircraft navigation system such as an inertial reference system.

2.1 The following probabilities can be defined:

P_a = Probability of aircraft loss due to a failure of the non-aircraft guidance system.

P_b = Probability of aircraft loss due to primary guidance integrity failure.

P_c = Probability of aircraft loss due to COS failure.

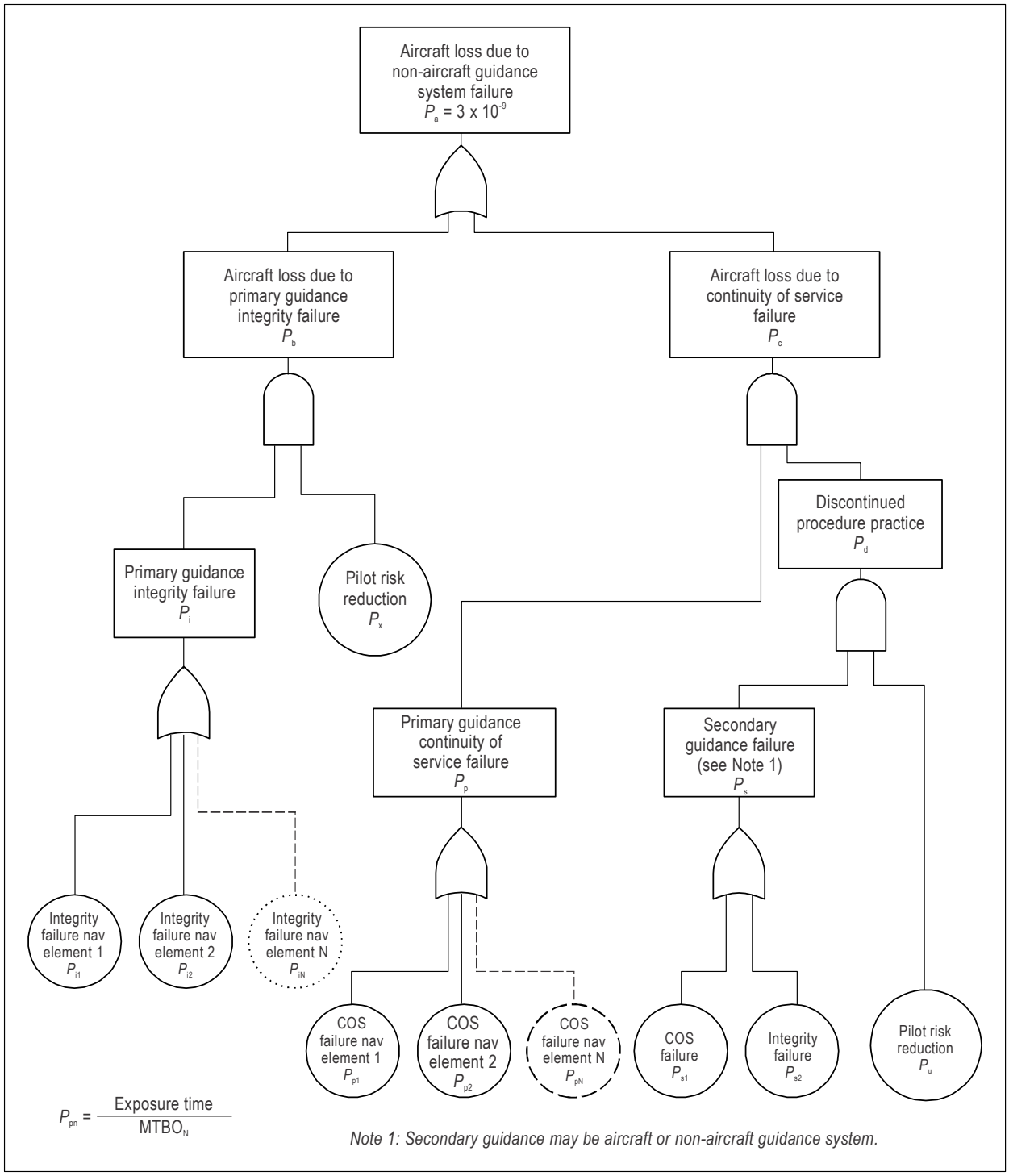

Figure A-1. Generic risk tree

P_x = Probability that the pilot is unable to detect and intervene successfully following a primary guidance integrity failure. This risk reduction factor is only relevant in those cases where an integrity failure of the guidance system may be detected by the pilot, e.g. at decision height in a Category I ILS approach.

P_p = Probability of primary guidance COS failure.

P_d = Probability of aircraft loss during a discontinued approach/missed approach procedure.

P_i = Probability of primary guidance integrity failure.

P_{iN} = Probability of integrity failure in Nav element N.

P_{pN} = Probability of COS failure in Nav element N.

P_s = Probability of aircraft loss during a discontinued approach/missed approach with secondary guidance.

P_{s1} = Probability of secondary guidance COS failure.

P_{s2} = Probability of secondary guidance integrity failure.

P_u = Probability that the pilot is unable to intervene successfully following primary guidance COS failure with no secondary guidance available.

where:

$P_a = P_b + P_c$

$P_b = P_i \times P_x$

$P_i = P_{i1} + P_{i2} + \ldots P_{iN}$

$P_c = P_p \times P_d$

$P_p = P_{p1} + P_{p2} + \ldots P_{pN}$

$P_d = P_s \times P_u$

$P_s = P_{s1} + P_{s2}$

2.2 The acceptable probability of the top event, P_a, can be determined by partitioning the global risk factor for the approach and landing operation to the various classes of accident. Using this method an acceptable value for P_a of 3×10^{-9} has been determined. This is consistent with the smallest probability that can be assigned to each ground navigation element, which is 1×10^{-9} (normally divided equally between integrity and COS failures).

2.3 The risk analysis above assumes no equipment design errors.

3. *Example of the use of the risk tree — MLS Category III basic operations (Figure A-2).*

3.1 In this case there are only two navigation elements involved (e.g. azimuth and elevation). It is assumed that no secondary guidance is available following a COS failure of the primary guidance, the normal procedure being to maintain heading and climb.

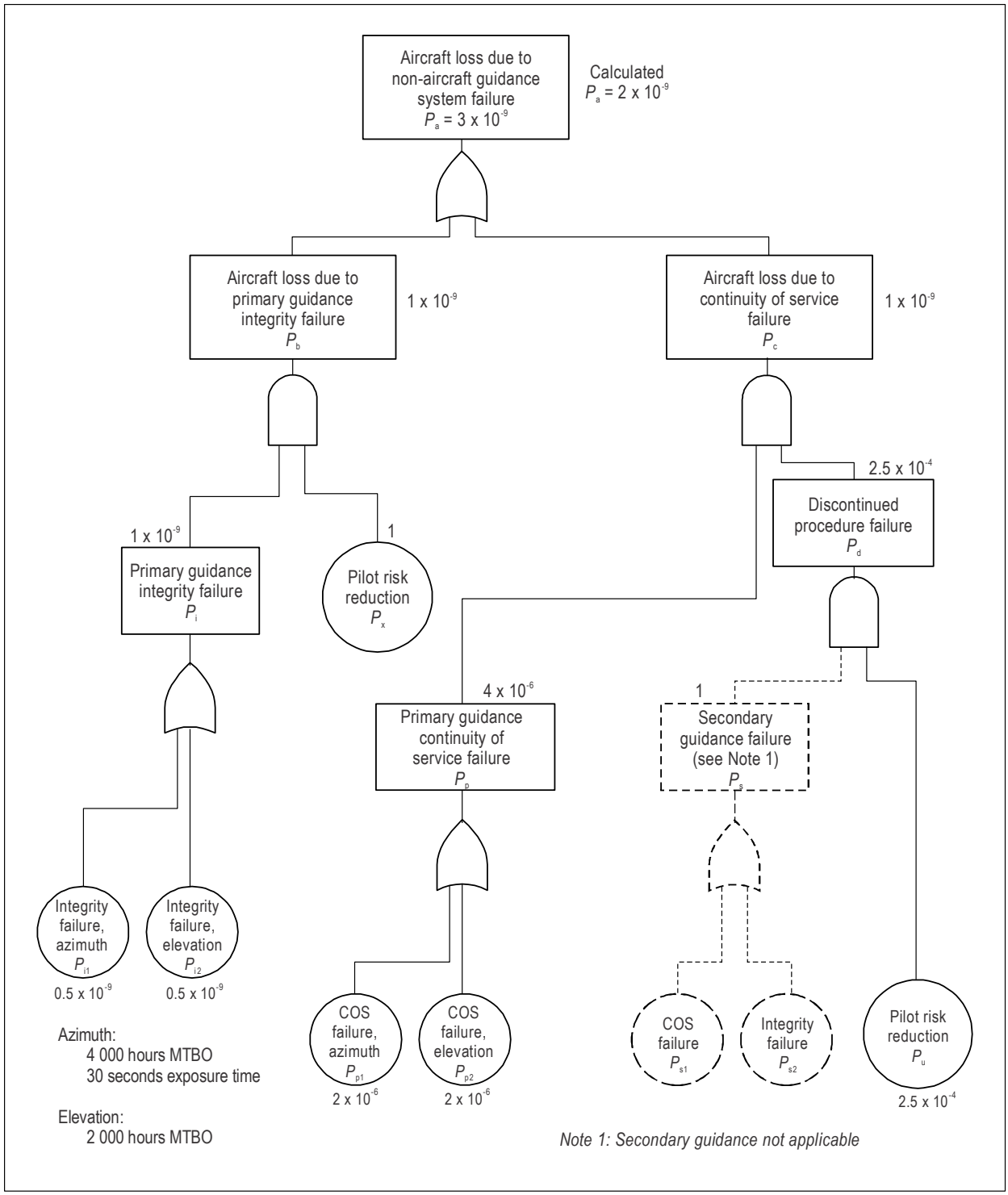

Figure A-2. MLS Category III landing risk tree

$P_{i1} = P_{i2} = 0.5 \times 10^{-9}$

$P_{p1} = P_{p2} = 2 \times 10^{-6}$

Note.— These figures are from Attachment G, Table G-15, Level 4 and assume exposure times of 30 and 15 seconds, and MTBOs of 4 000 and 2 000 hours for the azimuth and elevation elements respectively.

$P_s = 1.0$

Note.— Since there is no guided discontinued approach/missed approach procedure using secondary guidance, the probability of an accident during the procedure is taken to be 1.

$P_x = 1.0$

Note.— It is assumed in this example that in a Category III operation the pilot is unable to intervene in the event of an integrity failure in the ground system. The risk reduction factor is therefore equal to 1.

$P_u = 2.5 \text{ x } 10^{-4}$

Note.— The pilot risk reduction factor is estimated at 1 in 4 000 based on a study of accidents to aircraft conducting approaches to land using ground guidance systems. This is the risk reduction factor assumed due to pilot intervention following a continuity of service failure.

Therefore:

$P_i = 1 \times 10^{-9}$

$P_p = 4 \times 10^{-6}$

$P_d = 2.5 \times 10^{-4}$

$P_c = 4 \times 10^{-6} \times 2.5 \times 10^{-4} = 1 \times 10^{-9}$

$P_b = 1 \times 10^{-9} \times 1$

and:

calculated $P_a = 2 \times 10^{-9}$.

3.2 There is therefore a margin of 1×10^{-9} on the generic requirement.

4. *Application of the risk tree to an MLS/RNAV approach in an obstacle rich environment (Figure A-3).*

4.1 In this case there are three navigation elements (i.e. azimuth, elevation and DME/P) and all are assumed to meet the integrity and COS requirements for Level 4 azimuth equipment; i.e integrity = $1 - 0.5 \times 10^{-9}$ and MTBO = 4 000 hours.

$P_{i1} = P_{i2} = P_{i3} = 0.5 \times 10^{-9}$

$P_x = 1.0$

Note.— It is assumed that the pilot is unable to intervene in the event of an integrity failure in the ground system.

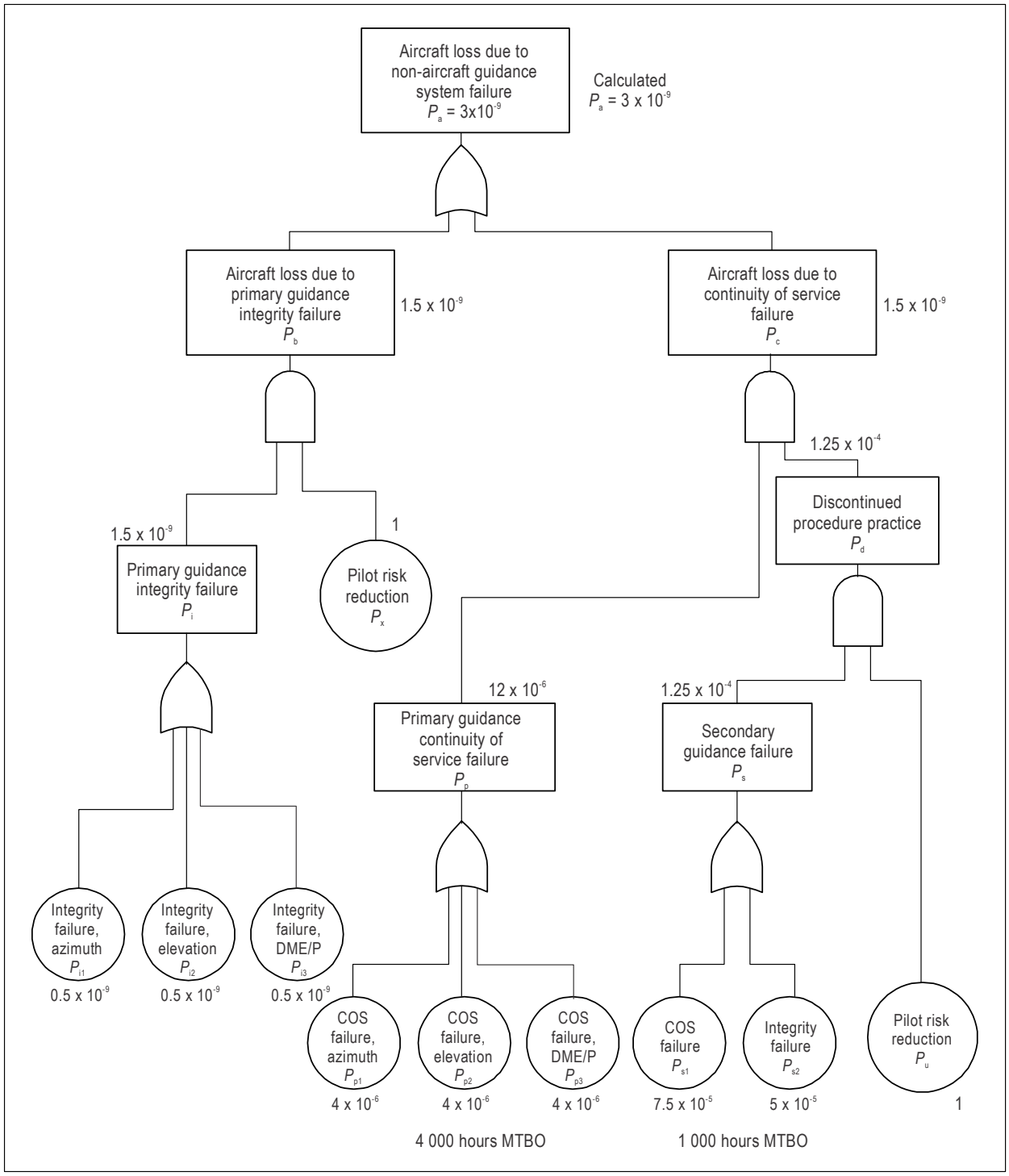

Figure A-3. MLS/RNAV obstacle rich risk tree

$P_{p1} = P_{p2} = P_{p3} = 4 \times 10^{-6}$

Note.— This assumes an obstacle exposure time (OET) of 60 seconds, and an MTBO of 4 000 for all ground elements.

$P_u = 1.0$

Note.— It is assumed that an unguided discontinued approach/missed approach procedure is unacceptable. The probability of an accident during such a procedure is therefore taken to be 1.

4.2 In the case of an MLS/RNAV procedure in an obstacle rich environment, it is assumed that secondary guidance will be essential to execute a safe discontinued approach/missed approach procedure during the period of exposure to the obstacles.

$P_{s1} = 7.5 \times 10^{-5}$

Note.— This is the probability of a COS failure of the secondary guidance ground equipment. It is assumed here that the secondary guidance system has a MTBO of 1 000 hours and that the exposure time is 270 seconds. The exposure time to a failure of the secondary guidance is dependent on the point in the procedure at which the availability of secondary guidance is confirmed. Assuming that this would be prior to the commencement of the MLS/RNAV procedure, and that the pilot would not be required to reconfirm the availability of secondary guidance before commencing the critical obstacle rich part of the procedure, the exposure time could be several minutes.

$P_{s2} = 5 \times 10^{-5}$

Note.— This is the integrity required by the secondary guidance system.

Therefore:

$P_i = 1.5 \times 10^{-9}$

$P_b = 1.5 \times 10^{-9}$

$P_p = 12 \times 10^{-6}$

$P_s = 7.5 \times 10^{-5} + 5 \times 10^{-5} = 1.25 \times 10^{-4}$

$P_d = 1.25 \times 10^{-4}$

$P_c = 12 \times 10^{-6} \times 1.25 \times 10^{-4} = 1.5 \times 10^{-9}$

and:

calculated $P_a = 3 \times 10^{-9}$, as required.

Note.— For obstacle exposure times greater than 60 seconds, it will be necessary to either increase the MTBOs of the primary guidance or to increase the risk reduction factor due to the secondary guidance. For example, if the exposure time is increased to 90 seconds, the MTBOs of the primary guidance must be increased to 6 000 hours or the MTBO of the secondary guidance increased to 2 250 hours. There are clearly trade-offs between the reliability of the primary guidance, the exposure time, and the reliability and integrity of the secondary guidance. The risk tree method can be used to examine individual MLS/RNAV procedures and determine the appropriate reliability and integrity requirements for the primary and secondary guidance.

ATTACHMENT B. STRATEGY FOR INTRODUCTION AND APPLICATION OF NON-VISUAL AIDS TO APPROACH AND LANDING

(see Chapter 2, 2.1)

1. Introduction

1.1 Various elements have an influence on all weather operations in terms of safety, efficiency and flexibility. The evolution of new techniques requires a flexible approach to the concept of all weather operations to obtain full benefits of technical development. To create this flexibility a strategy enables, through identification of its objectives and thoughts behind the strategy, incorporation of new technical developments or ideas into this strategy. The strategy does not assume a rapid transition to a single globally established system or selection of systems to support approach and landing operations.

1.2 The strategy addresses the application of non-visual aids to approach and landing with vertical guidance (APV) and precision approach and landing operations.

2. Objectives of strategy

The strategy must:

a) maintain at least the current safety level of all weather operations;

b) retain at least the existing level or planned improved level of service;

c) support lateral and vertical path guidance as outlined in Resolution A37-11;

d) maintain global interoperability;

e) provide regional flexibility based on coordinated regional planning;

f) support infrastructure investment planning cycles;

g) be maintained by periodic review; and

h) take account of economic, operational and technical issues.

3. Considerations

3.1 General

The following considerations are based on the assumption that the operational requirement and the required commitment are available and the required effort is applied.

3.2 ILS-related considerations

a) There is a limited risk that ILS Category II or III operations cannot be safely sustained at specific locations;

b) ILS receivers have implemented interference immunity performance Standards contained in Annex 10, Volume I, Chapter 3, 3.1.4;

c) in some regions, expansion of ILS is limited by channel availability (40 paired ILS/DME channels);

d) in most areas of the world, ILS can be maintained in the foreseeable future;

e) due to cost and efficiency considerations, some States are rationalizing some of their ILS infrastructure at Category I airports with limited operational usage; and

f) based on user-equipage considerations, GNSS-based approaches providing lateral and vertical path guidance may offer a cost-effective option when considering introduction of Category I approach service or when replacing or removing an existing ILS.

3.3 MLS-related considerations

a) MLS Category III is operational;

b) MLS has been implemented at specific locations to improve runway utilization in low visibility conditions; and

c) further MLS deployment is unlikely.

3.4 GNSS-related considerations

a) Standards and Recommended Practices (SARPs) are in place for GNSS with augmentation to support APV and Category I precision approach;

b) GNSS with satellite-based augmentation system (SBAS) for APV and Category I precision approach operations is operational;

c) GNSS with ground-based augmentation system (GBAS) for Category I precision approach operations is operational;

d) it is expected that an internationally accepted GBAS will be available for Category II and III operations in the 2018-2020 timeframe;

e) ongoing dual-frequency, multi-constellation (DFMC) GNSS developments will enhance performance of GNSS augmentations as well as enable new operational capabilities in the 2025 timeframe

f) technical and operational issues associated with GNSS approach, landing and departure operations, such as vulnerabilities due to ionospheric propagation and radio frequency interference, must be addressed in a timely manner; and

g) issues associated with DFMC GNSS must be addressed in a timely manner.

3.5 Multi-modal airborne approach and landing capability considerations

To enable this strategy, a multi-modal airborne approach and landing capability is necessary and is expected to be available.

3.6 Other considerations

a) There is an increasing demand for Category II and/or III operations in some areas;

b) GNSS can potentially offer unique operational benefits for low-visibility operations, including new procedures, flexible siting requirements and provision of airport surface guidance;

c) only the three standard systems (ILS, MLS and GNSS with augmentation as required) are considered to play a role in supporting all weather operations. The use of head-up displays in conjunction with enhanced and synthetic vision systems may provide operational benefits;

d) a consequence of the global strategy is that there will not be a rapid or complete transition from ILS to GNSS or MLS. It is therefore essential for the implementation of the strategy that the radio frequency spectrum used by all of these systems be adequately protected;

e) the potential operational benefits resulting from the introduction of new landing systems may be limited by the constraints of mixed-system aircraft equipage;

f) APV operations may be conducted using GNSS with augmentation as required or barometric vertical guidance, and GNSS with ABAS lateral guidance;

g) APV operations provide enhanced safety and generally lower operational minima as compared to non-precision approaches;

h) adequate redundancy should be provided when terrestrial navigation aids are withdrawn; and

i) rationalization should be part of a national or regional strategy on terrestrial navigation aids; guidance is provided in Attachment H.

4. Strategy

Based on the considerations above, the need to consult aircraft operators, airport operators and international organizations, and to ensure safety, efficiency and cost-effectiveness of the proposed solutions, the global strategy is to:

a) continue ILS operations to the highest level of service as long as operationally acceptable and economically beneficial;

b) continue MLS operations where operationally required and economically beneficial;

c) implement GNSS with augmentation (i.e. ABAS, SBAS, GBAS) as required for APV and precision approach operations where operationally required and economically beneficial;

d) promote the continuing development and use of a multi-modal airborne approach and landing capability;

e) promote the use of APV operations, particularly those using GNSS vertical guidance, to enhance safety and accessibility; and

f) enable each region to develop an implementation strategy for these systems in line with this global strategy.

ATTACHMENT C. INFORMATION AND MATERIAL FOR GUIDANCE IN THE APPLICATION OF THE STANDARDS AND RECOMMENDED PRACTICES FOR ILS, VOR, PAR, 75 MHz MARKER BEACONS (EN-ROUTE), NDB AND DME

1. Introduction

The material in this Attachment is intended for guidance and clarification purposes and is not to be considered as part of the specifications or as part of the Standards and Recommended Practices contained in Volume I.

For the clarity of understanding of the text that follows and to facilitate the ready exchange of thoughts on closely associated concepts, the following definitions are included.

Definitions relating to the Instrument Landing System (ILS)

Note.— The terms given here are in most cases capable of use either without prefix or in association with the prefix "indicated". Such usages are intended to convey the following meanings:

No prefix: *the achieved characteristics of an element or concept.*

The prefix "indicated": *the achieved characteristics of an element or concept, as indicated on a receiver (i.e. including the errors of the receiving installation).*

Localizer system	ILS glide path system
Indicated course line. The locus of points in any horizontal plane at which the receiver indicator deflection is zero.	
Indicated course sector. A sector in any horizontal plane containing the indicated course line in which the receiver indicator deflection remains within full-scale values.	
Localizer course bend. A course bend is an aberration of the localizer course line with respect to its nominal position.	***ILS glide path bend.*** An ILS glide path bend is an aberration of the ILS glide path with respect to its nominal position.

2. Material concerning ILS installations

2.1 Operational objectives, design and maintenance objectives, and definition of course structure for Facility Performance Categories

2.1.1 The Facility Performance Categories defined in Chapter 3, 3.1.1 have operational objectives as defined by Category I, II or III operations. Definitions of such operations are given in Annex 6.

2.1.2 *Capabilities.* Relevant to these objectives will be the type of aircraft using the ILS and the capabilities of the aircraft flight guidance system(s). Modern aircraft fitted with equipment of appropriate design are assumed in these objectives. In practice, however, operational capabilities may extend beyond the specific objectives given at 2.1.1.

2.1.2.1 *Equipage for additional objectives.* The availability of fail-passive and fail-operational flight guidance systems in conjunction with an ILS ground system which provides adequate guidance with an appropriate level of continuity of service and integrity for the particular case can permit the attainment of operational objectives which do not coincide with those described at 2.1.1.

2.1.2.2 *Advanced operations.* For modern aircraft fitted with automatic approach and landing systems, the routine use of such systems is being encouraged by aircraft operating agencies in conditions where the progress of the approach can be visually monitored by the flight crew. For example, such operations may be conducted on Facility Performance Category I — ILS where the guidance quality and coverage exceeds basic requirements given at Chapter 3, 3.1.3.4.1 and extends down to the runway.

2.1.2.3 *ILS classification system.* In order to fully exploit the potential benefits of modern aircraft automatic flight control systems, there is a related need for a method of describing ground-based ILS more completely than can be achieved by reference solely to the Facility Performance Category. This is achieved by the ILS classification system using the three designated characters. It provides a description of those performance aspects which are required to be known from an operations viewpoint in order to decide the operational applications which a specific ILS could support.

2.1.2.4 The ILS classification scheme provides a means to make known the additional capabilities that may be available from a particular ILS ground facility, beyond those associated with the facilities defined in Chapter 3, 3.1.1. These additional capabilities can be exploited in order to permit operational use according to 2.1.2.1 and 2.1.2.2 to be approved down to and below the values stated in the operational objectives described in 2.1.1.

2.1.2.5 An example of the classification system is presented in 2.14.3.

Note.— The following guidance material is intended to assist States when they are evaluating the acceptability of ILS localizer courses and glide paths having bends. Although, by definition, course bends and glide path bends are related to the nominal positions of the localizer course and glide path respectively, the evaluation of high frequency aberrations is based on the deviations from the mean course or path. The material in 2.1.5 and Figure C-2 regarding the evaluation of bends indicates how the bends relate to the mean position of the course and path. Aircraft recordings will normally be in this form.

2.1.3 *Course bends.* Localizer course bends should be evaluated in terms of the course structure specified in Chapter 3, 3.1.3.4. With regard to landing and roll-out, this course structure is based on the desire to provide adequate guidance for manual and/or automatic operations along the runway in low visibility conditions. With regard to Facility Performance Category I in the approach phase, this course structure is based on the desire to restrict aircraft deviations, due to course bends (95 per cent probability basis) at the 30 m (100 ft) height, to lateral displacement of less than 10 m (30 ft). With regard to Facility Performance Categories II and III in the approach phase, this course structure is based on the desire to restrict aircraft deviations due to course bends (95 per cent probability basis) in the region between ILS Point B and the ILS reference datum (Facility Performance Category II) or Point D (Facility Peformance Category III), to less than 2 degrees of roll and pitch attitude and to lateral displacement of less than 5 m (15 ft).

Note 1.— Course bends are unacceptable when they preclude an aircraft under normal conditions from reaching the decision height in a stable attitude and at a position, within acceptable limits of displacement from the course line, from which a safe landing can be effected. Automatic and semi-automatic coupling is affected to a greater degree than manual coupling by the presence of bends. Excessive control activity after the aircraft has settled on an approach may preclude it from satisfactorily completing an approach or landing. Additionally, when automatic coupling is used, there may be an operational requirement to continue the approach below the decision height. Aircraft guidance can be satisfied if the specification for course structure in Chapter 3, 3.1.3.4, is met.

Note 2.— Bends or other irregularities that are not acceptable will normally be ascertained by flight tests in stable air conditions requiring precision flight check techniques.

2.1.4 *ILS glide path bends.* Bends should be evaluated in terms of the ILS glide path structure specified in Chapter 3, 3.1.5.4. With regard to Facility Performance Category I, this glide path structure is based on the desire to restrict aircraft deviations due to glide path bends (95 per cent probability basis) at the 30 m (100 ft) height, to vertical displacements of less than 3 m (10 ft). With regard to Facility Performance Categories II and III, this glide path structure is based on the desire to restrict aircraft deviations due to path bends (95 per cent probability basis) at the 15 m (50 ft) height, to less than 2 degrees of roll and pitch attitude and to vertical displacements of less than 1.2 m (4 ft).

Note 1.— Path bends are unacceptable when they preclude an aircraft under normal conditions from reaching the decision height in a stable attitude and at a position, within acceptable limits of displacement from the ILS glide path, from which a safe landing can be effected. Automatic and semi-automatic coupling is affected to a greater degree than manual coupling by the presence of bends. Additionally, when automatic coupling is used, there may be an operational requirement to continue the approach below the decision height. Aircraft guidance can be satisfied if the specification for ILS glide path structure in Chapter 3, 3.1.5.4, is met.

Note 2.— Bends or other irregularities that are not acceptable will normally be ascertained by precision flight tests, supplemented as necessary by special ground measurements.

2.1.5 *Application of localizer course/glide path bend amplitude Standard.* In applying the specification for localizer course structure (Chapter 3, 3.1.3.4) and ILS glide path structure (Chapter 3, 3.1.5.4), the following criteria should be employed:

— Figure C-1 shows the relationship between the maximum (95 per cent probability) localizer course/glide path bend amplitudes and distances from the runway threshold that have been specified for Facility Performance Categories I, II and III ILS.

— If the bend amplitudes are to be evaluated in any region of the approach, the flight recordings, corrected for aircraft angular position error, should be analysed for a time interval of plus or minus 20 seconds about the midpoint of the region to be evaluated. The foregoing is based on an aircraft ground speed of 195 km/h (105 knots) plus or minus 9 km/h (5 knots).

The 95 per cent maximum amplitude specification is the allowable percentage of total time interval in which the course/path bend amplitude must be less than the amount specified in Figure C-1 for the region being evaluated. Figure C-2 presents a typical example of the method that can be employed to evaluate the course/path bend amplitude at a particular facility. If the sum of the time intervals t_1, t_2, t_3, where the given specification is exceeded, is equal to or less than 5 per cent of the total time T, the region that is being evaluated is acceptable. Therefore:

$$100 \quad \frac{T - [(t_1 + t_2 + ...)]}{T} \geq 95\%$$

Analysis of ILS glide path bends should be made using as a datum the mean glide path and not the downward extended straight line. The extent of curvature is governed by the offset displacement of the ground equipment glide path antenna system, the distance of this antenna system from the threshold, and the relative heights of the ground along the final approach route and at the glide path site (see 2.4).

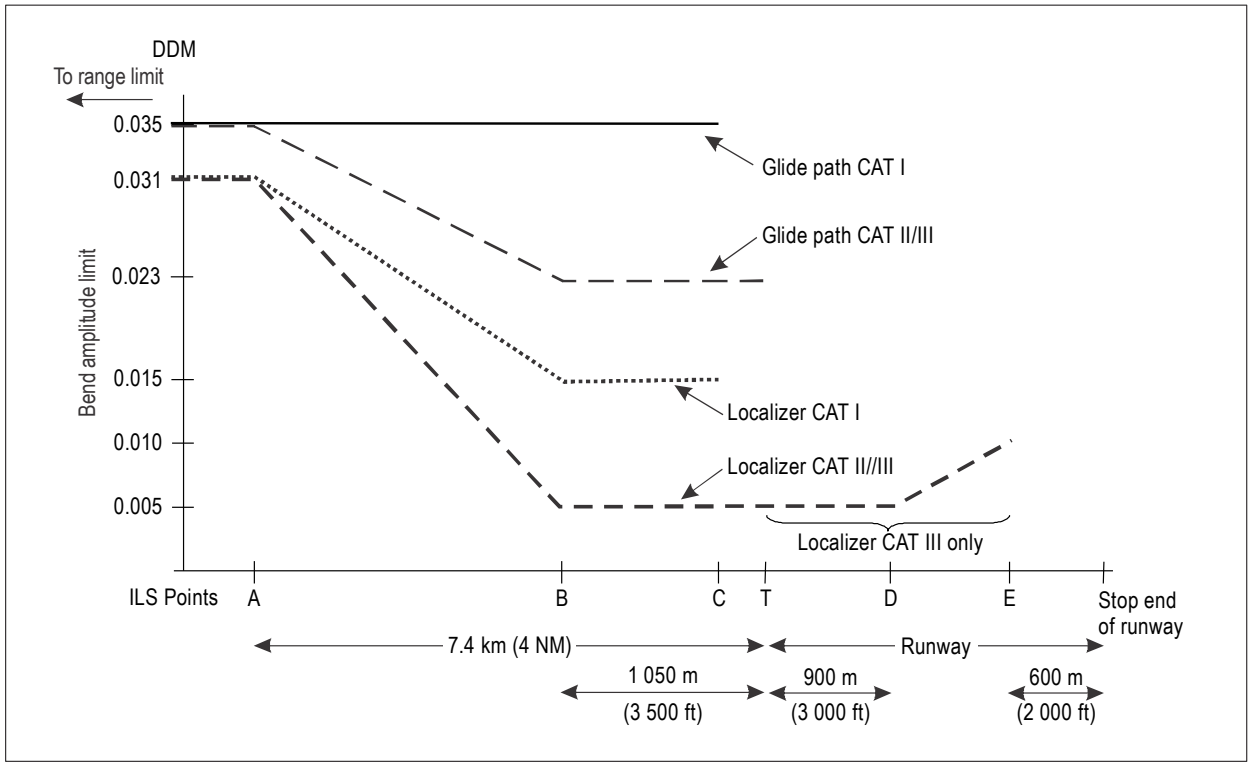

Figure C-1. Localizer course and glide path bend amplitude limits

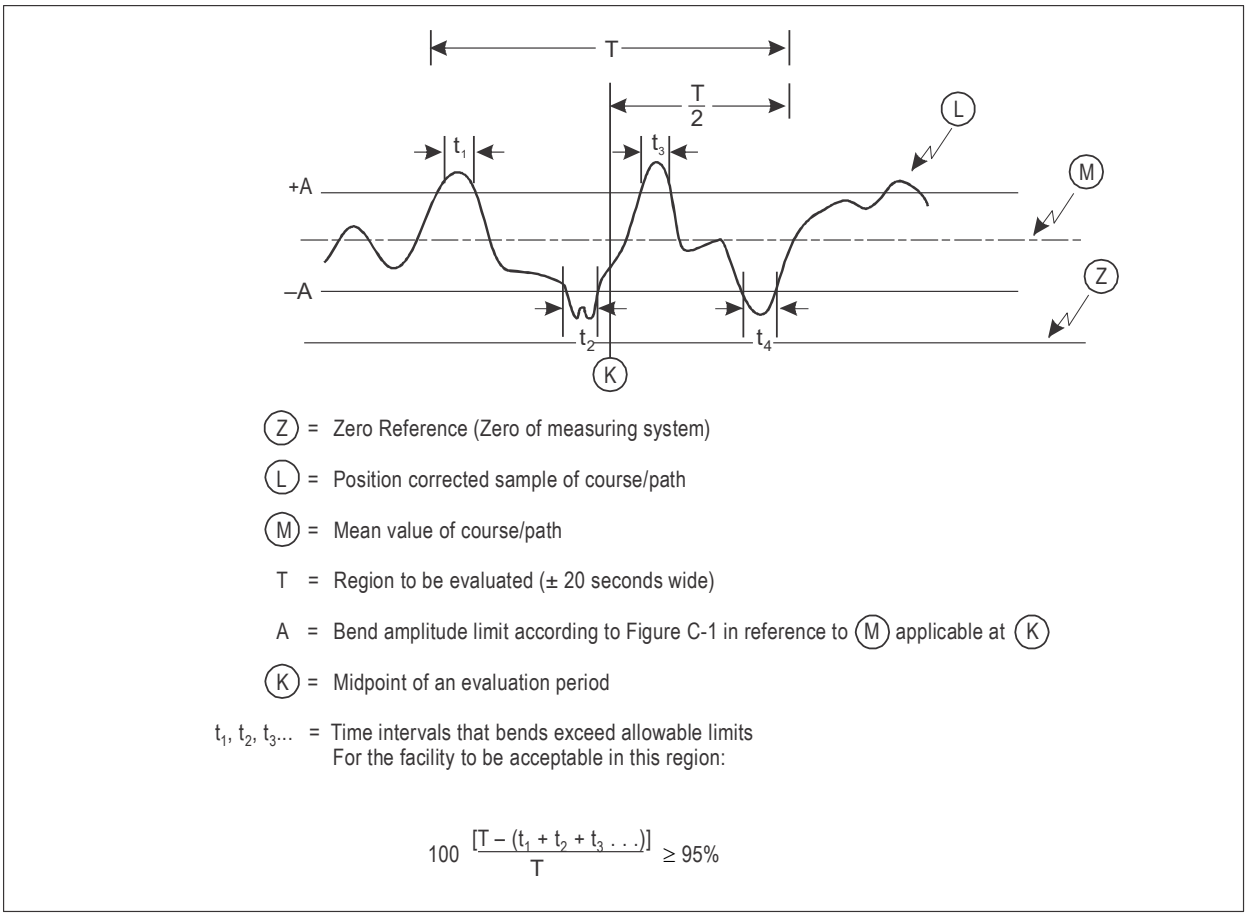

Figure C-2. Evaluation of course/path bend amplitude

2.1.6 *Measurements filter.* Owing to the complex frequency components present in the ILS beam bend structures, measured values of beam bends are dependent on the frequency response of the airborne receiving and recording equipment. It is intended that beam bend measurements be obtained by using a low-pass filter corner frequency (radians per second) for the receiver DDM output circuits and associated recording equipment of $V/92.6$, where V is the velocity in km/h of the aircraft or ground vehicle as appropriate.

2.1.7 *Monitor systems.* Available evidence indicates that performance stability within the limits defined in Chapter 3, 3.1.3.6, 3.1.3.7 and 3.1.5.6, i.e. well within the monitor limit, can readily be achieved.

2.1.7.1 The choice of monitor limits is based on judgement, backed by knowledge of the safety requirements for the category of operation. However, the specifications of such monitoring limits do not indicate the magnitude of the normal day-to-day variations in performance which result from setting-up errors and equipment drift. It is necessary to investigate and take corrective action if the day-to-day performance frequently drifts beyond the limits specified in Chapter 3, 3.1.3.6, 3.1.3.7 and 3.1.5.6. The causes of such drifts should be eliminated:

a) to reduce greatly the possibility of critical signal parameters hovering near the specified monitor limits;

b) to ensure a high continuity of ILS service.

2.1.7.2 Following are some general guidelines for the design, operation and maintenance of monitor systems to meet the requirements in Chapter 3, 3.1.3.11 and 3.1.5.7.

1) Great care should be exercised to ensure that monitor systems respond to all those variations of the ground facility which adversely affect the operation of the airborne system during ILS approach.

2) Monitor systems should not react to local conditions which do not affect the navigational information as seen by airborne systems.

3) Drifts of the monitor system equipment should not appreciably reduce or increase the monitoring limits specified.

4) Special care must be taken in the design and operation of the monitor system with the aim of ensuring that the navigational components will be removed or radiation cease in the event of a failure of the monitor system itself.

5) Some monitors rely on devices which sample the signal in the vicinity of the transmitter antenna system. Experience has shown that such monitor systems require special attention in the following aspects:

   a) where large-aperture antenna systems are used, it is often not possible to place the monitor sensors in such a position that the phase relationship observed in the far field on the course exists at the sensing point. Nevertheless, the monitor system should also detect antenna and associated feeder system changes which significantly affect the course in the far field;

   b) changes in effective ground level caused by snow, flooding, etc., may affect glide path monitor systems, and the actual course in space differently, particularly when reliance is placed on the ground plane to form the desired glide path pattern;

   c) attention should be paid to other causes which may disturb the monitor sensing of the radiated signal, such as icing and birds;

   d) in a system where monitoring signals are used in a feedback loop to correct variations of the corresponding equipment, special care should be taken that extraneous influence and changes in the monitor system itself do not cause course or ILS glide path variations outside the specified limits without alarming the monitor.

6) One possible form of monitor is an integral monitor in which the contribution of each transmitting antenna element to the far-field course signal is measured at the antenna system. Experience has shown that such monitoring systems, properly designed, can give a close correlation between the monitor indication and the radiated signal in the far field. This type of monitor, in certain circumstances, overcomes the problem outlined in 5) a), b) and c).

2.1.7.3 It will be realized that the DDM measured at any one point in space is a function of displacement sensitivity and the position of the course line or ILS glide path. This should be taken into account in the design and operation of monitor systems.

2.1.8 *Radiation by ILS localizers not in operational use.* Severe interference with operational ILS localizer signals has been experienced in aircraft carrying out approaches to low levels at runways equipped with localizer facilities serving the reciprocal direction to the approach. Interference in aircraft overflying this localizer antenna system is caused by cross modulation due to signals radiated from the reciprocal approach localizer. Such interference, in the case of low level operations, could seriously affect approach or landing, and may prejudice safety. Chapter 3, 3.1.2.7 and 3.1.2.7.1 specify the conditions under which radiation by localizers not in operational use may be permitted.

2.1.8.1 At those locations where an ILS facility and a GBAS facility serve opposite approach directions to the same runway, there is a possibility of interference to the reception of the GBAS VDB signals in the region where the aircraft overflies the localizer. Localizer signals that do not support compliance with the requirements in Appendix B, 3.6.8.2.2.5 and 3.6.8.2.2.6 defining the desired to undesired signal ratios and the maximum adjacent channel power tolerable by the GBAS VDB receiver, can result in excessive missed messages and cause a loss of continuity of GBAS guidance. The interference is likely to be higher when the localizer is sited close to the runway threshold. Chapter 3, 3.1.2.8 specifies the conditions under which radiation by localizers not in operational use should not be allowed. Additional information is contained in Attachment D, 7.2.3.3.

2.1.9 *ILS multipath interference*

Note 1.— This guidance material reflects how new larger aeroplanes (NLA) may impact the size of the ILS critical and sensitive areas. It also documents established engineering practices for determining critical and sensitive area dimensions, outlines the associated operational trade-offs, and presents indicative examples of the resulting sizes of the areas. In practice, however, the size of critical and sensitive areas at an aerodrome may need to be determined by specific assessments at that aerodrome.

Note 2.— This guidance material is not intended to create a need to review established critical and sensitive area dimensions which have been demonstrated to be satisfactory at a particular aerodrome, unless the operational environment has evolved significantly (such as through the introduction of NLA operations at the aerodrome or the construction of new buildings) or the ILS installation has been changed in a way that may affect the dimensions of the areas.

2.1.9.1 *ILS environmental effects.* Large reflecting objects within the ILS coverage volume, whether fixed objects or vehicles, including aircraft, can potentially cause degradation of the signal-in-space, through signal blockage and/or multipath interference, with the consequence that the signal-in-space tolerances defined in Chapter 3, 3.1 may be exceeded. The amount of degradation is a function of the location, size and orientation of the reflecting surfaces, and of the ILS antenna characteristics. The objective of identifying critical and sensitive areas (see 2.1.9.2) and associated management procedures is to prevent such degradation and ensure that aircraft using the ILS can rely on the signal-in-space meeting the requirements of Chapter 3, 3.1.

2.1.9.2 *ILS critical and sensitive areas.* States differ in the way they choose to identify ILS protection areas. Practices also differ in how vehicle movement restrictions are managed. One method is to identify critical areas and sensitive areas as follows:

a) the ILS critical area is an area of defined dimensions about the localizer and glide path antennas where vehicles, including aircraft, are excluded during all ILS operations. The critical area is protected because the presence of vehicles and/or aircraft inside its boundaries will cause unacceptable disturbance to the ILS signal-in-space;

b) the ILS sensitive area is an area where the parking and/or movement of vehicles, including aircraft, is controlled to prevent the possibility of unacceptable interference to the ILS signal during ILS operations. The sensitive area is protected against interference caused by large moving objects outside the critical area but still normally within the airfield boundary.

Note 1.— In some States, the term "critical area" is used to describe an area that combines the critical and sensitive areas identified in this guidance material. In cases where the critical area overlaps operational areas, specific operational management procedures are required to ensure protection of aircraft using the ILS for intercept and final approach guidance.

Note 2.— It is expected that at sites, where ILS and MLS are to be collocated, the MLS might be located within ILS critical areas in accordance with guidance material in Attachment G, 4.1.

2.1.9.3 *Technical and operational logic associated with critical and sensitive areas*. Ideally, the critical area is enforced during all ILS operations with protection afforded down to at least the Category I decision height. A critical area disturbance would normally impact all aircraft using the ILS signal at a given time (entire approach). The critical area is typically safeguarded through marked boundaries, limiting access to the area or through procedural means if there are overlaps into operational areas. From an operational perspective, the sensitive area would ideally protect aircraft operations at least from the Category I decision height down to the runway, and be activated during low visibility conditions only (e.g. Category II and III). A sensitive area disturbance would normally be of a transient nature, and produce a local disturbance affecting a single aircraft only. However, at many locations, it may not be possible to achieve this ideal situation, and corresponding technical and operational mitigations will be required.

*Note.— Guidance on operational procedures for the protection of critical and sensitive areas is provided in ICAO EUR DOC 013, "*European Guidance Material on All Weather Operations at Aerodromes*".*

2.1.9.4 *Technical determination of critical and sensitive area dimensions*. Critical and sensitive areas are normally calculated in the planning stage, prior to ILS installation, using computer simulation. A similar process is used when there are changes to the installation or to the environment. When using computer simulations, it is necessary to allocate the protection of individual parts of the approach to either the critical or sensitive area. It is desirable to ensure that the combined critical and sensitive areas protect the entire approach. However, this may not be possible in all cases. Furthermore, if the logic described in 2.1.9.3 is used, this may lead to restrictively large critical areas. Some States have found that a reasonable compromise can be achieved using a different logic, whereby the critical area protects the segment from the edge of coverage down to 2 NM from the runway threshold, while the sensitive area protects the approach from 2 NM down to the runway. In this case, a sensitive area for Category I operations will exist and may require operational mitigation. Depending on the operational environment (such as timing between leading aircraft on runway roll-out and trailing aircraft on final approach), no particular measures may be needed. There may not necessarily be a direct link between the approach allocation used in simulations to determine critical and sensitive areas, and their operational management. It is a State's responsibility to define the relevant areas. If different disturbance acceptance criteria or different flight segment protections are to be applied, they must be validated through a safety analysis. The safety analysis must take all relevant factors into account, including the aerodrome configuration, traffic density and any operational issues or capacity restrictions.

2.1.9.5 *Factors impacting the sizes of critical and sensitive areas*. Localizer and glide path antennas with optimized radiation patterns, especially when combined with two-frequency transmitters, can be very effective in reducing the potential for signal disturbance and hence the sizes of the critical and sensitive areas. Other factors affecting the sizes of the areas include the category of approach and landing operation to be supported, the amount of static disturbance, locations, sizes and orientations of aircraft and other vehicles (particularly of their vertical surfaces), runway and taxiway layout, and antenna locations. In particular, the maximum heights of vertical aircraft tail surfaces likely to be encountered must be established, together with all possible orientations at a given location, which may include non-parallel or non-perpendicular orientations with respect to the runway. While critical and sensitive areas are evaluated in a two-dimensional (horizontal) context, protection should actually be extended to volumes, as departing aircraft and/or manoeuvring helicopters/aircraft can also cause disturbances to the ILS signals. The vertical profiles of the protection volumes depend on the vertical patterns of the transmitting arrays.

2.1.9.6 *Allocation of multipath error budget*. It is convenient to consider disturbances caused by mobile objects such as aircraft and other vehicles separately from the static disturbances caused by fixed objects such as buildings and terrain. Once the static multipath is known, the remainder can be allocated to dynamic disturbances. If measurements indicate that the real static multipath is significantly different from that assumed in the simulations, the allocation may need to be revised. In most cases, the root sum square combination of the disturbances due to fixed and mobile objects gives a more statistically valid representation of the total disturbance than an algebraic sum. For example, a limit of plus or minus 5μA for localizer course structure would be respected with plus or minus 3μA of disturbance due to static objects and an allowance of plus or minus 4μA for dynamic objects:

$$\sqrt{(3\mu A)^2 + (4\mu A)^2} = 5\mu\text{A}$$

2.1.9.7 *Site study and computer simulations.* Normally, a site specific study is conducted for a particular airport installation. The study will take into account different assumptions for the static multipath environment, airport topography, types and effective heights of ILS arrays, and orientations of manoeuvring aircraft, such as runway crossings, 180° turns at threshold or holding orientations other than parallel or perpendicular. Simulation models can be employed to calculate the probable location, magnitude and duration of ILS disturbances caused by objects, whether by structures or by aircraft of various sizes and orientation at different locations. Air navigation service providers (ANSPs) will need to ensure that simulation models used have been validated by direct comparison with ground and flight measurements for a variety of specific situations and environments, and that the subsequent application of such models is conducted by personnel with appropriate engineering knowledge and judgement to take into account the assumptions and limitations of applying such models to specific multipath environments.

2.1.9.8 *Changes in airport environment*. Should major changes in the airport environment cause an increase in the static disturbances of the localizer and/or glide path, the sizes of the critical and sensitive areas may need to be redefined, with potential impact on airport efficiency or capacity. This is particularly significant when considering the location, size and orientation of proposed new buildings within or outside the airport boundary. It is recommended that suitable safeguarding criteria be employed to protect the ILS operations.

*Note.— Example guidance can be found in ICAO EUR DOC 015 "*European Guidance Material on Managing Building Restricted Areas*".*

2.1.9.9 *Typical examples of critical and sensitive areas.* Figures C-3 and C-4 (including associated Tables C-1, C-2A and C-2B) show examples of critical and sensitive areas for the different categories of operations and for different classes of vehicle/aircraft heights and several localizer and glide path antenna types. The calculation of these examples has been done with a simulation model using an exact method of resolution of ILS propagation equations applied to a 3D model of corresponding aircraft. The dimensions are based on assumptions of flat terrain, 3.0° glide path, allocations of 60 per cent of applicable tolerances for static multipath and 80 per cent for dynamic multipath, an approaching aircraft at 105 knots, i.e. with a 2.1 rad/s low-pass filter and an omnidirectional receiving antenna pattern. The examples consider typical orientations of reflecting surfaces of taxiing, holding and manoeuvring aircraft/large ground vehicles. The tail heights for the ground vehicles/small aircraft, medium, large and very large aircraft categories correspond to Annex 14 aerodrome reference code letters A, B/C, D/E and F, respectively, as detailed within FAA Advisory Circular 150/5300-13. In case of uncertainty about which category an aircraft belongs to for the purposes of critical and sensitive areas assessment, the tail height is the determining feature.

2.1.9.9.1 *Purpose and correct application of typical examples*. Since it will be rare that an actual installation fits exactly the assumptions used in these examples, adaptation to local conditions will be required. The examples serve to provide a rough order of magnitude indication of critical and sensitive area sizes, depending on how much local conditions differ from assumptions used in these examples. The example tables may also be used to assess the tools used in simulations, using the listed assumptions. In many installations, airports have established critical and sensitive areas which are different from those listed in these examples, through a combination of further technical optimizations, operational mitigations, experience, and safety assessments applicable to the particular operational environment. In the case of new airport construction projects, potential conflicts of the example areas provided here with planned operational uses should lead to further evaluations, and may lead to implementing more advanced ILS antenna systems, for example wider aperture localizer antennas, including advanced designs such as very large aperture arrays. The typical examples provided here do not take such specific optimized systems into account. The tables differ slightly between the localizer and the glide path in terms of how different aircraft orientations are considered. These details are explained in the notes to Tables C-1 (note 9), C-2A and C-2B (note 8). In accordance with these notes, in some glide path cases the half-wingspan of aircraft needs to be added to ensure that no portion of the aircraft enters the critical or sensitive areas.

2.1.9.9.2 *Limits of multipath assumptions used in example simulations.* The allocation of 60 per cent for static and 80 per cent for dynamic multipath used in 2.1.9.6 represents a conservative approach which is suitable in locations where both types of multipath coincide. A different allocation may be appropriate for the glide path, especially in the case of flat terrain, as in that case the static multipath will be very small. In locations where static and dynamic multipath do not coincide, due to the specific layout of the airport, the full tolerance can be consumed by the dynamic multipath. A simulation tool able to model the complete environment (static and dynamic reflection sources) and to compute the combined effect may avoid having to apply the root sum square approximation. This may lead to an optimization of the critical and/or sensitive area dimensions.

2.1.9.9.3 *Flight segment protection allocations used in example simulations.* The examples given in Figure C-3 for the localizer use a 2 NM transition point as described in 2.1.9.4. The examples given in Figure C-4 for the glide path use a 0.6 NM transition point (corresponding to the Category I decision height). Depending on local operations, other transition points may be more suitable.

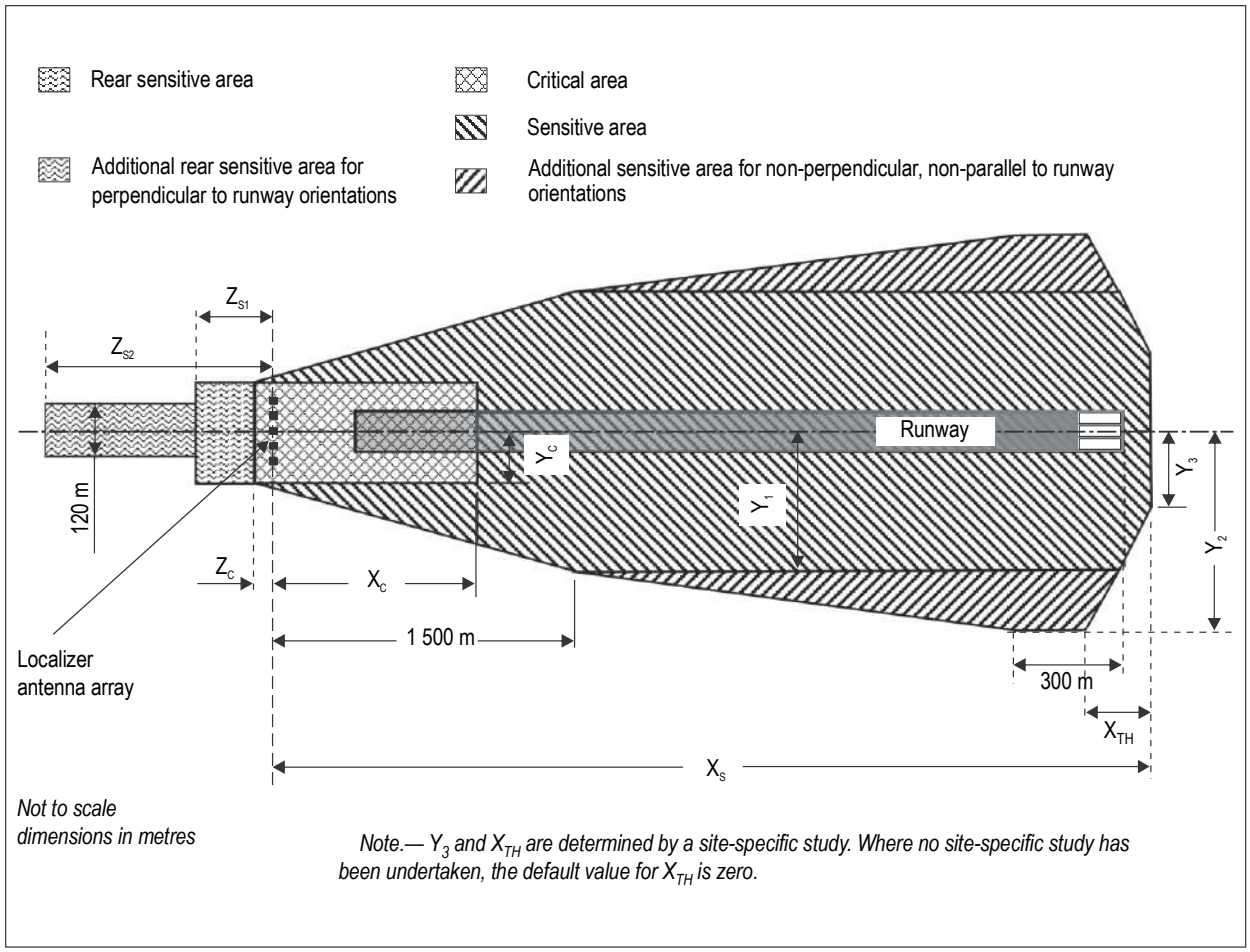

Figure C-3. Example of localizer critical and sensitive area dimensions (values in associated Table C-1 below)

Table C-1. Typical localizer critical and sensitive area sizes

Aircraft/vehicle height	H ≤ 6 m (see Note 1) Ground vehicle			6 m < H ≤ 14 m Medium aircraft			14 m < H ≤ 20 m Large aircraft		20 m < H ≤ 25 m Very large aircraft	
Antenna aperture (see Note 3)	Small	Medium	Large	Small	Medium	Large	Medium	Large	Medium	Large
Critical area CAT I X_C	180 m	65 m	45 m	360 m	200 m	150 m	500 m	410 m	660 m	580 m
Z_C	10 m	10 m	10 m	35 m	35 m	35 m	50 m	50 m	60 m	60 m
(see Note 10) Y_C	50 m	15 m	20 m	110 m	25 m	25 m	50 m	30 m	55 m	40 m
Sensitive area CAT I X_S	200 m	No sensitive area		500 m	No sensitive area		No sensitive area		1 300 m	1 100 m
Y_1	40 m			90 m					90 m	50 m
Y_2	40 m			90 m					90 m	50 m
Z_{S1}	15 m			35 m					60 m	60 m
(see Note 7) Z_{S2}	15 m			35 m					60 m	60 m

Aircraft/vehicle height	H ≤ 6 m (see Note 1) Ground vehicle		6 m < H ≤ 14 m Medium aircraft		14 m < H ≤ 20 m Large aircraft		20 m < H ≤ 25 m Very large aircraft	
Antenna aperture (see Note 3)	Medium	Large	Medium	Large	Medium	Large	Medium	Large
Critical area CAT II X_C	75 m	55 m	200 m	200 m	500 m	475 m	750 m	675 m
Z_C	10 m	10 m	35 m	35 m	50 m	50 m	60 m	60 m
(see Note 10) Y_C	15 m	20 m	25 m	25 m	50 m	30 m	70 m	50 m
Sensitive area CAT II X_S	75 m	No sensitive area	500 m	No sensitive area	2 100 m	1 400 m	Localizer to threshold distance	Localizer to threshold distance
Y_1	15 m		50 m		125 m × K	60 m × K	180 m × K	100 m × K
Y_2	15 m		50 m		125 m × K	60 m × K	180 m × K	125 m × K
Z_{S1}	15 m	15 m	35 m	35 m	60 m	60 m	70 m	70 m
(see Note 7) Z_{S2}	15 m	15 m	45 m	45 m	160 m	160 m	250 m	250 m

Aircraft/vehicle height	H ≤ 6 m (see Note 1) Ground vehicle		6 m < H ≤ 14 m Medium aircraft		14 m < H ≤ 20 m Large aircraft		20 m < H ≤ 25 m Very large aircraft	
Antenna aperture (see Note 3)	Medium	Large	Medium	Large	Medium	Large	Medium	Large
Critical area CAT III X_C	75 m	55 m	200 m	200 m	500 m	475 m	750 m	675 m
Z_C	10 m	10 m	35 m	35 m	50 m	50 m	60 m	60 m
(see Note 10) Y_C	15 m	20 m	25 m	25 m	50 m	30 m	70 m	50 m
Sensitive area CAT III X_S	100 m	No sensitive area	900 m	No sensitive area	3 100 m	3 100 m	Localizer to Threshold distance	Localizer to Threshold distance
Y_1	15 m		50 m		140 m × K	120 m × K	180 m × K	150 m × K
Y_2	15 m		50 m		160 m × K	120 m × K	260 m × K	180 m × K
Z_{S1}	15 m	15 m	35 m	35 m	60 m	60 m	70 m	70 m
(see Note 7) Z_{S2}	15 m	15 m	45 m	45 m	160 m	160 m	250 m	250 m

Notes:

1. For vehicles smaller than 2.5 m in height, Z_C = 3 m, assuming a 23 dB front/back ratio for the transmitting antenna for both course and clearance signals.

2. For systems with near-field monitor antennas, vehicles must not enter between the monitor antennas and the transmitting antenna.

3. Small aperture: 11 elements or less. Medium aperture: 12 to 15 elements. Large aperture: 16 elements or more. Simulations have been conducted using a commonly installed 12 element system for the medium and a commonly installed 20 element system for the large aperture cases. It is assumed that Category II/III operations are not conducted on runways equipped with small aperture localizers, and that aircraft as large as a 747 are not operating on such runways.

4. For localizer arrays with very low height, additional critical area will be needed due to the greater attenuation of the direct signal at low vertical angles.

5. A specific study for a particular airport, considering realistic orientations, static multipath environment, and airport topography and type of ILS antennas, may define different critical areas.

6 $K = \sqrt{\frac{\text{localizer to threshold distance}}{3\,300\text{ m}}}$

7. The rear dimensions for sensitive areas may be changed based on specific study results considering fielded antenna pattern characteristics. A directional array with a 23 dB front/back ratio is assumed for course and clearance signals.

8. Single aircraft taxiing or holding parallel to the runway does not generate out-of-tolerance signals.

9. Boundaries for critical areas or rear sensitive areas apply to the entire longitudinal axis (both tail and fuselage) of the interfering aircraft. Boundaries for sensitive areas apply only to the tail of the interfering aircraft.

10. The critical area semi-width, Y_c, should exceed the actual physical dimension of the localizer antenna array by at least 10 m laterally (on both sides) in its portion between the localizer antenna array and the stop end of the runway.

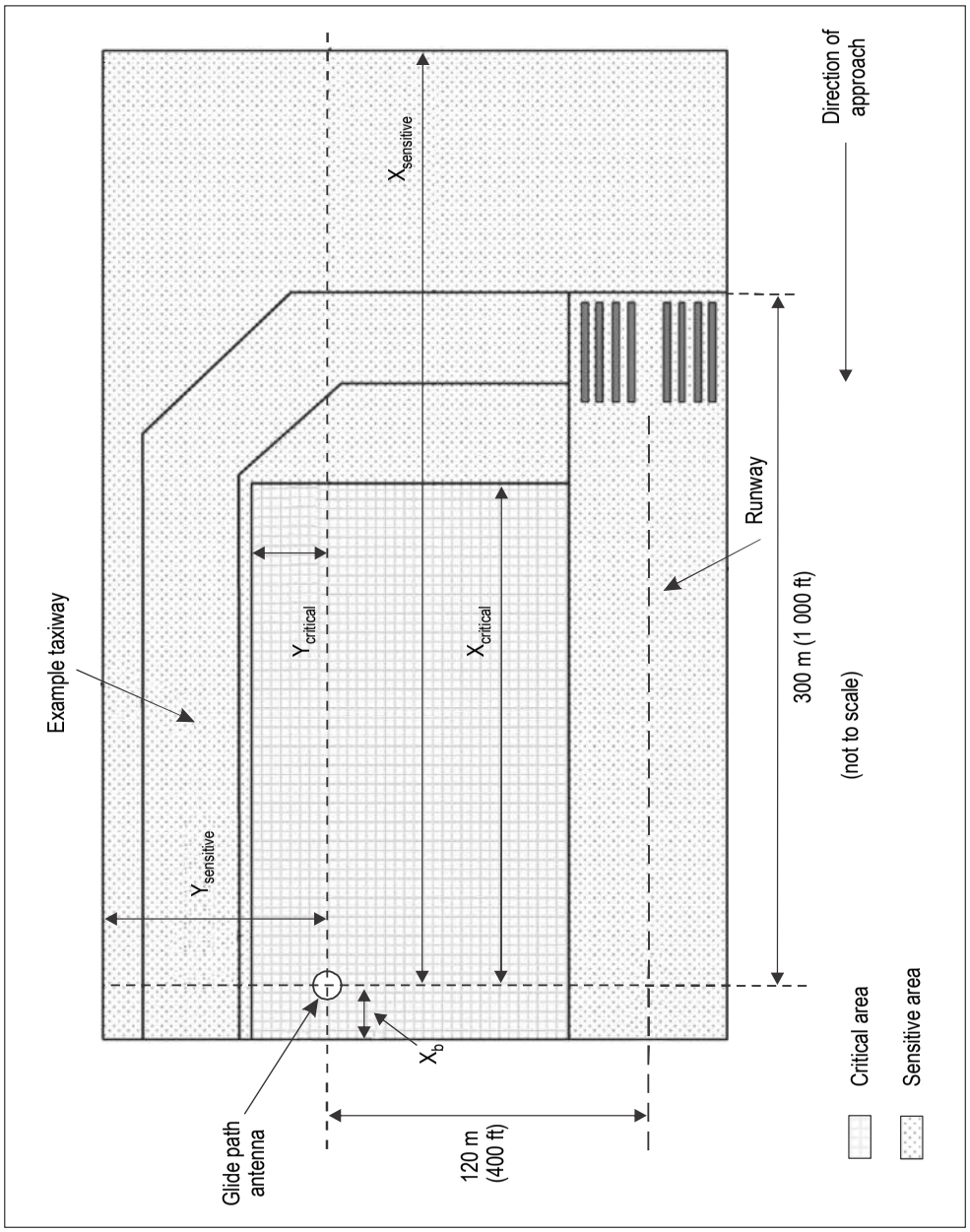

Figure C-4. Example of glide path critical and sensitive area dimensions (values in associated Table C-2A below)

Table C-2A. Example of glide path critical and sensitive area dimensions for parallel and perpendicular orientations

Aircraft/vehicle height	Ground vehicle		Medium aircraft		Large aircraft		Very large aircraft	
	H ≤ 6 m		6 m < H ≤ 14 m		14 m < H ≤ 20 m		20 m < H ≤ 25 m	
Glide path type	M-array	Null-ref	M-array	Null-ref	M-array	Null-ref	M-array	Null-ref
CAT I critical area								
X	299 m	191 m	329 m	829 m	467 m	1 117 m	610 m	1 360 m
Y	29 m	29 m	20 m	20 m	22 m	22 m	15 m	15 m
CAT I sensitive area								
X	299 m	399 m	279 m	529 m	417 m	717 m	510 m	760 m
Y	29 m	15 m	20 m	20 m	22 m	16 m	15 m	15 m
CAT II/III critical area								
X	299 m	449 m	329 m	829 m	567 m	1 267 m	660 m	1 410 m
Y	29 m	29 m	20 m	20 m	22 m	22 m	15 m	15 m
CAT II/III sensitive area								
X	299 m	449 m	429 m	629 m	517 m	767 m	560 m	1 010 m
Y	29 m	29 m	20 m	20 m	22 m	22 m	15 m	15 m

Table C-2B. Example of glide path critical and sensitive area dimensions for other orientations

Aircraft/vehicle height	Ground vehicle		Medium aircraft		Large aircraft		Very large aircraft	
	H ≤ 6 m		6 m < H ≤ 14 m		14 m < H ≤ 20 m		20 m < H ≤ 25 m	
Glide path type	M-array	Null-ref	M-array	Null-ref	M-array	Null-ref	M-array	Null-ref
CAT I critical area								
X	298 m	191 m	297 m	829 m	444 m	**1 167 m**	591 m	1 360 m
Y	24 m	15 m	**39 m**	**39 m**	**35 m**	**55 m**	**34 m**	**55 m**
CAT I sensitive area								
X	298 m	394 m	**297 m**	**537 m**	**444 m**	717 m	**541 m**	710 m
Y	24 m	**24 m**	**39 m**	**39 m**	**25 m**	**18 m**	**24 m**	**24 m**
CAT II/III critical area								
X	298 m	443 m	**347 m**	829 m	544 m	1 267 m	**672 m**	1 410 m
Y	24 m	25 m	**39 m**	**39 m**	**35 m**	**55 m**	**34 m**	**55 m**
CAT II/III sensitive area								
X	298 m	445 m	297 m	**829 m**	**528 m**	**817 m**	**610 m**	1 010 m
Y	24 m	24 m	**39 m**	**39 m**	**25 m**	**25 m**	**24 m**	**24 m**

Notes:

1. X_b = 50 m and applies to both critical and sensitive areas for the large and very large aircraft category only. Otherwise, X_b = 0 m.

2. The ground vehicle category also applies to small aircraft. Simulations have approximated these aircraft or large ground vehicles using a rectangular box (4 m high x 12 m long x 3 m wide). Depending on local conditions, it may be possible to reduce especially Category I critical area dimensions such that taxiing or driving on the taxiway directly in front of the glide path antenna may be allowed.

3. Separate tables (C-2A and C-2B) are given for parallel/perpendicular and for other orientations in order to not penalize parallel taxiway operations. To derive worst-case keep-out areas, the largest number among the two tables must be used. Values in Table C-2B ("other orientations") that are larger than the corresponding ones in Table C-2A ("parallel and perpendicular orientations") are highlighted in bold. Perpendicular orientations covered in Table C-2A include only the orientation where the nose of the aircraft is pointing towards the runway. Perpendicular orientations with the tail of the aircraft pointing towards the runway are covered in Table C-2B. Table C-2B also considers aircraft turning towards the runway for line-up at angles of 15, 30, 45, 60 and 75 degrees. Orientations causing the largest keep-out areas (i.e. worst aircraft orientation among all orientations causing out-of-tolerance signals) have been derived based on an A380 using an M-array antenna. Since the number of simulations required to cover all possible orientations for all categories of vehicles over a large area would be excessive, the impact of worst-case orientations on the critical and sensitive areas may need to be verified taking into account the particular taxiway layout.

4. Simulations are referenced to the glide path antenna mast using a typical perpendicular distance to the runway centre line of 120 m and a nominal parallel distance from the runway threshold of 300 m. For different antenna-to-runway offsets, the critical and sensitive areas have to be shifted accordingly.

5. The edge of the runway closer to the glide path antenna defines the inner limit of the critical area. The farther edge of the runway defines the inner limit of the sensitive area. This sensitive area limit needs to be extended by another 50 m on the opposite side of the runway (starting from the runway centre line) for the large and very large aircraft categories when using a Null-Ref antenna.

6. Depending on simulation choices (transition point), the critical area may be larger than the sensitive area and impact associated management procedures.

7. In line with the operational logic described in 2.1.9.4 (no protection of the Category I glide path is required below decision height) as well as the observation that in Tables C-1, C-2A and C-2B, the Category I critical area is typically equal or larger than the sensitive area, protecting the Category I sensitive area may not be necessary.

8. Boundaries for critical and sensitive areas apply to the entire aircraft (entire fuselage and wings).

2.1.10 *Reducing localizer bends and areas with insufficient difference in depth of modulation (DDM)*

2.1.10.1 *Introduction.* Owing to site effects at certain locations, it is not always possible to produce, with simple standard ILS installations, localizer courses that are sufficiently free from troublesome bends or irregularities. If this is the case, it is highly preferable to use two radio frequency carriers to provide the standard coverage and signal characteristics. Additional guidance on two radio frequency carrier coverage is provided in 2.7. If standard coverage requirements still cannot be met, reducing radiation in the direction of objects and accepting an increase of the lower vertical coverage boundaries as permitted in Chapter 3, 3.1.3.3.1 may be employed.

2.1.10.2 *Reducing standard localizer coverage.* When using the coverage reduction option defined in Chapter 3, 3.1.3.3.1, care needs to be taken to ensure that the reduced coverage volume is consistent with the minimum altitudes published for the instrument approach procedure. Additionally, normal vectoring operations should not be terminated and a clearance to intercept the localizer should not be issued until within the promulgated coverage area. This is sometimes referred to as the operational service volume.

2.1.10.2.1 *Operational considerations from an air traffic management perspective.* Instrument approach procedures must be designed to take into account any reduction in localizer coverage permitted by the Standard in Chapter 3, 3.1.3.3.1. This can be done either by ensuring that the procedure remains within localizer coverage or by providing alternative means to navigate. Consequently, a significant portion (3.7 km (2 NM) minimum) of the initial segment must be within localizer coverage. Localizer coverage needs to be available sufficiently in advance of the area where controllers usually give the approach or intercept clearance to permit pilots to verify the Morse code identification (IDENT).

2.1.10.2.2 *Operational considerations from a pilot/aircraft perspective.* For aircraft equipped with automatic flight control systems (AFCS), localizer coverage needs to be available prior to the activation of the AFCS intercept mode (manual or automatic flight) and sufficiently in advance of the area where controllers usually give the approach or intercept clearance to permit checking the IDENT signal. When flying manually or when using an AFCS, pilots normally check the IDENT of the ILS facility and then wait to arm the mode enabling localizer intercept turn initiation and capture until after receiving the approach or intercept clearance. Ideally, additional aids (if included in the approach procedure) should permit a determination of the relationship between the aircraft position and the localizer front course line by the pilot.

2.2 ILS airborne receiving equipment

2.2.1 To ensure that the required operational objectives are achieved, it is necessary for the airborne receiving equipment to meet defined performance standards.

Note.— The relevant minimum operational performance standards for ILS receivers are detailed in RTCA DO-195 (1986) and EUROCAE ED-46B (including Amendments Nos. 1 and 2) for the localizer, in RTCA DO-143 (1970) and EUROCAE 1/WG 7/70 for the marker beacon, and in RTCA DO-192 (1986) and EUROCAE ED-47B (including Amendment No. 1) for the glide path receivers.

2.2.2 *Immunity performance of ILS localizer receiving systems to interference from VHF FM broadcast signals*

2.2.2.1 With reference to Note 2 of 3.1.4.2, Chapter 3, the immunity performance defined there must be measured against an agreed measure of degradation of the receiving system's normal performance, and in the presence of, and under standard conditions for the input wanted signal. This is necessary to ensure that the testing of receiving equipment on the bench can be performed to a repeatable set of conditions and results and to facilitate their subsequent approval. Tests have shown that FM interference signals may affect both course guidance and flag current, and their effects vary depending on the DDM of the wanted signal which is applied. Additional information can be found in ITU Recommendation ITU-R SM.1140, *Test procedures for measuring receiver characteristics used for determining compatibility between the sound-broadcasting service in the band of about 87–108 MHz and the aeronautical services in the band 108–118 MHz*.

2.2.2.2 Commonly agreed methodology and formulae should be used to assess potential incompatibilities to receivers meeting the general interference immunity criteria specified in Chapter 3, 3.1.4. The formulae provide clarification of immunity interference performance of spurious emission (type A1) interference, out-of-band channel (type A2) interference, two-signal and three-signal third order (type B1) interference, and overload/desensitization (type B2) interference. Additional information can be found in ITU Recommendation ITU-R SM.1009-1, *Compatibility between the sound-broadcasting service in the band of about 87–108 MHz and the aeronautical services in the band 108–137 MHz*.

2.2.3 *Localizer and glide path antenna polarization*

2.2.3.1 Over the localizer and glide path frequency bands, respectively, the reception of vertically polarized signals from the forward direction with respect to the localizer and glide path antenna should be at least 10 dB below the reception of horizontally polarized signals from the same direction.

2.3 Alarm conditions for ILS airborne equipment

2.3.1 Ideally, a receiver alarm system such as a visual flag should warn a pilot of any unacceptable malfunctioning conditions which might arise within either the ground or airborne equipments. The extent to which such an ideal may be satisfied is specified below.

2.3.2 The alarm system is actuated by the sum of two modulation depths and, therefore, the removal of the ILS course modulation components from the radiated carrier should result in the actuation of the alarm.

2.3.3 The alarm system should indicate to the pilot and to any other airborne system which may be utilizing the localizer and glide path data, the existence of any of the following conditions:

a) the absence of any RF signal as well as the absence of simultaneous 90 Hz and 150 Hz modulation;

b) the percentage modulation of either the 90 Hz or 150 Hz signal reduction to zero with the other maintained at its normal 20 per cent and 40 per cent modulation respectively for the localizer and glide path;

Note.— It is expected that the localizer alarm occur when either the 90 Hz or 150 Hz modulation is reduced to 10 per cent with the other maintained at its normal 20 per cent. It is expected that the glide path alarm occur when either the 90 Hz or 150 Hz modulation is reduced to 20 per cent with the other maintained at its normal 40 per cent.

2.3.3.1 The alarm indication should be easily discernible and visible under all normal flight deck conditions. If a flag is used, it should be as large as practicable commensurate with the display.

2.4 Guidance for the siting, elevation, adjustment and coverage of glide path equipment

2.4.1 *Lateral placement.* The lateral placement of the glide path antenna system with respect to the runway centre line is normally not less than 120 m (400 ft). In deciding the lateral placement of the glide path antenna, account should be taken of the appropriate provisions of Annex 14 with regard to obstacle clearance surfaces and objects on strips for runways.

2.4.2 *ILS glide path curvature.* In many cases, the ILS glide path is formed as a conic surface originating at the glide path aerial system. Owing to the lateral placement of the origin of this conic surface from the runway centre line, the locus of the glide path in the vertical plane along the runway centre line is a hyperbola. Curvature of the glide path occurs in the threshold region and progressively increases until touchdown. To limit the amount of curvature, the glide path antenna should not be located at an excessive lateral distance from the runway centre line.

2.4.3 *Procedure design.* Chapter 3, 3.1.5.1 provides Standards and Recommended Practices for the glide path angle and the height of the ILS reference datum. The longitudinal position of the glide path antenna with respect to the runway threshold is established in order to provide the selected glide path angle and desired ILS reference datum height for the precision approach procedure designed for that runway. The precision approach procedure design may be modified to meet obstacle clearance requirements or to account for technical siting constraints for the glide path antenna (for example, crossing runways or taxiways). The procedure designer will take into account the acceptable glide path angle, threshold crossing height and runway length available as they relate to the type of aircraft expected to use the precision approach procedure.

2.4.4 *Longitudinal placement.* Assuming that the reflecting surface in the beam forming area can be approximated by a planar surface with appropriate lateral and longitudinal slopes, the required longitudinal position of the glide path antenna is then a function of the ILS reference datum above the runway threshold and of the projection of the glide path reflection plane along the runway centre line . This situation is described pictorially in Figure C-5. In this figure, the line OP is defined by the intersection between the glide path reflection plane and the vertical plane along the runway centre line, and point O is at the same longitudinal distance from the threshold as the glide path antenna. Depending on the height and orientation of the reflection plane, point O may be above or below the runway surface.

For a planar reflecting surface, the longitudinal position of the glide path antenna is then calculated as follows:

$$D = \frac{H + Y}{\tan(\theta) + \tan(\alpha)}$$

where

D = the horizontal distance between O and P (equivalent to the longitudinal distance from the glide path antenna to the runway threshold);

H = the nominal height of the ILS reference datum above the runway threshold;

Y = the vertical height of the runway threshold above P';

θ = the nominal ILS glide path angle;

α = the longitudinal downslope of the glide path reflection plane.

Note.— In the above formula α *is to be taken as positive in the case of a downslope from the antenna towards the threshold.* Y *is taken as positive if the threshold is above the reflection plane intersection line.*

2.4.5 The foregoing guidance material is based on the approximation of the reflecting surface by an appropriately oriented plane. Actual siting characteristics, such as significant lateral slope or an irregular rather than planar reflection surface, may require a more rigorous approach if the design goal for the height of the ILS reference datum is to be closely met. In challenging cases, mathematical modelling predictions of the effects of the siting conditions may be appropriate.

2.4.6 Typically, the glide path has some irregularities. The mean ILS glide path angle can be ascertained only by flight tests; the mean observed position of that part of the glide path between ILS Points A and B being represented as a straight line, and the ILS glide path angle being the angle measured between that straight line and its vertical projection on the horizontal plane.

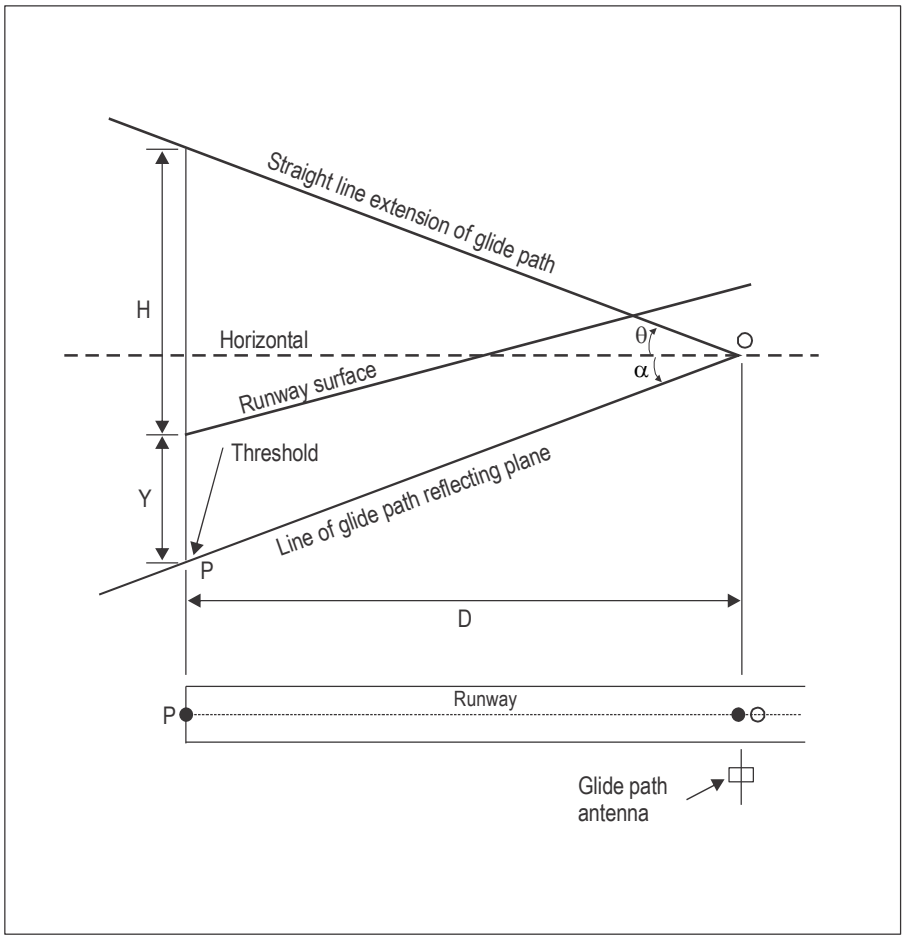

Figure C-5. Glide path siting for sloping runway

2.4.7 It is important to recognize that the effect of glide path irregularities if averaged within the region between the middle marker and the threshold will likely tend to project a reference datum which is actually different from the ILS reference datum. This reference datum, defined here as the achieved ILS reference datum, is considered to be of important operational significance. The achieved ILS reference datum can only be ascertained by flight check, i.e. the mean observed position of that portion of the glide path typically between points 1 830 m (6 000 ft) and 300 m (1 000 ft) from the threshold being represented as a straight line and extended to touchdown. The point at which this extended straight line meets the line drawn vertically through the threshold at the runway centre line is the achieved ILS reference datum.

Note.— Further guidance on the measurement of the glide path angle and the achieved ILS reference datum is given in Doc 8071.

2.4.8 To reduce multipath interference to Facility Performance Category III glide paths and to reduce siting requirements and sensitive areas at these sites, it is desirable that the signals forming the horizontal radiation pattern from the Facility Performance Category III — ILS glide path antenna system be reduced to as low a value as practicable outside the azimuth coverage limits specified in Chapter 3, 3.1.5.3. Another acceptable method is to rotate in azimuth the glide path antennas away from multipath sources thus reducing the amount of radiated signals at specific angles while still maintaining the azimuth coverage limits.

2.4.9 Chapter 3, 3.1.5.3.1 indicates the glide path coverage to be provided to allow satisfactory operation of a typical aircraft installation. The operational procedures promulgated for a facility must be compatible with the lower limit of this coverage. It is usual for descents to be made to the intercept altitude and for the approach to continue at this altitude until a fly-down signal is received. In certain circumstances a cross-check of position may not be available at this point. Automatic flight control systems will normally start the descent whenever a fly-up signal has decreased to less than about 10 microamperes.

2.4.10 The objective is, therefore, to provide a fly-up signal prior to intercepting the glide path. Although under normal conditions, approach procedures will be accomplished in such a way that glide path signals will not be used below 0.45 θ, or beyond 18.5 km (10 NM) from the runway, it is desirable that misleading guidance information should not be radiated in this area. Where procedures are such that the glide path guidance may be used below 0.45 θ, adequate precautions must be taken to guard against the radiation of misleading guidance information below 0.45 θ, under both normal conditions and during a malfunction, thus preventing the final descent being initiated at an incorrect point on the approach. Some precautions which can be employed to guard against the radiation of misleading guidance include the radiation of a supplementary clearance signal such as provided for in Chapter 3, 3.1.5.2.1, the provision of a separate clearance monitor and appropriate ground inspection and setting-up procedures.

2.4.11 To achieve satisfactory monitor protection against below-path out-of-tolerance DDM, depending on the antenna system used, the displacement sensitivity monitor as required in Chapter 3, 3.1.5.7.1 e) may not be adequate to serve also as a clearance monitor. In some systems, e.g. those using multi-element arrays without supplementary clearance, a slight deterioration of certain antenna signals can cause serious degradation of the clearance with no change or only insignificant changes within the glide path sector as seen by the deviation sensitivity monitor. It is important to ensure that monitor alarm is achieved for any or all possible deteriorated antenna and radiated signal conditions, which may lead to a reduction of clearance to 0.175 DDM or less in the below-path clearance coverage.

2.5 Diagrams
(Figures C-6 to C-12 illustrate certain of the Standards contained in Chapter 3)

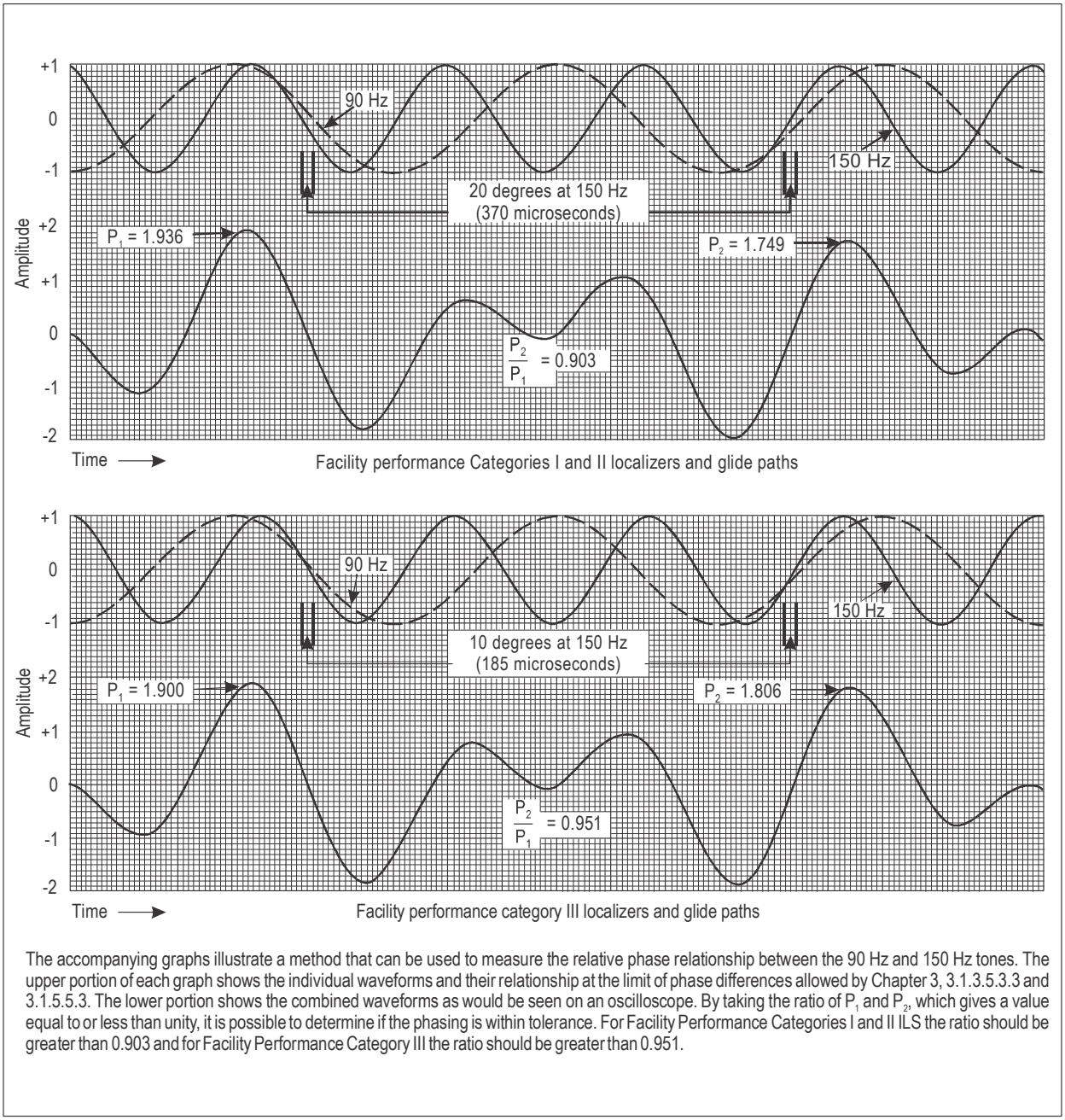

The accompanying graphs illustrate a method that can be used to measure the relative phase relationship between the 90 Hz and 150 Hz tones. The upper portion of each graph shows the individual waveforms and their relationship at the limit of phase differences allowed by Chapter 3, 3.1.3.5.3.3 and 3.1.5.5.3. The lower portion shows the combined waveforms as would be seen on an oscilloscope. By taking the ratio of P_1 and P_2, which gives a value equal to or less than unity, it is possible to determine if the phasing is within tolerance. For Facility Performance Categories I and II ILS the ratio should be greater than 0.903 and for Facility Performance Category III the ratio should be greater than 0.951.

Figure C-6. ILS wave forms illustrating relative audio phasing of the 90 Hz and 150 Hz tones

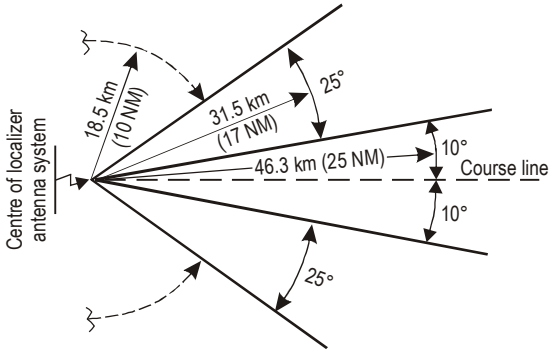

When topographical features dictate or operational requirements and alternative navigation facilities permit, the following coverage may be provided:

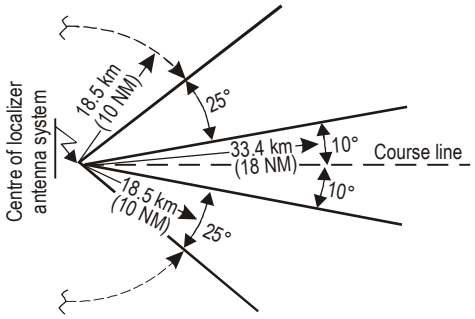

Note.— If coverage as prescribed in Chapter 3, 3.1.3.3.1 is required outside the plus or minus 35-degree sector, this is provided to 18.5 km (10 NM), as indicated by the broken arc above.

Figure C-7A. Localizer coverage with respect to azimuth

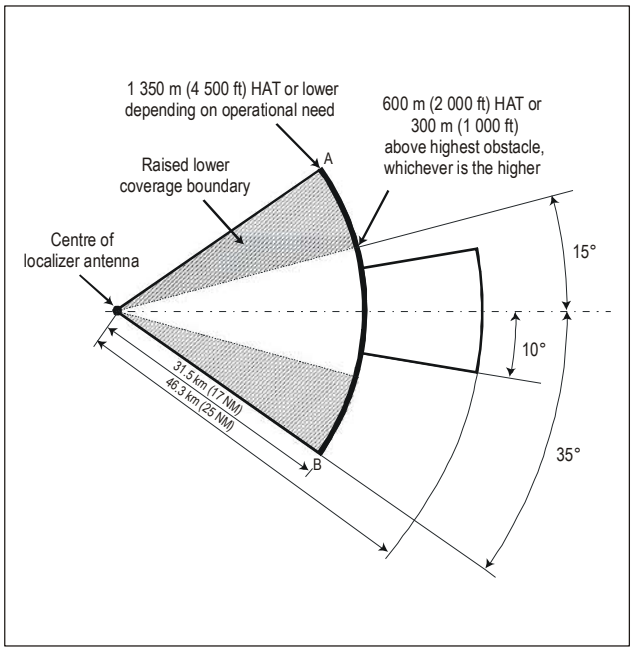

Figure C-7B. Reduced localizer coverage with respect to azimuth

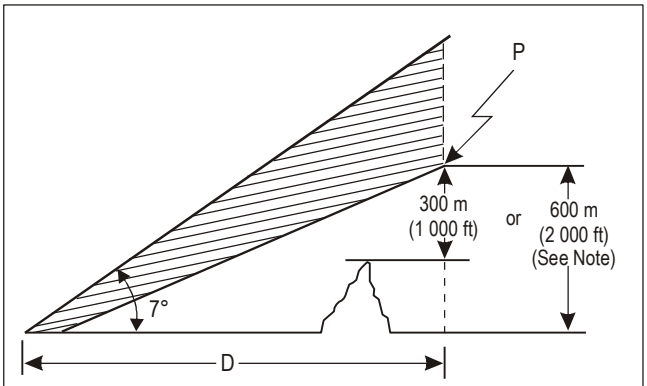

Note.— The point P is either 600 m (2 000 ft) above the elevation of the threshold, or 300 m (1 000 ft) above the elevation of the highest point within the intermediate and final approach areas, whichever is the higher.

Figure C-8A. Localizer coverage with respect to elevation

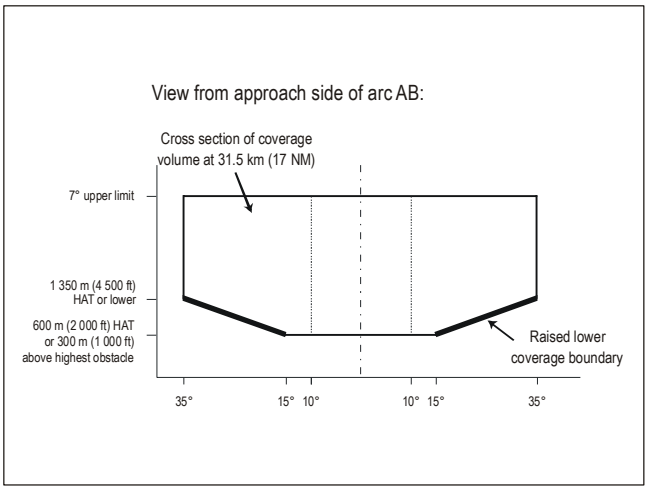

Figure C-8B. Reduced localizer coverage with respect to elevation

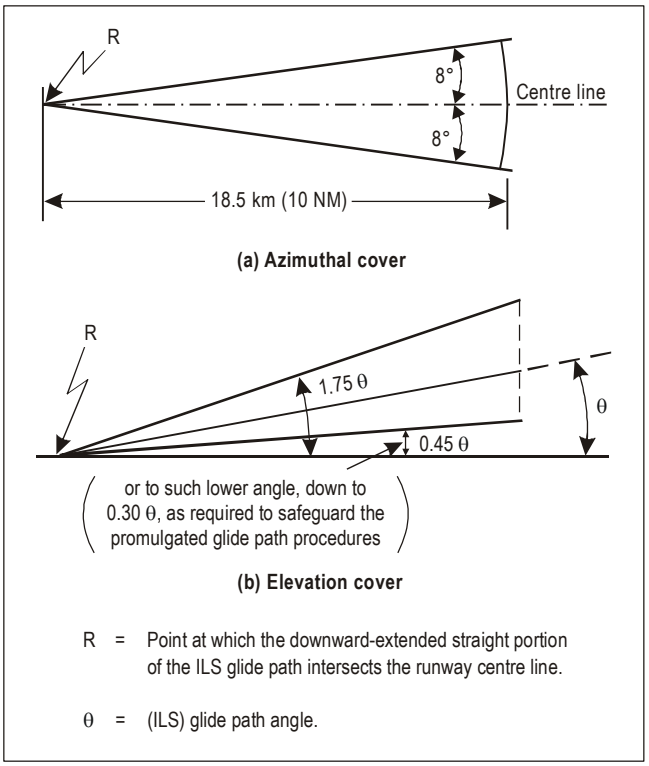

Figure 10. Glide path coverage

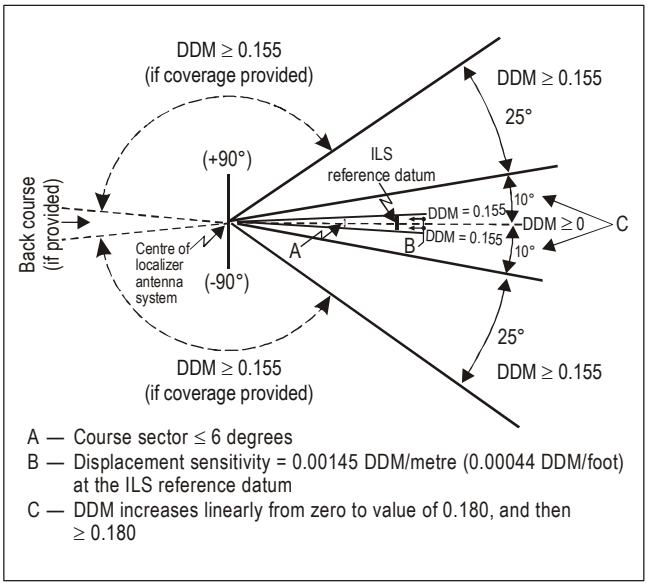

Figure 9. Difference in depth of modulation and displacement sensitivity

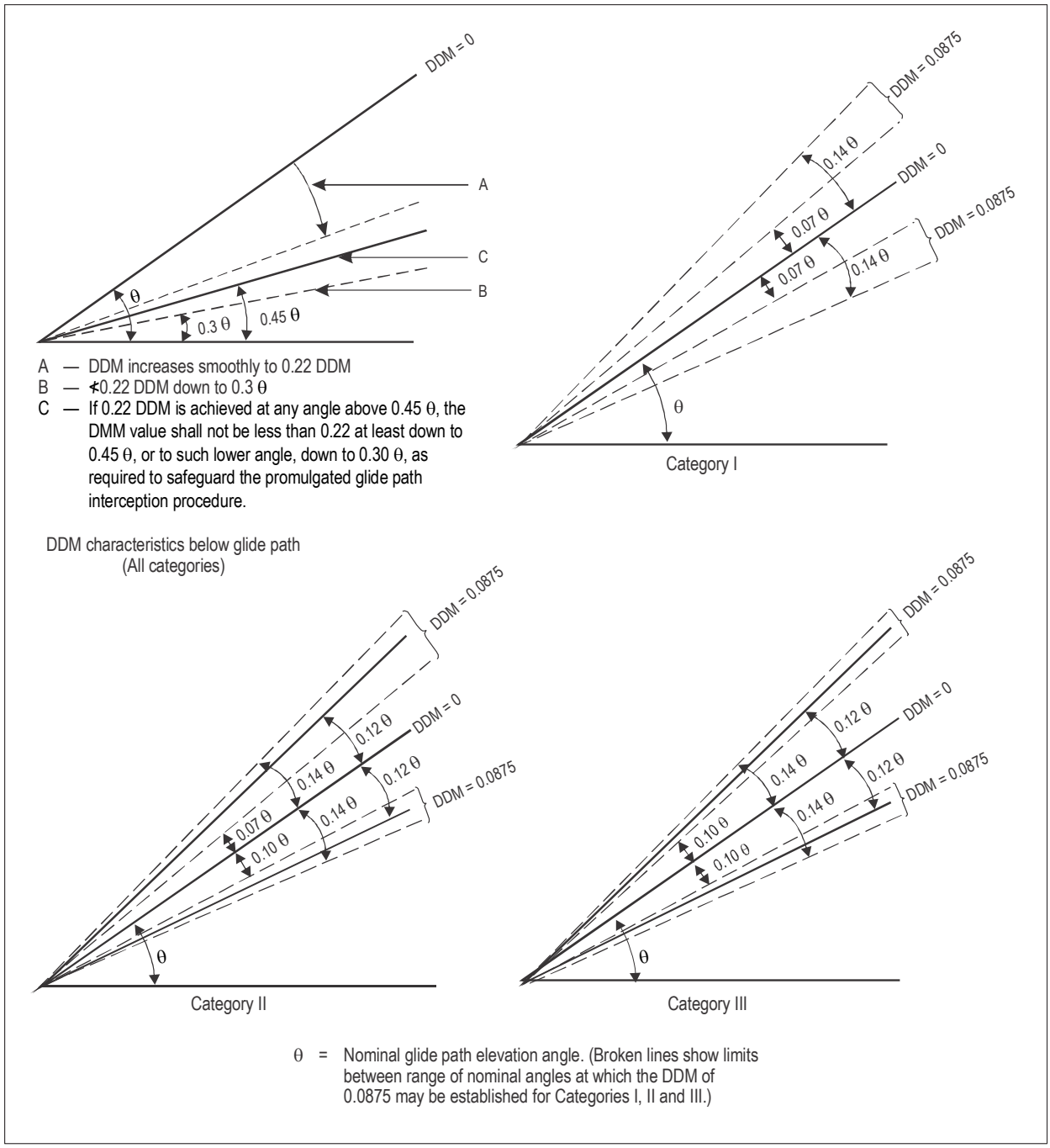

Figure C-11. Glide path — difference in depth of modulation

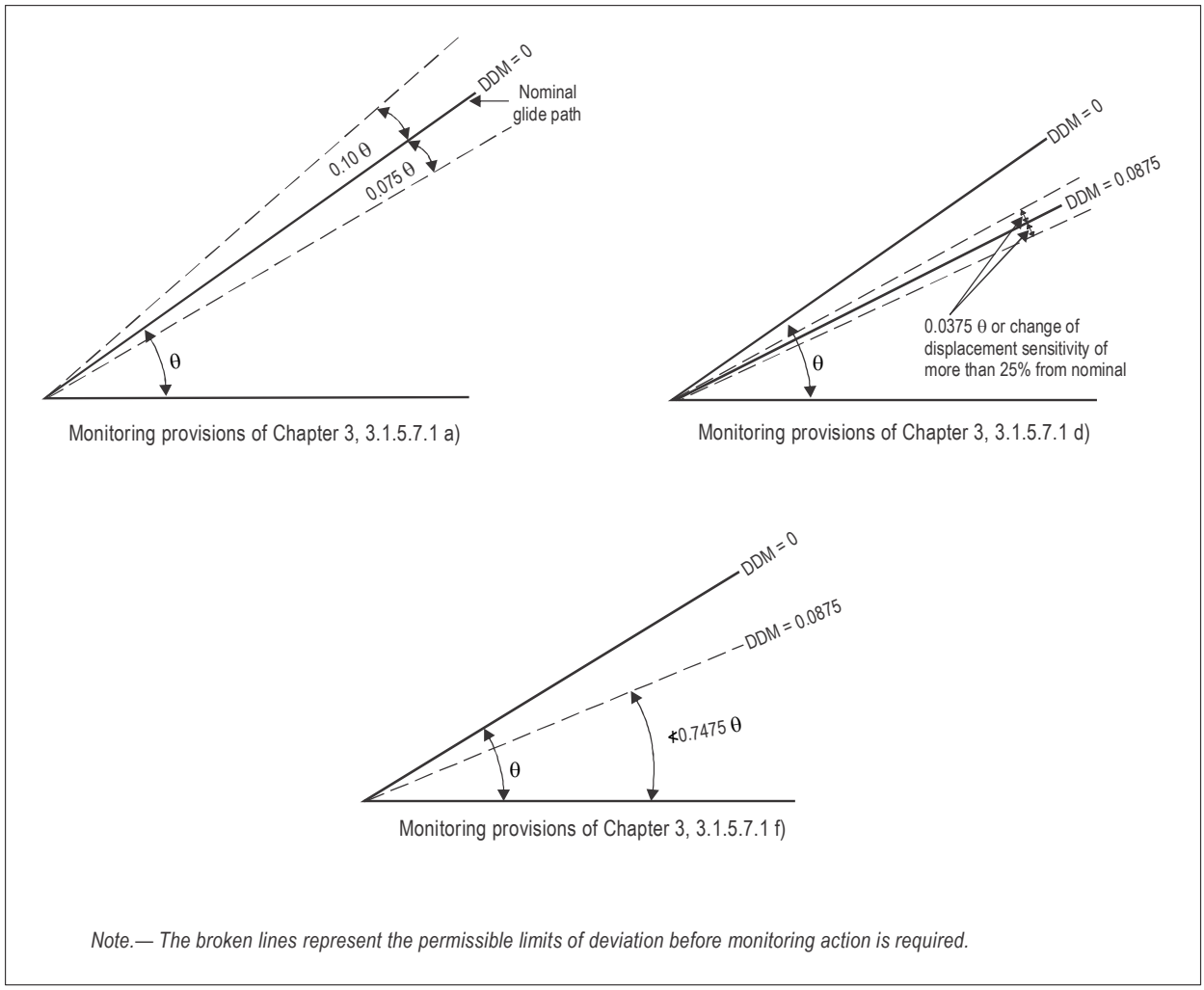

Figure C-12. Glide path monitoring provisions

2.6 Deployment of ILS frequencies

Note.— Guidance material on deployment of ILS frequencies is given in the Handbook on Radio Frequency Spectrum Requirements for Civil Aviation *(Doc 9718, Volume II), Chapter 3.*

2.7 Localizers and glide paths achieving coverage with two radio frequency carriers

2.7.1 Localizer and glide path facilities may achieve their coverage requirements by using two radiation field patterns, commonly known as the "course" and "clearance" patterns, transmitted using separate carrier frequencies spaced within the frequency channel. The course field pattern gives accurate course and displacement indications; the clearance field pattern provides displacement indications at angles beyond the limits of the course field pattern . Discrimination between signals is obtained in airborne receivers by the stronger signal capturing the receiver. Effectiveness of capture depends on the type of detector used but, in general, if the ratio of the two signals is of the order of 10 dB or more, the smaller signal does not cause significantly large errors in demodulated output. For optimum performance within the front course sector, the following guidance material should be applied in the operation of two carrier frequency localizer systems.

2.7.2 The localizer should be designed and maintained so that the ratio of the two radiated signals-in-space within the front course sector does not fall below 10 dB. Particular attention should be directed to the vertical lobe structure produced by the two antenna systems which may be different in height and separated in distance, thus resulting in changes in ratio of signal strengths during approach.

THIS PAGE INTENTIONALLY LEFT BLANK

THIS PAGE INTENTIONALLY LEFT BLANK

2.7.3 Due to the 6 dB allowance for the receiver pass-band filter ripple, localizer receiver response variations can occur as the clearance frequency is displaced from the course frequency. To minimize this effect, particularly for Category III operations, the course-to-clearance signal ratio needs to be increased from 10 dB to 16 dB.

2.7.4 To minimize further the risk of errors if the ratio of the two radiated signals falls below 10 dB within the front course sector, the difference in alignment of the radiation field patterns of the two signals should be kept as minimal as practicable.

2.7.5 Glide paths which employ two carriers are used to form a composite radiation field pattern on the same radio frequency channel. Special configurations of antennas and the distribution of antenna currents and phasing may permit siting of glide path facilities at locations with particular terrain conditions which may otherwise cause difficulty to a single-frequency system. At such sites, an improvement is obtained by reducing the low angle radiation. The second carrier is employed to provide coverage in the region below the glide path.

2.7.6 *Monitoring dual frequency systems.* The dual frequency monitoring requirements in Chapter 3, 3.1.3.11.2 e) and 3.1.5.7.1 c) specify monitor action for a power output of less than 80 per cent of normal, except that reductions can be accepted to 50 per cent of normal if certain performance requirements are met.

2.7.6.1 Monitoring the course and clearance transmitters for a 20 per cent reduction in power (approximately –1 dB) can be challenging if environmental and other effects such as large ambient temperature variations exist at the site. For example, temperature variations cause normal transmitter power output to vary and coaxial cable insertion losses to change. Even assuming no failure occurs in the transmitting system, the alarm limit occasionally may be exceeded, and this in turn may compromise continuity.

2.7.6.2 The alternative of monitoring at power reductions of up to 50 per cent appears very attractive, but must be used cautiously. Monitoring each transmitter independently at a 50 per cent reduction can allow a large change from the nominal power ratio between the two transmitters if uncorrelated failures occur. This in turn may compromise the capture effect in the receiver, thus increasing structure errors or reducing clearance indications.

2.7.6.3 One solution is to use a monitoring scheme that limits the difference between the power output of the transmitters to approximately 1 dB (i.e. 80 per cent), while allowing both to decrease up to 3 dB (i.e. 50 per cent) if they change together. This method provides a greater tolerance for common mode effects such as cable loss changes due to temperature, and therefore increases continuity of service.

2.8 Integrity and continuity of service — ILS ground equipment

2.8.1 *Introduction*

2.8.1.1 This material is intended to provide clarification of the integrity and continuity of service objectives of ILS localizer and glide path ground equipment and to provide guidance on engineering design and system characteristics of this equipment. Integrity is needed to ensure that an aircraft on approach will have a low probability of receiving false guidance; continuity of service is needed to ensure that an aircraft in the final stages of approach will have a low probability of being deprived of a guidance signal. Integrity and continuity of service are both key safety factors during the critical phase of approach and landing. The integrity and continuity of service must of necessity be known from an operational viewpoint in order to decide the operational application which an ILS could support.

2.8.1.2 It is generally accepted, irrespective of the operational objective, that the average rate of a fatal accident during landing, due to failures or shortcomings in the whole system, comprising the ground equipment, the aircraft and the pilot, should not exceed 1×10^{-7}. This criterion is frequently referred to as the global risk factor.

2.8.1.3 In the case of Category I operations, responsibility for assuring that the above objective is not exceeded is vested more or less completely in the pilot. In Category III operations, the same objective is required but must now be inherent in the whole system. In this context it is of the utmost importance to endeavour to achieve the highest level of integrity and continuity of service of the ground equipment.

2.8.1.4 The requirements for integrity and high continuity of service require highly reliable systems to minimize the probability of failure which may affect any characteristic of the total signal-in-space. It is suggested that States endeavour to achieve reliability with as large a margin as is technically and economically reasonable. Reliability of equipment is governed by basic construction and operating environment. Equipment design should employ the most suitable engineering techniques, materials and components, and rigorous inspection should be applied in manufacture. Equipment should be operated in environmental conditions appropriate to the manufacturers' design criteria.

2.8.2 *Achievement and retention of integrity service levels*

2.8.2.1 An integrity failure can occur if radiation of a signal which is outside specified tolerances is either unrecognized by the monitoring equipment or the control circuits fail to remove the faulty signal. Such a failure might constitute a hazard if it results in a gross error.

2.8.2.2 Clearly not all integrity failures are hazardous in all phases of the approach. For example, during the critical stages of the approach, undetected failures producing gross errors in course width or course line shifts are of special significance whereas an undetected change of modulation depth, or loss of localizer and glide slope clearance and localizer identification would not necessarily produce a hazardous situation. The criterion in assessing which failure modes are relevant must however include all those deleterious fault conditions which are not unquestionably obvious to the automatic flight system or pilot.

2.8.2.3 The highest order of protection is required against the risk of undetected failures in the monitoring and associated control system. This would be achieved by careful design to reduce the probability of such occurrences to a low level and provide fail-safe operations compliant with the Standards of Chapter 3, 3.1.3.11.4 and 3.1.5.7.4, and by carrying out maintenance checks on the monitor system performance at intervals which are determined by a design analysis.

2.8.2.4 A design analysis can be used to calculate the level of integrity of the system in any one landing. The following formula applies to certain types of ILS and provides an example of the determination of system integrity, *I*, from a calculation of the probability of transmission of undetected erroneous radiation, *P*.

(1) $I = 1 - P$

$P = \frac{T_1 T_2}{\alpha_1 \alpha_2 M_1 M_2}$ when $T_1 < T_2$

where

I = integrity

P = the probability of a concurrent failure in transmitter and monitor systems resulting in erroneous undetected radiation

M_1 = transmitter mean time between failures (MTBF)

M_2 = MTBF of the monitoring and associated control system

$\frac{1}{\alpha_1}$ = ratio of the rate of failure in the transmitter resulting in the radiation of an erroneous signal to the rate of all transmitter failures

$\frac{1}{\alpha_2}$ = ratio of the rate of failure in the monitoring and associated control system resulting in inability to detect an erroneous signal to the rate of all monitoring and associated control system failures

T_1 = period of time (in hours) between transmitter checks

T_2 = period of time (in hours) between checks on the monitoring and associated control system

When $T_1 \geq T_2$ the monitor system check may also be considered a transmitter check. In this case, therefore $T_1 = T_2$ and the formula would be:

(2) $$P = \frac{T_2^2}{\alpha_1 \alpha_2 M_1 M_2}$$

2.8.2.5 Since the probability of occurrence of an unsafe failure within the monitoring or control equipment is extremely remote, to establish the required integrity level with a high degree of confidence would necessitate an evaluation period many times that needed to establish the equipment MTBF. Such a protracted period is unacceptable and therefore the required integrity level can only be predicted by rigorous design analysis of the equipment.

2.8.2.6 Protection of the integrity of the signal-in-space against degradation which can arise from extraneous radio interference falling within the ILS frequency band or from re-radiation of ILS signals must also be considered. Measures to prevent the latter by critical and sensitive area protection are given in general terms at 2.1.9. With regard to radio interference it may be necessary to confirm periodically that the level of interference does not constitute a hazard.

2.8.2.7 In general, monitoring equipment design is based on the principle of continuously monitoring the radiated signals-in-space at specific points within the coverage volume to ensure their compliance with the Standards specified at Chapter 3, 3.1.3.11 and 3.1.5.7. Although such monitoring provides to some extent an indication that the signal-in-space at all other points in the coverage volume is similarly within tolerance, this is largely inferred. It is essential therefore to carry out rigorous flight and ground inspections at periodic intervals to ensure the integrity of the signal-in-space throughout the coverage volume.

2.8.3 *Achievement and retention of continuity of service levels*

2.8.3.1 A design analysis should be used to predict the MTBF and continuity of service of the ILS equipment. Before assignment of a level of continuity of service and introduction into service, the mean time between outages (MTBO) of the Level 2, 3 or 4 ILS should be confirmed by evaluation in an operational environment. In this evaluation, an outage is defined as any unanticipated cessation of signal-in-space. This evaluation takes into account the impact of operational factors, i.e. airport environment, inclement weather conditions, power availability, quality and frequency of maintenance. MTBO is related to MTBF, but is not equivalent, as some equipment failures, such as a failure of a transmitter resulting in the immediate transfer to a standby transmitter may not necessarily result in an outage. For continuity of service Level 2, 3 or 4, the evaluation period should be sufficient to determine achievement of the required level with a high degree of confidence. One method to demonstrate that continuity standards are met is the sequential test method. If this method is used, the following considerations apply:

a) the minimum acceptable confidence level is 60 per cent. To achieve the confidence level of 60 per cent, the evaluation period has to be longer than the required MTBO hours as stated in Table C-3. Typically, these minimal evaluation periods for new and subsequent installations are for Level 2, 1 600 operating hours, for Level 3, 3 200 hours and for Level 4, 6 400 hours. To assess the seasonal influence of the environment, a minimal evaluation period of one year is typically required for a new type of installation in a particular environment. It may be possible to reduce this period in cases where the operating environment is well controlled and similar to other proven installations. Where several identical systems are being operated under similar conditions, it may be possible to base the assessment on the cumulative operating hours of all the systems; this will result in a reduced evaluation period. Once a higher confidence level is obtained for a type of installation, subsequent installation of the same type of equipment under similar operational and environmental conditions may follow shorter evaluation periods;

b) during the evaluation period, it should be decided for each outage if it is caused by a design failure or if it is caused by a failure of a component due to its normal failure rate. Design failures are, for instance, operating components beyond their specification (overheating, overcurrent, overvoltage, etc. conditions). These design failures should be dealt with such that the operating condition is brought back to the normal operating condition of the component or that the component is replaced with a part suitable for the operating conditions. If the design failure is treated in this way, the evaluation may continue and this outage is not counted, assuming that there is a high probability that this design failure will not occur again. The same applies to outages due to any causes which can be mitigated by permanent changes to the operating conditions.

2.8.3.2 An assigned continuity of service level should not be subject to frequent change. A suitable method to assess the behaviour of a particular installation is to keep the records and calculate the average MTBO over the last five to eight failures of the equipment. This weighs the MTBO for continuity of service purposes to be more relevant to the next approach, rather than computing MTBO over the lifetime of the equipment. If continuity of service deteriorates, the assigned designation should be reduced until improvements in performance can be effected.

2.8.3.3 *Additional detailed guidance.* Several States have published continuity of service policies and procedures. The following documents may be consulted for additional guidance and details:

a) *European Guidance Material on Continuity of Service Evaluation in Support of the Certification of ILS & MLS Ground Systems*, EUR DOC 012; and

b) *Instrument Landing System Continuity of Service Requirements and Procedures*, Order 6750.57A, United States Federal Aviation Administration.

2.8.4 The following configuration is an example of a redundant equipment arrangement that is likely to meet the objectives for integrity and continuity of service Levels 3 and 4. The localizer and glide path facilities each consist of two continuously operating transmitters, one connected to the antenna and the standby connected to a dummy load. With these transmitters is associated a monitor system performing the following functions:

a) confirming proper operation within the specified limits of the main transmitter and antenna system by means of majority voting among redundant monitors;

b) confirming operation of the standby equipment.

2.8.4.1 Whenever the monitor system rejects one of the equipments the facility continuity of service level will be reduced because the probability of cessation of signal consequent on failure of other equipment will be increased. This change of performance must be automatically indicated at remote locations.

2.8.4.2 An identical monitoring arrangement to the localizer is used for the glide path facility.

2.8.4.3 To reduce mutual interference between the main and standby transmitters any stray radiation from the latter is at least 50 dB below the carrier level of the main transmitter measured at the antenna system.

2.8.4.4 In the above example, the equipment would include provision to facilitate monitoring system checks at intervals specified by the manufacturer, consequent to the design analysis, to ensure attainment of the required integrity level. Such checks, which can be manual or automatic, provide the means to verify correct operation of the monitoring system including the control circuitry and changeover switching system. The advantage of adopting an automatic monitor integrity test is that no interruption to the operational service provided by the localizer or glide path is necessary. It is important when using this technique to ensure that the total duration of the check cycle is short enough not to exceed the total period specified in Chapter 3, 3.1.3.11.3 or 3.1.5.7.3.

2.8.4.5 Interruption of facility operation due to primary power failures is avoided by the provision of suitable standby supplies, such as batteries or "no-break" generators. Under these conditions, the facility should be capable of continuing in operation over the period when an aircraft may be in the critical stages of the approach. Therefore the standby supply should have adequate capacity to sustain service for at least two minutes.

2.8.4.6 Warnings of failures of critical parts of the system, such as the failure of the primary power supply, must be given at the designated control points.

2.8.4.7 In order to reduce failure of equipment that may be operating near its monitor tolerance limits, it is useful for the monitor system to include provision to generate a pre-alarm warning signal to the designated control point when the monitored parameters reach a limit equal to a value in the order of 75 per cent of the monitor alarm limit.

2.8.4.8 An equipment arrangement similar to that at 2.8.4, but with no transmitter redundancy, would normally be expected to achieve the objectives for continuity of service Level 2.

2.8.5 Guidance relating to localizer far field monitors is given below.

2.8.5.1 Far field monitors are provided to monitor course alignment but may also be used to monitor course sensitivity. A far field monitor operates independently from integral and near field monitors. Its primary purpose is to protect against the risk of erroneous setting-up of the localizer, or faults in the near field or integral monitors. In addition, the far field monitor system will enhance the ability of the combined monitor system to respond to the effects of physical modification of the radiating elements or variations in the ground reflection characteristics. Moreover, multipath effects and runway area disturbances not seen by near field and integral monitors, and some occurrences of radio interferences may be substantially monitored by using a far field monitoring system built around a suitable receiver(s), installed under the approach path.

2.8.5.2 A far field monitor is generally considered essential for Category III operations, while for Category II it is generally considered to be desirable. Also for Category I installations, a far field monitor has proved to be a valuable tool to supplement the conventional monitor system.

2.8.5.3 The signal received by the far field monitor will suffer short-term interference effects caused by aircraft movements on or in the vicinity of the runway and experience has shown that it is not practical to use the far field monitor as an executive monitor. When used as a passive monitor, means must be adopted to minimize such temporary interference effects and to reduce the occurrence of nuisance downgrade indications; some methods of achieving this are covered in 2.8.5.4. The response of the far field monitor to interference effects offers the possibility of indicating to the air traffic control point when temporary disturbance of the localizer signal is present. However, experience has shown that disturbances due to aircraft movements may be present along the runway, including the touchdown zone, and not always be observed at the far field monitor. It must not be assumed, therefore, that a far field monitor can provide comprehensive surveillance of aircraft movements on the runway.

2.8.5.3.1 Additional possible applications of the far field monitor are as follows:

a) it can be a useful maintenance aid to verify course and/or course deviation sensitivity in lieu of a portable far field monitor;

b) it may be used to provide a continuous recording of far field signal performance showing the quality of the far field signal and the extent of signal disturbance.

2.8.5.4 Possible methods of reducing the occurrence of nuisance downgrade indications include:

a) incorporation of a time delay within the system adjustable from 30 to 240 seconds;

b) the use of a validation technique to ensure that only indications not affected by transitory disturbances are transmitted to the control system;

c) use of low pass filtering.

2.8.5.5 A typical far field monitor consists of an antenna, VHF receiver and associated monitoring units which provide indications of DDM, modulation sum, and RF signal level. The receiving antenna is usually of a directional type to minimize unwanted interference and should be at the greatest height compatible with obstacle clearance limits. For course line monitoring, the antenna is usually positioned along the extended runway centre line. Where it is desired to also monitor displacement sensitivity, an additional receiver and monitor are installed with antenna suitably positioned to one side of the extended runway centre line. Some systems utilize a number of spatially separated antennas.

2.9 Localizer and glide path displacement sensitivities

2.9.1 Although certain localizer and glide path alignment and displacement sensitivities are specified in relation to the ILS reference datum, it is not intended to imply that measurement of these parameters must be made at this datum.

2.9.2 Localizer monitor system limits and adjustment and maintenance limits given in Chapter 3, 3.1.3.7 and 3.1.3.11 are stated as percentage changes of displacement sensitivity. This concept, which replaces specifications of angular width in earlier editions, has been introduced because the response of aircraft guidance systems is directly related to displacement sensitivity. It will be noted that angular width is inversely proportional to displacement sensitivity.

2.10 Siting of ILS markers

2.10.1 Considerations of interference between inner and middle markers, and the minimum operationally acceptable time interval between inner and middle marker light indications, will limit the maximum height marked by the inner marker to a height on the ILS glide path of the order of 37 m (120 ft) above threshold for markers sited within present tolerances in Annex 10. A study of the individual site will determine the maximum height which can be marked, noting that with a typical airborne marker receiver a separation period of the order of 3 seconds at an aircraft speed of 140 kt between middle and inner marker light indications is the minimum operationally acceptable time interval.

2.10.2 In the case of ILS installations serving closely spaced parallel runways, e.g. 500 m (1 650 ft) apart, special measures are needed to ensure satisfactory operation of the marker beacons. Some States have found it practical to employ a common outer marker for both ILS installations. However, special provisions, e.g. modified field patterns, are needed in the case of the middle markers if mutual interference is to be avoided, and especially in cases where the thresholds are displaced longitudinally from one another.

2.11 Use of DME and/or other standard radio navigation aids as an alternative to ILS marker beacons

2.11.1 When DME is used as an alternative to ILS marker beacons, the DME should be located on the airport so that the zero range indication will be a point near the runway. If the DME associated with ILS uses a zero range offset, this facility has to be excluded from RNAV solutions.

2.11.1.1 In order to reduce the triangulation error, the DME should be sited to ensure a small angle (e.g. less than 20 degrees) between the approach path and the direction to the DME at the points where the distance information is required.

2.11.1.2 The use of DME as an alternative to the middle marker beacon assumes a DME system accuracy of 0.37 km (0.2 NM) or better and a resolution of the airborne indication such as to allow this accuracy to be attained.

2.11.1.3 While it is not specifically required that DME be frequency paired with the localizer when it is used as an alternative for the outer marker, frequency pairing is preferred wherever DME is used with ILS to simplify pilot operation and to enable aircraft with two ILS receivers to use both receivers on the ILS channel.

2.11.1.4 When the DME is frequency paired with the localizer, the DME transponder identification should be obtained by the "associated" signal from the frequency-paired localizer.

2.11.2 In some locations, the Competent Authority may authorize the use of other means to provide fixes as detailed in the *Procedures for Air Navigation Services — Aircraft Operations* (PANS-OPS) (Doc 8168), such as NDB, VOR or GNSS. This may be useful in particular in locations where aircraft user equipage with DME is low, or if the DME is out of service.

2.12 The use of supplementary sources of orientation guidance in association with ILS

2.12.1 Aircraft beginning an ILS approach may be assisted by guidance information provided by other ground referenced facilities such as VORs, surveillance radar or, where these facilities cannot be provided, by a locator beacon.

2.12.2 When not provided by existing terminal or en-route facilities, a VOR, suitably sited, will provide efficient transition to the ILS. To achieve this purpose the VOR may be sited on the localizer course or at a position some distance from the localizer course provided that a radial will intersect the localizer course at an angle which will allow smooth transitions in the case of auto coupling. The distance between the VOR site and the desired point of interception must be recognized when determining the accuracy of the interception and the airspace available to provide for tracking errors.

2.12.3 Where it is impracticable to provide a suitably sited VOR, a compass locator or an NDB can assist transition to the ILS. The facility should be sited on the localizer course at a suitable distance from the threshold to provide for optimum transition.

2.13 The use of Facility Performance Category I — ILS for automatic approaches and landings in visibility conditions permitting visual monitoring of the operation by the pilot

2.13.1 Facility Performance Category I — ILS installations of suitable quality can be used, in combination with aircraft flight control systems of types not relying solely on the guidance information derived from the ILS sensors, for automatic approaches and automatic landings in visibility conditions permitting visual monitoring of the operation by the pilot.

2.13.2 To assist aircraft operating agencies with the initial appraisal of the suitability of individual ILS installations for such operations, provider States are encouraged to promulgate:

a) the differences in any respect from Chapter 3, 3.1;

b) the extent of compliance with the provisions in Chapter 3, 3.1.3.4 and 3.1.5.4, regarding localizer and glide path beam structure; and

c) the height of the ILS reference datum above the threshold.

2.13.3 To avoid interference which might prevent the completion of an automatic approach and landing, it is necessary that local arrangements be made to protect, to the extent practicable, the ILS critical and sensitive areas.

2.14 ILS classification — supplementary ILS description method with objective to facilitate operational utilization

2.14.1 The classification system given below, in conjunction with the current facility performance categories, is intended to provide a more comprehensive method of describing an ILS.

2.14.2 The ILS localizer classification is defined by using three characters as follows:

a) I, II or III: this character indicates conformance to Facility Performance Category in Chapter 3, 3.1.3.

b) A, B, C, T, D or E: this character defines the ILS points to which the localizer structure conforms to the course structure given at Chapter 3, 3.1.3.4.2, except the letter T, which designates the runway threshold. The points are defined in Chapter 3, 3.1.1.

c) 1, 2, 3 or 4: this number indicates the level of integrity and continuity of service of the localizer as defined in Chapter 3, 3.1.3.12 and summarized in Table C-3.

2.14.3 The ILS glide path classification is defined by using three characters as follows:

a) I, II or III: this character indicates conformance to Facility Performance Category in Chapter 3, 3.1.3 and 3.1.5.

b) A, B, C or T: this character defines the ILS points to which the glide path structure conforms to the path structure given at Chapter 3, 3.1.5.4.2, except the letter T, which designates the runway threshold. The points are defined in Chapter 3, 3.1.1.

c) 1, 2, 3 or 4: this number indicates the level of integrity and continuity of service of the glide path as defined in Chapter 3, 3.1.5.8 and summarized in Table C-3.

2.14.4 *Examples*

2.14.4.1 As an example, a Facility Performance Category II — localizer which meets the localizer course structure criteria appropriate to a Facility Performance Category III — localizer down to ILS point “D” and conforms to the integrity and continuity of service objectives of Level 3 would be described as class II/D/3.

2.14.4.2 As an example, a Facility Performance Category I — glide path which meets the glide path structure criteria appropriate to a Facility Performance Category III — glide path down to ILS point “T” and conforms to the integrity and continuity of service objectives of Level 3 would be described as class I/T/3.

2.14.5 ILS classes are appropriate only to the ground ILS element. Consideration of operational categories must also include additional factors such as operator capability, critical and sensitive area protection, procedural criteria and ancillary aids, such as transmissometers and lights.

2.15 ILS carrier frequency and phase modulation

2.15.1 In addition to the desired 90 Hz and 150 Hz AM modulation of the ILS RF carriers, undesired frequency modulation (FM) and/or phase modulation (PM) may exist. This undesired modulation can cause centring errors in ILS receivers due to slope detection by ripple in the intermediate frequency (IF) filter pass-band.

2.15.2 For this to occur, the translated RF carrier frequency must fall on an IF frequency where the pass-band has a high slope. The slope converts the undesired 90 Hz and 150 Hz frequency changes to AM of the same frequencies. Similarly, any difference in FM deviation between the undesired 90 Hz and 150 Hz components is converted to DDM, which in turn produces an offset in the receiver. The mechanism is identical for PM as for FM, since PM causes a change in frequency equal to the change in phase (radians) multiplied by the modulating frequency.

Table C-3. Integrity and continuity of service objectives

Level	Localizer or glide path		
	Integrity	Continuity of service	MTBO (hours)
1		Not demonstrated, or less than required for Level 2	
2	$1 - 10^{-7}$ in any one landing	$1 - 4 \times 10^{-6}$ in any period of 15 seconds	1 000
3	$1 - 0.5 \times 10^{-9}$ in any one landing	$1 - 2 \times 10^{-6}$ in any period of 15 seconds	2 000
4	$1 - 0.5 \times 10^{-9}$ in any one landing	$1 - 2 \times 10^{-6}$ in any period of 30 seconds (localizer) 15 seconds (glide path)	4 000 (localizer) 2 000 (glide path)

Note.— For currently installed systems, in the event that the Level 2 integrity value is not available or cannot be readily calculated, it is necessary to at least perform a detailed analysis of the integrity to assure proper monitor fail-safe operation.

2.15.3 The effect of the undesired FM and/or PM is summed by vector addition to the desired AM. The detected FM is either in phase or anti-phase with the AM according to whether the pass-band slope at the carrier's IF is positive or negative. The detected PM is in quadrature with the AM, and may also be positive or negative according to the pass-band slope.

2.15.4 Undesired FM and/or PM from frequencies other than 90 Hz and 150 Hz, but which pass through the 90 Hz and 150 Hz tone filters of the receiver, can also cause changes to the desired 90 Hz and 150 Hz AM modulation of the ILS RF carrier, resulting in a DDM offset error in the receiver. Thus, it is essential that when measuring undesired FM and PM levels, audio band-pass filters with a pass-band at least as wide as that of the tone filters of ILS receivers be used. These filters are typically inserted in commercial modulation meter test equipment between the demodulation and metering circuits, to ensure that only spectral components of interest to ILS applications are measured. To standardize such measurements, the filter characteristics are recommended as shown below:

Frequency (Hz)	*90 Hz band-pass filter attenuation, dB*	*150 Hz band-pass filter attenuation, dB*
≤45	–10	–16
85	–0.5	(no specification)
90	0	–14
95	–0.5	(no specification)
142	(no specification)	–0.5
150	–14	0
158	(no specification)	–0.5
≥300	–16	–10

2.15.5 The preferred maximum limits, as shown below, are derived from ILS receiver centring error limits specified in EUROCAE documents ED-46B and ED-47B, based on the worst-case-to-date observed correlation between undesired modulation levels and centring errors:

Facility type	*90 Hz peak deviation, FM Hz/PM radians (Note 1)*	*150 Hz peak deviation, FM Hz/PM radians (Note 2)*	*Deviation difference, Hz (Note 3)*
Localizer, Cat I	135/1.5	135/0.9	45
Localizer, Cat II	60/0.66	60/0.4	20
Localizer, Cat III	45/0.5	45/0.3	15
Glide path, Cat I	150/1.66	150/1.0	50
Glide path, Cat II or III	90/1.0	90/0.6	30

Note 1.— This column applies to the peak frequency or phase deviation as measured with the 90 Hz tone filter specified in 2.15.4.

Note 2.— This column applies to the peak frequency or phase deviation as measured with the 150 Hz tone filter specified in 2.15.4.

Note 3.— This column applies to the difference in peak frequency deviation between the separate measurements of the undesired 90 Hz FM (or equivalent PM) and the 150 Hz FM (or equivalent PM) obtained with the filters specified in the table in 2.15.4. The equivalent deviation for 90 Hz and 150 Hz measured PM values is calculated by multiplying each peak PM measurement in radians by its corresponding modulating frequency in Hz.

3. Material concerning VOR/DVOR

3.1 Guidance relating to VOR/DVOR equivalent isotropically radiated power (EIRP) and coverage

Note.— Unless specifically mentioned, all guidance material provided below applies to VOR and DVOR signals.

3.1.1 The field strength specified at Chapter 3, 3.3.4.2, is based on the following consideration:

Airborne receiver sensitivity	–117 dBW
Transmission line loss, mismatch loss, antenna polar pattern variation with respect to an isotropic antenna	+7 dB
Power required at antenna	–110 dBW

The power required of minus 110 dBW is obtained at 118 MHz with a power density of minus 107 dBW/m^2; minus 107 dBW/m^2 is equivalent to 90 microvolts per metre, i.e. plus 39 dB referenced to 1 microvolt per metre.

Note.— The power density for the case of an isotropic antenna may be computed in the following manner:

$$P_d = P_a - 10 \log \frac{\lambda^2}{4\pi}$$

where

P_d = *power density in dBW/m^2;*

P_a = *power at receiving point in dBW;*

λ = *wavelength in metres.*

3.1.2 The necessary EIRP to achieve a field strength of 90 microvolts per metre (minus 107 dBW/m^2) is given in Figure C-13. The field strength is directly proportional to the antenna elevation pattern. The actual radiation patterns of the antennas depend on a number of factors such as height of the antenna phase centre above ground level (AGL), surface roughness, terrain form and conductivity of ground and counterpoise. However, to account for lowest EIRP in notches between the lobes of the real elevation antenna pattern, a conservative value has been provided. Whenever more precise system data are available, a more precise estimation of range is permissible. Further guidance may be found in the *Handbook on Radio Frequency Spectrum Requirements for Civil Aviation including statement of approved ICAO policies* (Doc 9718).

3.2 Guidance in respect of siting of VOR

3.2.1 VOR is susceptible to multipath interference from surrounding terrain, buildings, trees and power lines. The effect of this should therefore be considered when selecting a site for a new facility, and when considering the acceptability of proposed developments in the vicinity of established sites. Doppler VOR is more resistant to multipath interference than conventional VOR and may be used to provide acceptable performance on more challenging multipath sites.

Note.— Guidance on siting of VOR is given in documents EUROCAE ED-52 (including Amendment No. 1), United States Federal Aviation Administration Order 6820.10 and ICAO EUR DOC 015 (First Edition).

3.2.2 The impact of wind farm developments on VOR is an increasing problem in many States due to the growth of interest in alternative energy sources. The impact of wind farms on VOR is difficult to assess for several reasons, including:

a) the cumulative effect of a group of turbines may be unacceptable even though the effect of each of the turbines may be acceptable individually;

b) worst-case errors may be experienced when the turbine blades are stationary (due to either high or low wind speeds). The actual error is a function of the orientation of the turbine and position of the turbine blades when stationary;

c) worst-case errors are likely to be experienced at the limit of coverage and at low elevation angles; and

d) it is unlikely that the worst-case errors can be confirmed by flight inspections due to the factors listed above.

3.2.3 Computer simulations can be used to assess the effect of wind farms on VOR using worst-case assumptions, as outlined above.

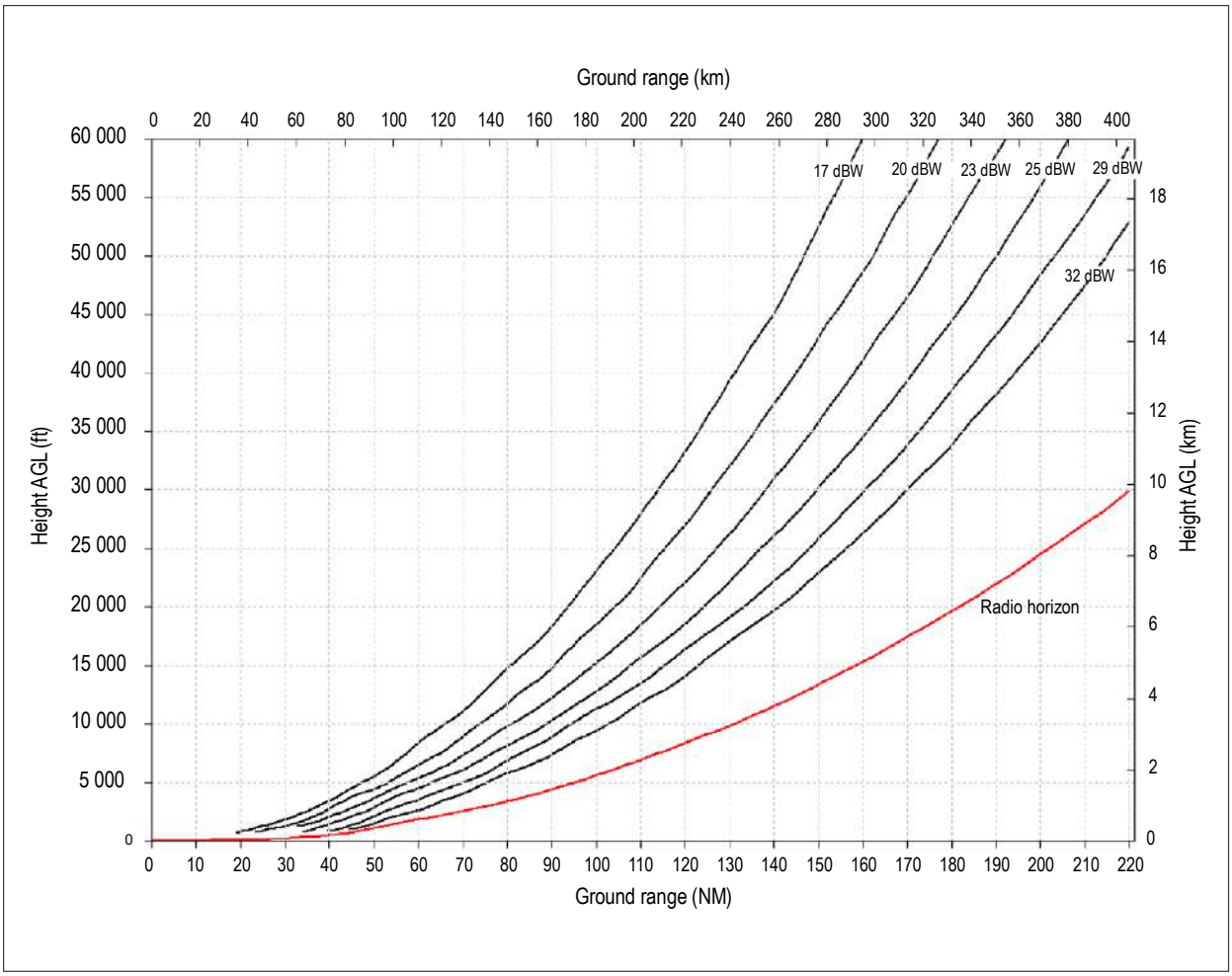

Figure C-13. Necessary EIRP to achieve a field strength of 90 microvolts per metre (−107 dBW/m^2) as a function of height above and distance from the VOR/DVOR

Note 1.— The curves are based on the IF-77 propagation model with a 4/3 Earth radius which has been confirmed by measurements.

Note 2.— The guidance provided assumes that the VOR/DVOR counterpoise height above ground level (AGL) that defines the antenna pattern is at 3 m (10 ft) AGL over flat terrain. Terrain shielding will reduce the achievable range.

Note 3.— The transmitted power required to achieve an EIRP value as shown depends upon transmitting antenna gain and cable losses. As an example, an EIRP of 25 dBW can be achieved by a VOR with an output power of 100 W, a cable loss of 1 dB and an antenna gain of 6 dBi.

3.3 [Reserved]

3.4 Criteria for geographical separation of VOR type facilities

Note.— Guidance material on criteria for geographical separation of VOR type facilities is given in the Handbook on Radio Frequency Spectrum Requirements for Civil Aviation *(Doc 9718, Volume II), Chapter 4.*

3.5 Criteria for geographical separation of VOR/ILS facilities

Note.— Guidance material on criteria for geographical separation of VOR/ILS facilities is given in the Handbook on Radio Frequency Spectrum Requirements for Civil Aviation *(Doc 9718, Volume II), Chapter 4.*

3.6 Receiving function

3.6.1 *Sensitivity.* After due allowance has been made for aircraft feeder mismatch, attenuation loss and antenna polar diagram variation, the sensitivity of the receiving function should be such as to provide on a high percentage of occasions the accuracy of output specified in 3.6.2, with a signal having a field strength of 90 microvolts per metre or minus 107 dBW/m^2.

3.6.2 *Accuracy.* The error contribution of the airborne installation should not exceed plus or minus 3 degrees with a 95 per cent probability.

Note 1.— The assessment of the error contribution of the receiver will need to take account of:

1) the tolerance of the modulation components of the ground VOR facility as defined in Chapter 3, 3.3.5;

2) variation in signal level and carrier frequency of the ground VOR facility;

3) the effects of unwanted VOR and ILS signals.

Note 2.— The airborne VOR installation is not considered to include any special elements which may be provided for the processing of VOR information in the aircraft and which may introduce errors of their own (e.g. radio magnetic indicator (RMI).).

3.6.3 *Flag alarm operation.* Ideally, the flag alarm should warn a pilot of any unacceptable malfunctioning conditions which might arise within either the ground or airborne equipments. The extent to which such an ideal might be satisfied is specified below.

3.6.3.1 The flag alarm movement is actuated by the sum of two currents which are derived from the 30 Hz and 9 960 Hz elements of the VOR bearing component signal and, therefore, the removal of these elements from the radiated carrier results in the appearance of the flags. Since the VOR ground monitor interrupts the bearing components when any unacceptable condition prevails on the ground, there will be an immediate indication within an aircraft when the system is unusable.

3.6.3.2 The flag alarm movement current is also dependent upon the AGC characteristics of the airborne equipment and any subsequent gain following the receiver's second detector. Thus, if with a correctly adjusted airborne receiver the flag is just out of view when receiving a VOR signal conforming to the modulation characteristics specified in Chapter 3, 3.3.5, the flags will again become visible in the event of a decrease in the receiver's overall gain characteristics.

Note.— Certain types of receivers employ warning indications other than mechanical flags to perform the functions described here.

3.6.4 *VOR receiver susceptibility to VOR and localizer signals*

Note.— Guidance material on VOR receiver susceptibility to VOR and localizer signals is given in the Handbook on Radio Frequency Spectrum Requirements for Civil Aviation *(Doc 9718, Volume II), Chapter 4.*

3.6.5 *Immunity performance of VOR receiving systems to interference from VHF FM broadcast signals*

Note.— Guidance material on VOR receiving systems to interference from VHF FM broadcast signals is given in the Handbook on Radio Frequency Spectrum Requirements for Civil Aviation *(Doc 9718, Volume II), Chapter 4.*

3.7 VOR system accuracy

Note.— Guidance material on the determination of VOR system performance values is also contained in Annex 11, Attachment A.

3.7.1 *Purpose.* The following guidance material is intended to assist in the use of VOR systems. It is not intended to represent lateral separation standards or minimum obstacle clearances, although it may of course provide a starting point in their determination. The setting of separation standards or minimum obstacle clearances will necessarily take account of many factors not covered by the following material.

3.7.1.1 There is, however, a need to indicate a system use accuracy figure for the guidance of States planning VOR systems.

3.7.2 *Explanation of terms.* The following terms are used with the meanings indicated:

a) *VOR radial signal error.* The difference between the nominal magnetic bearing to a point of measurement from the VOR ground station and the bearing indicated by the VOR signal at that same point. The VOR radial signal error is made up of certain stable elements, such as course displacement error and most site and terrain effect errors, and certain random variable errors. The VOR radial signal error is associated with the ground station only and excludes other error factors, such as airborne equipment errors and pilotage element.

b) *VOR radial variability error.* That part of the VOR radial signal error which can be expected to vary about the essentially constant remainder. The radial variability error is the sum of the variable errors.

c) *VOR radial displacement error.* That part of the VOR radial signal error which is stable and may be considered as fixed for long periods of time.

d) *VOR airborne equipment error.* That error attributable to the inability of the equipment in the aircraft to translate correctly the bearing information contained in the radial signal. This error includes the contributions of the airborne receiver and the instrumentation used to present the information to the pilot.

THIS PAGE INTENTIONALLY LEFT BLANK

THIS PAGE INTENTIONALLY LEFT BLANK

THIS PAGE INTENTIONALLY LEFT BLANK

THIS PAGE INTENTIONALLY LEFT BLANK

THIS PAGE INTENTIONALLY LEFT BLANK

e) *VOR aggregate error.* The difference between the magnetic bearing to a point of measurement from the VOR ground station and the bearing indicated by airborne VOR equipment of stated accuracy. More simply put, this is the error in the information presented to the pilot, taking into account not only the ground station and propagation path errors, but also the error contributed by the airborne VOR receiver and its instrumentation. The entire VOR radial signal error, both fixed and variable, is used.

f) *VOR pilotage element.* The error in the use of VOR navigation attributable to the fact that the pilot cannot or does not keep the aircraft precisely at the centre of the VOR radial or bearing indicated by the equipment.

g) *VOR system use error.* The square root of the sum of the squares (RSS) of VOR aggregate error and the pilotage element. This combination may be used to determine the probability of an aircraft remaining within specified limits when using VOR.

3.7.3 *Calculation of VOR system use accuracy*

3.7.3.1 The VOR system use accuracy is derived by considering the following error elements:

a) *VOR radial signal error* (Eg). This element consists of the radial displacement error and the radial variability error. It is determined by considering such factors as fixed radial displacement, monitoring, polarization effects, terrain effects and environment changes.

b) *VOR airborne equipment error* (Ea). This element embraces all factors in the airborne VOR system which introduces errors (errors resulting from the use of compass information in some VOR displays are not included).

c) *VOR pilotage element* (Ep). The value taken for this element is that used in PANS-OPS (Doc 8168) for pilot tolerance.

Note.— A measurement error also exists, but in a generalized discussion of errors may be considered to be absorbed in the other error values.

3.7.3.2 Since the errors in a), b), and c), when considered on a system basis (not any one radial) are independent variables, they may be combined on a root-sum-square method (RSS) when the same probability level is given to each element. For the purpose of this material, each element is considered to have a 95 per cent probability.

Therefore, the following formulae are derived:

$$\text{VOR aggregate error} = \sqrt{Eg^2 + Ea^2}$$

$$\text{VOR system use error} = \sqrt{Eg^2 + Ea^2 + Ep^2}$$

3.7.3.3 The following examples will derive only the VOR system use error but calculations can also be made to determine VOR aggregate error, if desired. By use of these formulae, the impact on the system of improvement or degradation of one of more error elements can be assessed.

Note.— All figures for VOR radial signal error are related to radials for which no restrictions are published.

3.7.3.4 Subject to the qualifications indicated in 3.7.1, it is considered that a VOR system use accuracy of plus or minus 5 degrees on a 95 per cent probability basis is a suitable figure for use by States planning the application of the VOR system (see, however, 3.7.3.5). This figure corresponds to the following component errors:

VOR radial signal error:

plus or minus 3° (95 per cent probability), a value readily achieved in practice.

VOR airborne equipment error:

plus or minus 3° (95 per cent probability), system characteristics value (see 3.6.2).

VOR pilotage element:

plus or minus 2.5° (95 per cent probability), in accordance with PANS-OPS (see also 3.7.3.8).

3.7.3.5 While the figure of plus or minus 5 degrees on a 95 per cent probability basis is a useful figure based on broad practical experience and used by many States, it must be noted that this figure may be achieved only if the error elements which make it up remain within certain tolerances. It is clear that, if the errors attributable to the VOR system elements are larger than the amounts noted, the resulting VOR system use error will also be larger. Conversely, where any or all of the VOR system error elements are smaller than those used in the above computation, the resulting VOR system use error will also be smaller.

3.7.3.6 The following examples, also derived from practical experience, provide additional planning guidance for States:

A.— *VOR radial signal error:*

plus or minus 3.5° (95 per cent probability), used by some States as the total ground system error.

VOR airborne equipment error:

plus or minus 4.2° (95 per cent probability), recognized in some States as the minimum performance figure for some classes of operations.

VOR pilotage element:

plus or minus 2.5° (95 per cent probability), in accordance with PANS-OPS (see also 3.7.3.8).

Calculated VOR system use accuracy:

plus or minus 6° (95 per cent probability).

B. — *VOR radial signal error:*

plus or minus 1.7° (95 per cent probability), based on extensive flight measurements conducted in one State on a large number of VORs.

VOR airborne equipment error:

plus or minus 2.7° (95 per cent probability), achieved in many airline operations.

VOR pilotage element:

plus or minus 2.5° (95 per cent probability), in accordance with PANS-OPS (see also 3.7.3.8).

Calculated VOR system use accuracy:

plus or minus 4° (95 per cent probability).

3.7.3.7 More realistic application of the VOR system may be achieved by assessing the errors as they actually exist in particular circumstances, rather than by using all-embracing generalizations which may give unduly optimistic or pessimistic results. In individual applications, it may be possible to utilize a system use accuracy value less than plus or minus 5 degrees if one or more of the error elements are smaller than the values used to compute the plus or minus 5 degrees. Conversely, a system use accuracy value greater than plus or minus 5 degrees will be necessary where it is known that radials are of poor quality or significant site errors exist, or for other reasons. However, in addition to this advice a warning is also essential regarding the use of lower values of individual elements in the system (for example, the radial signal error) on the assumption that an overall improvement in system accuracy will occur. There is considerable evidence that this may not be the case in some circumstances and that lower system accuracy values should not be applied without other confirmation (e.g. by radar observation) that an actual improvement in overall performance is being achieved.

3.7.3.8 It is to be noted that in angular systems such as the VOR, the pilotage element error, expressed in angular terms, will be greater as the aircraft nears the point source. Thus, while ground system and airborne error contributions, expressed in angular terms, are for all practical purposes constant at all ranges, it is necessary when considering the overall system use accuracy figures to take into account the larger pilotage element error occurring when the aircraft is near the VOR. However, these larger pilotage element errors do not result in large lateral deviations from course when near the facility.

3.8 Changeover points for VORs

Guidance on the establishment of changeover points on ATS routes defined by VORs is contained in Annex 11, Attachment A.

4. Precision approach radar system

Figures C-14 to C-18 illustrate certain of the Standards contained in Chapter 3, 3.2.

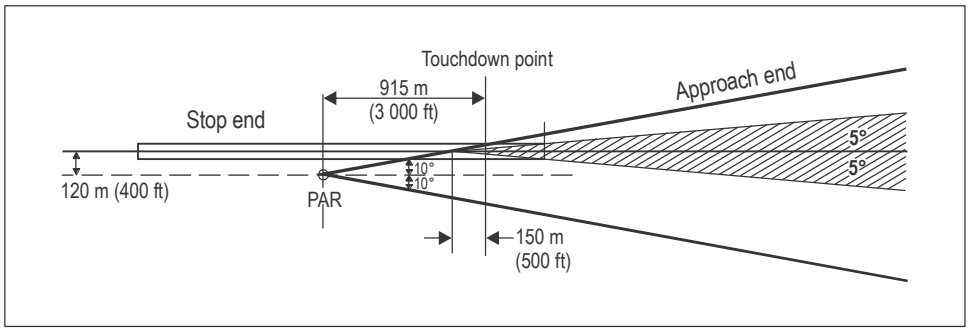

Figure C-14. Minimum set-back of PAR with respect to touchdown for offset of 120 m (400 ft) when aligned to scan plus or minus 10 degrees on QDR of runway

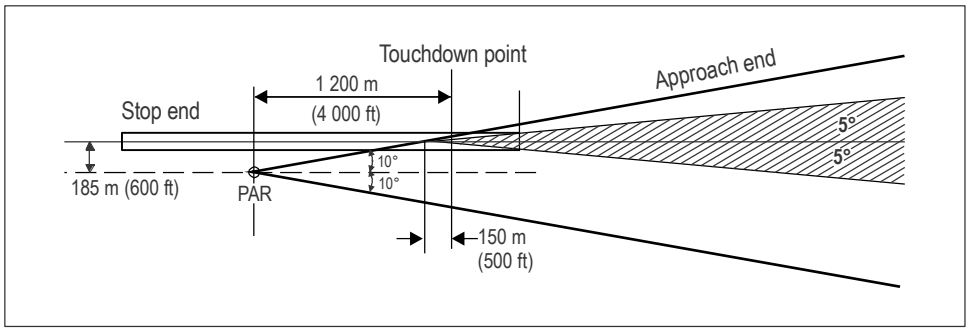

Figure C-15. Minimum set-back of PAR with respect to touchdown for offset of 185 m (600 ft) when aligned to scan plus or minus 10 degrees on QDR of runway

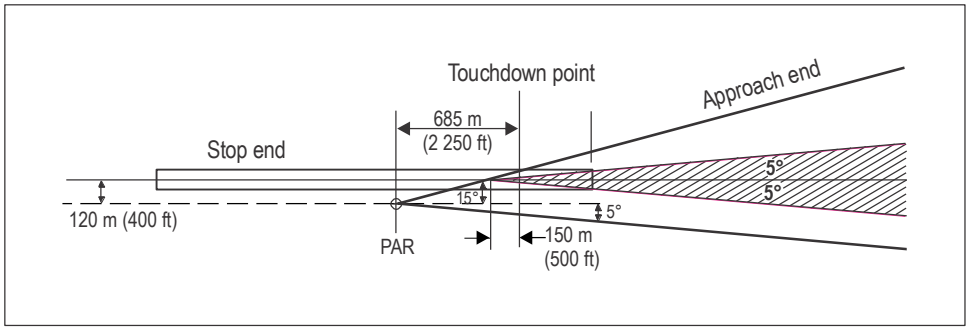

Figure C-16. Minimum set-back of PAR with respect to touchdown for offset of 120 m (400 ft) when aligned to scan 5 degrees and 15 degrees on QDR of runway

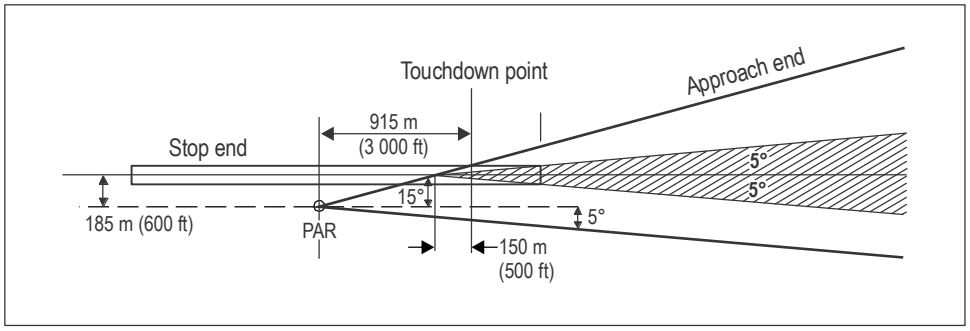

Figure C-17. Minimum set-back of PAR with respect to touchdown for offset of 185 m (600 ft) when aligned to scan 5 degrees and 15 degrees on QDR of runway

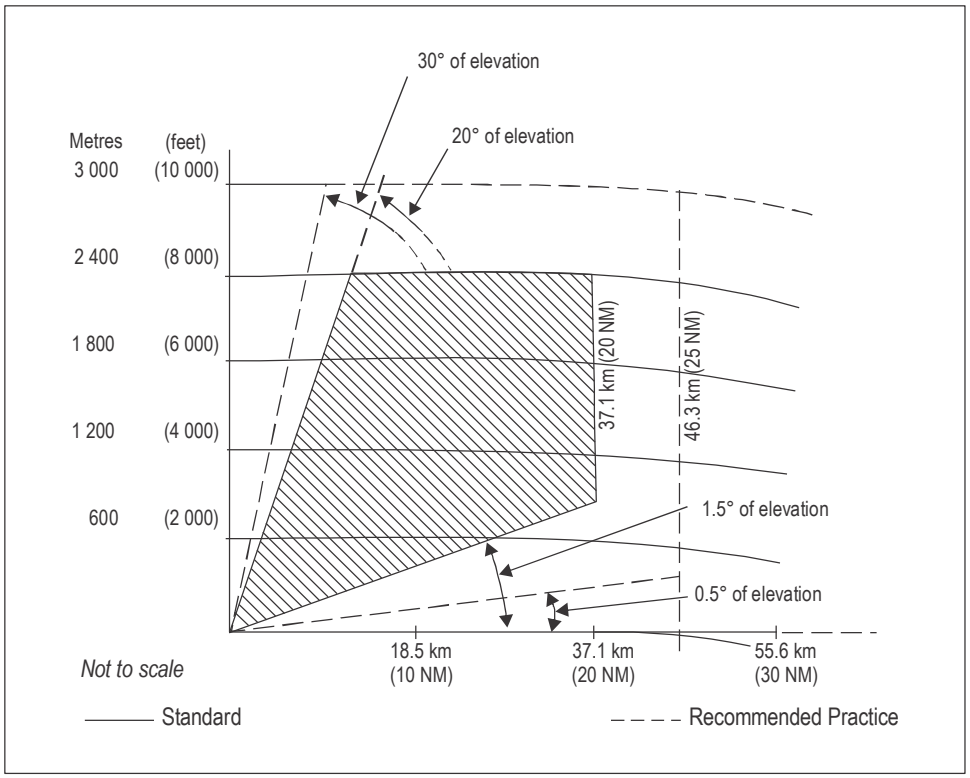

Figure C-18. SRE of precision approach radar system — vertical coverage on a 15 m^2 echoing area aircraft

5. Specification for 75 MHz marker beacons (en-route)

5.1 Marker beacon antenna arrays

5.1.1 *General.* The following describes types of marker antenna arrays that are frequently used in current practice. These types are the simplest forms meeting normal requirements; in special cases, arrays having a better performance (see Note to 5.1.4) may be required.

5.1.2 *Z marker beacons*

a) *Radiating system.* A radiating system consisting of two horizontal dipole arrays crossed at right angles, each comprising two co-linear half-wave radiating elements with centres spaced approximately a half wavelength apart and mounted one-quarter wavelength above the counterpoise. The currents in the dipoles and their respective elements are adjusted so that:

1) the current in one set of dipole arrays relative to that in the other set is equal but differs in time phase by 90 degrees;

2) the currents in the radiating elements of a particular dipole array are equal and in time phase.

b) *Counterpoise.* A square counterpoise with minimum dimensions of 9 m × 9 m, usually elevated about 1.8 m (6 ft) above the ground and, if fabricated from wire mesh, with the dimension of the mesh not exceeding 7.5 cm × 7.5 cm.

5.1.3 *Fan marker beacons for use only at low altitudes (low power fan marker beacons).* A radiating system capable of providing the field strengths indicated in Chapter 3, 3.1.7.3.2.

5.1.4 *Fan marker beacons for general use (high power fan marker beacons)*

a) *Radiating system.* A radiating system consisting of four horizontal co-linear half-wave (approximate) radiating elements mounted approximately one-quarter wavelength above the counterpoise. The current in each of the antenna elements should be in phase and should have a current ratio of 1:3:3:1.

Note.— The current distribution between elements and their height above the counterpoise may be altered to provide patterns for specific operational requirements. Improved vertical patterns for certain operational needs may be achieved by adjusting the height of the dipole arrays above the counterpoise to a value of one-quarter wavelength or greater, but less than a half wavelength.

b) *Counterpoise.* A rectangular counterpoise with minimum dimensions of 6 m × 12 m, usually elevated about 1.8 m (6 ft) above the ground and, if fabricated from wire mesh, with the dimension of the mesh not exceeding 7.5 cm × 7.5 cm.

5.2 Identification coding for fan marker beacons associated with a four-course radio range

5.2.1 Fan marker beacons located on the legs of a four-course radio range do not normally require an identification signal relating to a particular geographic location, but only a signal that will indicate the leg with which they are associated.

5.2.2 In the case of a four-course radio range having not more than one marker on any leg, it is current practice to identify a marker by a single dash if on the leg bearing true north or nearest to north in a clockwise direction (east), and to identify a marker on other legs by two, three or four dashes according to whether the leg with which it is associated is the second, third or fourth leg from north in a clockwise direction. Where more than one fan marker beacon is associated with one leg of a four-course radio range, the marker nearest to the station is identified by dashes only, the next nearest by two dots preceding the dashes, and the third by three dots preceding the dashes, and so on.

Note.— In certain special circumstances, the above coding system may lead to ambiguities due to two markers associated with the legs of different but overlapping radio ranges being geographically close together. In such cases, it is desirable to use a distinctive identification coding with one of the marker beacons.

6. Material concerning NDB

6.1 Guidance material on NDB field strength requirements in latitudes between 30°N and 30°S

6.1.1 In order to obtain a satisfactory service within the rated coverage of an NDB located in latitudes between 30°N and 30°S, a minimum value of field strength of 120 microvolts per metre would be required, except where practical experience in the operation of NDBs over several years has revealed that a minimum field strength of 70 microvolts per metre would be adequate to meet all the operational needs. In some specific areas, field strength values considerably in excess of 120 microvolts per metre would be required. Such areas are:

a) Indonesia and Papua New Guinea, Myanmar, Malay Peninsula, Thailand, Lao People's Democratic Republic, Democratic Kampuchea, Viet Nam and Northern Australia;

b) Caribbean and northern parts of South America;

c) Central and South Central Africa.

6.1.2 The field strength of 120 microvolts per metre is based upon practical experience to date and is a compromise between what is technically desirable and what it is economically possible to provide.

6.2 Guidance material on meaning and application of rated and effective coverage

6.2.1 *Rated coverage*

6.2.1.1 The rated coverage as defined in Chapter 3, 3.4.1, is a means of designating actual NDB performance, in a measurable way, which is dependent on the frequency, the radiated power, and the conductivity of the path between the NDB and a point on the boundary where the minimum value of field strength is specified.

6.2.1.2 The rated coverage has been found to be a useful means of facilitating regional planning and, in some instances, may be related to effective coverage.

6.2.1.3 The application of rated coverage to frequency planning is governed by the following criteria:

6.2.1.3.1 Frequencies should be deployed having regard to the rated coverage of the NDBs concerned, so that the ratio of the signal strength of any NDB at the boundary of its rated coverage to the total field strength due to co-channel stations and adjacent channel stations (with an appropriate allowance for the selectivity characteristics of a typical airborne receiver) is not less than 15 dB by day.

6.2.1.3.2 The figures set forth in Attachment B to Volume V of Annex 10 should be applied, as appropriate, in determining the allowance to be made for the attenuation of adjacent channel signals.

6.2.1.4 It follows from the application of rated coverage to frequency deployment planning that, unless otherwise specified, protection against harmful interference can only be ensured within the rated coverage of an NDB and, then, only if the radiated power of the NDBs is adjusted to provide within reasonably close limits the field strength required at the limit of the rated coverage. In areas where the density of NDBs is high, any NDB providing a signal at the limit of its rated coverage materially in excess of that agreed in the region concerned will give rise, in general, to harmful interference within the rated coverages of cochannel or adjacent channel NDBs in the area concerned, and will limit the number of NDBs which can be installed in the region within the available spectrum. It is important, therefore, that increases in radiated power beyond that necessary to provide the rated coverage, particularly at night when sky wave propagation may give rise to interference over long distances, should not be made without coordination with the authorities of the other stations likely to be affected (see Chapter 3, 3.4.3).

6.2.1.5 Frequency planning is considerably facilitated if a common value of minimum field strength within the desired coverage is used.

6.2.1.6 Extensive experience has shown that in relatively low noise level areas, such as Europe, the figure of 70 microvolts per metre is satisfactory.

6.2.1.6.1 Experience has also shown that the figure of 120 microvolts per metre is generally satisfactory for higher noise level areas but will be inadequate in areas of very high noise. In such areas, the information given in 6.3 may be used for general guidance.

6.2.2 *Relationship to effective coverage*

6.2.2.1 Rated coverage may have a close correlation to effective coverage under the following conditions:

a) when the minimum field strength within the rated coverage is such that, for most of the time, it exceeds the field strength due to atmospheric and other noise sufficiently to ensure that the latter will not distort the information presented in the aircraft to the extent that it is unusable;

b) when the ratio of the strength of the wanted signal to that of interfering signals exceeds the minimum required value at all points within the coverage, in order to ensure that interfering signals will also not distort the information presented in the aircraft to the extent that it is unusable.

6.2.2.2 Since, normally, the lowest signal within the coverage will occur at its boundary, these conditions imply that at the boundary the field strength should be such that its ratio to atmospheric noise levels would ensure usable indications in the aircraft for most of the time and that, in respect of the boundary value, overall planning should ensure that the ratio of its value to that of interfering signals exceeds the required value for most of the time.

6.2.2.3 Although the value of 70 microvolts per metre used for frequency deployment has been found successful in Europe (i.e. north of 30° latitude) in giving coverage values which closely approximate to effective coverage most of the time, experience is too limited to prove the suitability of the 120 microvolts per metre value for general application in areas of high noise. It is to be expected that rated coverages in high noise based on a boundary value of 120 microvolts per metre will, on many occasions, be substantially greater than the effective coverage achieved. In such areas, in order to secure a better correlation between rated coverage and an average of the achieved effective coverage, it may be advisable to choose a boundary value based more closely on the proportionality of noise in that area to the noise in areas where a boundary value has been satisfactorily established (e.g. Europe), or to determine an appropriate value from a statistical examination of achieved effective coverages in respect of an NDB in the area of known performance.

6.2.2.4 It is important to appreciate, however, that minimum values of field strength based on a simple comparison of noise levels in different areas may be insufficient, because factors such as the frequency of occurrence of noise, its character and effect on the airborne receiver and the nature of the air operation involved may all modify ratios determined in this way.

6.2.2.5 Values of diurnal and seasonal noise in various parts of the world have been published in Report 322 of the former CCIR of the ITU.

6.2.2.5.1 Correlation of these values to actual local conditions and the derivation of required signal-to-noise ratios for effective operational use of ADF equipment is not yet fully established.

6.2.3 *Effective coverage*

6.2.3.1 Effective coverage as defined in Chapter 3, 3.4.1, is the area surrounding an NDB, within which useful information to the operator concerned can be obtained at a particular time. It is, therefore, a measure of NDB performance under prevailing conditions.

6.2.3.2 The effective coverage is limited by the ratio of the strength of the steady (non-fading) signal received from the NDB to the total noise intercepted by the ADF receiver. When this ratio falls below a limiting value, useful bearings cannot be obtained. It should also be noted that the effective coverage of an NDB may in some cases be limited to the range of the usable identification signal.

6.2.3.3 The strength of signal received from the NDB is governed by:

a) the power supplied to the antenna of the NDB;

b) the radiation efficiency of the antenna, which varies according to the height of the antenna and other characteristics of the radiating system;

c) the conductivity of the path between the NDB and the receiver, which may vary considerably as between one site and another, and is always less over land than over seawater;

d) the operating radio frequency.

6.2.3.4 The noise admitted by the receiver depends on:

a) the bandwidth of the receiver;

b) the level of atmospheric noise, which varies according to the geographical area concerned, with the time of day and the season of the year, and which may reach very high levels during local thunderstorms;

c) the level of the interference produced by other radio emissions on the same or on adjacent frequencies, which is governed to a large extent by the NDB density in the area concerned and the effectiveness of regional planning;

d) the level of noise due to electrical noise in the aircraft or to industrial noise (generated by electric motors, etc.), when the coverage of the NDB extends over industrial areas.

6.2.3.4.1 It has to be noted that the effect of noise depends on characteristics of the ADF receiver and the associated equipment, and also on the nature of the noise (e.g. steady noise, impulsive noise).

6.2.3.5 A further factor which limits the effective coverage of an NDB is present at night when interaction occurs between components of the signal which are propagated respectively in the horizontal plane (ground wave propagation) and by reflection from the ionosphere (sky wave propagation). When there is interaction between these components, which arrive at the ADF receiver with a difference of phase, bearing errors are introduced (night effect).

6.2.3.6 It will thus be seen that the effective coverage of an NDB depends on so many factors, some of which are variable, that it is impossible to specify the effective coverage of an NDB in any simple manner. The effective coverage of any NDB, in fact, varies according to the time of day and the season of the year.

6.2.3.6.1 Hence any attempt to specify an effective coverage, which would be obtainable at any time throughout the day or throughout the year, would result either in a figure for coverage which would be so small (since this would be the coverage obtained under the worst conditions of atmospheric noise, etc.) as to give quite a misleading picture of the effectiveness of the NDB, or would involve such high power and costly antenna systems (to provide the required coverage under the worst conditions), that the installation of such an NDB would usually be precluded by considerations of initial and operating costs. No specific formula can be given in determining what rated coverage would be equivalent to a desired effective coverage and the relation must be assessed regionally.

6.2.3.7 Those concerned with the operational aspects of NDB coverage will normally consider requirements in terms of a desired operational coverage and, in regional planning, it will usually be necessary to interpret such requirements in terms of a rated coverage from which may be derived the essential characteristics of the NDB required and which will also define the area to be protected against harmful interference. No specific formula can be given in determining what rated coverage would be equivalent to a desired operational coverage and the relation must be assessed regionally.

6.2.3.8 Some States have recorded data on NDBs and their effective coverage; and collection of similar information would be a practical way of obtaining an assessment of effective coverage in terms of rated coverage of facilities in a given area. This information would also be useful for future regional planning. In order to reduce the number of factors involved in assessing effective coverage, it would be desirable to establish criteria for determining the limit of useful coverage in terms of the reaction of the bearing indicator. The data referred to previously, together with measurements of actual field strength within the coverage of the NDB, would also permit determination of the effectiveness of existing installations and provide a guide to improvements that may be necessary to achieve a desired effective coverage.

6.3 Coverage of NDBs

6.3.1 *Introduction*

6.3.1.1 The following studies have been based on the latest propagation and noise data available to the ITU. They are included in this Attachment as general guidance in respect of NDB planning. Attention is called particularly to the assumptions made.

6.3.1.2 When applying the material, the validity of the assumptions in respect of the particular conditions under consideration should be carefully examined and, in particular, it should be noted that the assumed signal-to-noise ratios require considerable further study before they can be accepted as representative of the ratios limiting useful reception.

6.3.2 *Assumptions*

1. Operating frequency — 300 kHz.
   Reference is made, however, where appropriate, to frequencies of 200 kHz and 400 kHz.

2. a) Average soil conductivity:
   ($\sigma = 10^{-13}$ e.m.u.)

   b) Average seawater conductivity:
   ($\sigma = 4.10^{-11}$ e.m.u.)

3. The level of atmospheric noise (RMS) which is likely to prevail: 1) by day, 2) by night, over land masses, within the belts of latitude mentioned. [The values of expected noise have been derived from Recommendation ITU-R P.372-6 and have been taken as the average noise by day and by night during equinox periods, i.e. the values which are likely to be exceeded 20–25 per cent of the year.]

4. Input powers to the antenna of the NDB of:

   a) 5 kW
   b) 1 kW
   c) 500 W
   d) 100 W
   e) 50 W
   f) 10 W

5. The following average values of radiation efficiencies of antennas, i.e. the ratio of:

$$\left[\frac{\text{Radiated power}}{\text{Input power to antenna}}\right]$$

	Input power to antenna	*Radiation efficiency of antenna*
a)	5 kW	20% (–7 dB)
b)	5 kW	10% (–10 dB)
c)	1 kW	8% (–11 dB)
d)	500 W	5% (–13 dB)
e)	100 W	3% (–15 dB)
f)	50 W	2% (–17 dB)
g)	10 W	1% (–20 dB)
h)	10 W	0.3% (–25 dB)

i) The figure for a) is included because it is possible to realize this efficiency by the use of a more elaborate antenna system than is usually employed.

ii) The figure for h) is included because many low power NDBs use very inefficient antennas.

6. An admittance band of the ADF receiver of 6 kHz.

7. Required ratios of signal-(median) to-noise (RMS) of:

a) 15 dB by day;

b) 15 dB by night.

6.3.3 *Results of studies*

A.— *Minimum field strengths required at the boundary of the rated coverage:*

Latitude	*By day for 15 dB S/N ratio*	*By night for 15 dB S/N ratio*
5°N – 5°S	320 μV/m (+50 dB)	900 μV/m (+59 dB)
5° – 15°N&S	85 μV/m (+39 dB)	700 μV/m (+57 dB)
15° – 25°N&S	40 μV/m (+32 dB)	320 μV/m (+50 dB)
25° – 35°N&S	18★μV/m (+25 dB)	120 μV/m (+42 dB)
>35°N&S	18★μV/m (+25 dB)	50 μV/m (+35 dB)

A star shown against a figure indicates that a higher value of field strength — probably 2 or 3 times the values shown (plus 6 to plus 10 dB) — may be necessary in the presence of high aircraft noise and/or industrial noise.

B.— *Coverage of NDBs (expressed in terms of the radius of a circle, in kilometres, with the NDB at the centre) which may be expected under the assumptions made:*

1) By *day*, over *land*, and for *15 dB S/N ratio* at the boundary of the coverage:

	Input power to antenna			
	(a)	*(b)*	*(c)*	*(d)*
Latitude	*5 kW*	*5 kW*	*1 kW*	*500 W*
5°N – 5°S	320	300	170	120
5° – 15°N&S	510	470	320	250
15° – 25°N&S	>600	600	450	350
25° – 35°N&S	>600★	>600★	600★	500★
>35°N&S	>600★	>600★	>600★	500★

	Input power to antenna			
	(e)	*(f)*	*(g)*	*(h)*
Latitude	*100 W*	*50 W*	*10 W*	*10 W*
5°N – 5°S	50	30	10	<10
5° – 15°N&S	150	90	40	10
15° – 25°N&S	220	160	70	45
25° – 35°N&S	330★	250★	130★	80★
>35°N&S	330★	250★	130★	100★

2) By *night*, over *land*, and for *15 dB S/N ratio* at the boundary of the coverage:

	Input power to antenna			
	(a)	*(b)*	*(c)*	*(d)*
Latitude	*5 kW*	*5 kW*	*1 kW*	*500 W*
5°N – 5°S	190	150	85	50
5° – 15°N&S	210	180	110	70
15° – 25°N&S	320	300	170	120
25° – 35°N&S	390	390	280	200
>35°N&S	390	390	390	310

	Input power to antenna			
	(e)	*(f)*	*(g)*	*(h)*
Latitude	*100 W*	*50 W*	*10 W*	*10 W*
5°N – 5°S	20	<10	<10	<10
5° – 15°N&S	25	15	<10	<10
15° – 25°N&S	50	30	10	<10
25° – 35°N&S	100	70	25	15
>35°N&S	180	120	50	30

6.3.3.1 In all of the above tables, it has to be noted that:

a) the distances are given in kilometres, in accordance with ITU practice;

b) the figures in the final columns, with the heading 10 W, are calculated on the assumption that the low power NDB uses a very inefficient antenna (see 6.3.2, assumption 5 h));

c) a star shown against a figure indicates that the coverage may be limited by aircraft and industrial noises.

6.3.3.2 It has also to be noted that:

a) if a frequency of 200 kHz were used in place of 300 kHz, this would not appreciably affect the coverage of low power short range NDBs, but the coverage of the higher power, longer range beacons (for example, those with a range of 150 km or more) would be increased, as compared with those shown in the tables, by about 20 per cent;

b) if a frequency of 400 kHz were used in place of 300 kHz this would not appreciably affect the coverage of low power short range NDBs, but the coverage of the higher power, longer range beacons (for example, those with a range of 150 km or more) would be decreased, as compared with those shown in the tables, by about 25 per cent;

c) use of an ADF receiver with a narrower band would, other things being equal, provide wider coverage for the same radiated power of the NDB or, for the same coverage, an improved effective signal-to-noise ratio.

For example, if an admittance band of 1 kHz instead of 6 kHz were used, the coverage might be increased by as much as 30 per cent for the same radiated power or, alternatively, the effective signal-to-noise ratio might be increased by as much as 8 dB;

d) if a sector of the coverage of an NDB is over seawater, a greater coverage may be expected within that sector due to:

   1) better ground wave propagation over seawater than over land;

   2) the noise level, which is highest over land, often drops fairly steeply with increasing distance from the land. It might be assumed, therefore, that the distances shown in the tables could be increased by about 30 per cent by day, and by about 20 per cent by night, when the path is over seawater;

e) if, however, the beacon is sited on an island remote from land masses (for example, in mid-Pacific or mid-Atlantic, but not in the Caribbean), the coverage of the beacon is likely to be much greater, particularly in tropical latitudes, than is indicated in the tables; and in such cases figures for coverage similar to those shown for latitudes more than 35°N and S may be assumed for all latitudes, due to the much lower level of atmospheric noise which prevails in mid-ocean as compared with that experienced over, or in proximity to, land masses.

6.3.4 Limitation of coverage of a beacon at night due to “night effect”.

a) The distances, at night, at which the ground wave and sky wave components of the received field are likely to be equal are as follows:

Frequency	*Over land*	*Over sea*
200 kHz	500 km	550 km
300 kHz	390 km	520 km
400 kHz	310 km	500 km

b) The distances, at night, at which the ground wave component of the received field is likely to exceed the sky wave component by 10 dB are as follows:

Frequency	*Over land*	*Over sea*
200 kHz	300 km	320 km
300 kHz	230 km	300 km
400 kHz	200 km	280 km

c) It is, therefore, unlikely that reliable bearings can be obtained, at night, due to interaction of the two components of the received field, at much greater distances than those shown in 6.3.4 b). *These distances are independent of the power of the NDB.*

d) It has to be noted, moreover, that, while with overland paths of good conductivity, night effect will only be serious at somewhat greater distances than those indicated over paths of poor conductivity, night effect may become pronounced at much shorter ranges. This will also depend to some extent upon the characteristics of the radiation system.

6.4 Considerations affecting operations of NDBs

6.4.1 *Depth of modulation*

6.4.1.1 In specifying that the depth of modulation should be maintained as near to 95 per cent as is practicable, it must be noted that, at the frequencies used for NDBs, the small antennas generally in use can affect the effective modulation depth of the NDB system due to attenuation of the sidebands.

6.4.1.2 At this order of frequency, the antennas are normally only a small fraction of a wavelength long; they are therefore highly reactive and tend to have a high Q.

6.4.1.3 The effect is illustrated in Figure C-19, which was compiled from measurements made by one State. The modulating frequency in these measurements was 1 020 Hz. If a lower modulating frequency were used, the effect would be less.

6.4.1.4 In order to reduce the attenuation, attempts should be made to reduce the Q of the antenna. This can be done in two ways, by increasing either its capacity or resistance.

6.4.1.5 Inserting additional resistance in an antenna wastes power, whereas increasing the capacity does not. Additionally, the effect of increasing the capacity is to reduce the voltage across the system and hence to reduce the insulation problems.

6.4.1.6 For these reasons, it is considered desirable to increase antenna capacity by the use of a top load as, for example, in the so-called umbrella top capacity.

6.4.2 *Earth systems*

Frequency planning is done on the assumption that the field strength will be maintained at the correct value. If the earth resistance is high (i.e. an insufficient earth system), not only will the radiation efficiency be low but the power radiated will be sensitive to changes in climatic conditions and other factors affecting the earth loss. In all cases, the earth system needs to be the best possible, taking into account all local circumstances.

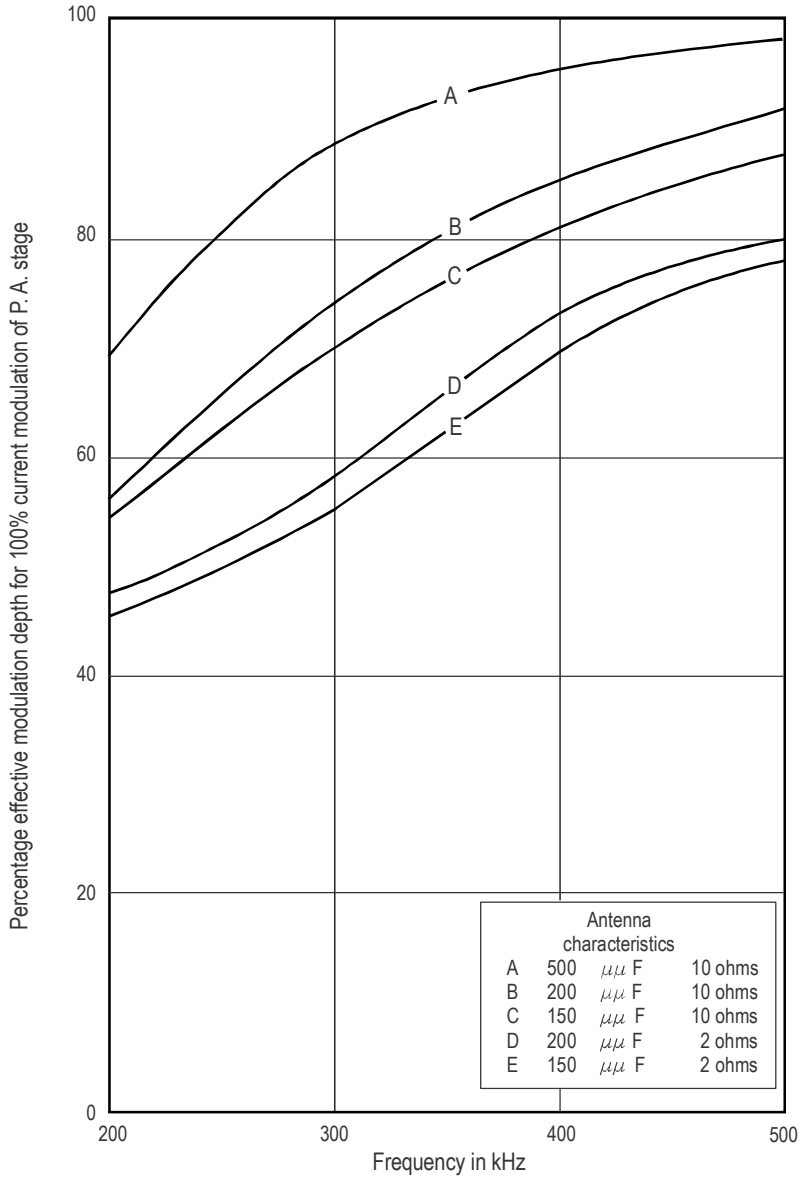

Note.— The modulating frequency in these measurements was 1 020 Hz.

Figure C-19. The effect of antenna Q on the depth of modulation of the radiated signal

6.5 Considerations affecting the choice of the modulating frequency for NON/A2A NDBs

Recognition of the fact that modern narrow band ADF receivers have improved selectivity characteristics requires consideration of the fact that, in so far as attenuation of the audio sidebands by these receivers results in a reduction of the effective depth of modulation of the signal, the distance at which satisfactory identification is obtained is consequently reduced. In such circumstances, it is considered that 400 Hz would provide a better identification service than 1 020 Hz. There is some evidence, however, that under conditions of high atmospheric noise, the higher frequency of 1 020 Hz may provide a more easily readable signal.

7. Material concerning DME

7.1 Guidance material concerning both DME/N and DME/P

7.1.1 *System efficiency*

7.1.1.1 System efficiency is the combined effect of down-link garble, ground transponder dead time, up-link garble, and interrogator signal processor efficiency. Since each of these efficiency components are statistically independent, they can be computed individually and then combined to yield the system efficiency. The effect of a single component is defined as the percentage ratio of valid replies processed by the interrogator in response to its own interrogations assuming all other components are not present. The system efficiency is then the product of the individual components.

7.1.1.2 In computing system efficiency, the number of missing replies as well as the accuracy of the range measurement made with the received replies should be considered. Missing replies may result from signal interference due to garble or from interrogations being received at the transponder during a dead time period. Replies which contain significant errors large enough to be rejected by the interrogator signal processing also should be treated as missing replies when computing the efficiency component.

7.1.1.3 The interference rate due to garble is dependent upon the channel assignment plan, traffic loading, and the ground transponder and interrogator receiver bandwidths. Because the FA mode has a wider receiver bandwidth than the IA mode, it is more susceptible to interference. These factors were accommodated in the DME/P system definition and normally do not require special consideration by the operating authority.

7.1.2 *Down-link garble*

Down-link garble occurs when valid interrogations at the ground transponder are interfered with by coincident interrogations from other aircraft and results in loss of signal or errors in time-of-arrival measurement. This undesired air-to-ground loading is a function of the number of interrogating aircraft in the vicinity of the serving transponder and the corresponding distribution of interrogation frequencies and signal amplitudes received at the transponder.

Note.— Transponder to transponder garbling is controlled by the channel assignment authorities.

7.1.3 *Up-link garble*

Up-link garble occurs when valid replies at the interrogator are interfered with by other transponders and results in loss of signal or errors in pulse time-of-arrival measurement. The garble can be interference from any transponder whose frequency is within the bandwidth of the interrogator, including those on the same frequency, but with different pulse coding. This undesired ground-to-air loading is a function of the number of transponders in the vicinity of the interrogator and the corresponding distribution of reply frequencies and signal amplitudes received at the interrogator.

7.1.4 *Interrogator processor efficiency*

The interrogator signal processor efficiency is the ratio of the number of replies processed by the interrogator to the number of interrogations in the absence of garble and transponder dead time effects. This efficiency depends on the reply pulse threshold level and the receiver noise level.

7.1.5 *Relationship between aircraft served and transmission rate*

7.1.5.1 Specification of the maximum transponder transmission rate establishes the maximum average transmitter power level. Chapter 3, 3.5.4.1.5.5 recommends that the transponder have a transmission rate capability of 2 700 pulse pairs per second if 100 aircraft are to be served. This represents typical transponder loading arising from 100 aircraft. To determine the actual transmission rate capability that should be accommodated at a given facility during peak traffic conditions requires that the maximum number of interrogators be estimated. To compute the interrogation loading on the transponder, the following should be considered:

a) the number of aircraft that constitutes the peak traffic load;

b) the number of interrogators in use on each aircraft;

c) the distribution of operating modes of the interrogators in use (e.g. search, initial approach, final approach, ground test);

d) the appropriate pulse repetition frequency as given in Chapter 3, 3.5.3.4.

7.1.5.2 Given the interrogation loading which results from the peak traffic as well as the reply efficiency of the transponder in the presence of this load, the resulting reply rate can be computed, thereby establishing the required transmitter capability. This reply rate is the level that, when exceeded, results in a reduction in receiver sensitivity (as specified in Chapter 3, 3.5.4.2.4) in order to maintain the reply rate at or below this maximum level.

7.1.6 *Siting of DME associated with ILS or MLS*

7.1.6.1 The DME should, where possible, provide to the pilot an indicated zero range at touchdown in order to satisfy current operational requirements.

7.1.6.2 The optimum site for a DME transponder is dependent upon a number of technical and operational factors. DME/N may be installed with ILS or MLS where operational requirements permit. DME/P, which provides higher accuracy and coverage throughout the entire runway region, is required to support the more flexible and advanced operations that are available with MLS.

7.1.6.3 In the case of DME/N, the provision of zero range indication may be achieved by siting the transponder as close as possible to the point at which zero range indication is required. Alternatively, the transponder time delay can be adjusted to permit aircraft interrogators to indicate zero range at a specified distance from the DME antenna. If this is done, a resulting disadvantage is that such facilities will not be usable to support performance-based navigation as described in 7.2.3. When the indicated DME zero range has a reference other than the DME antenna or the DME provides only sectorial coverage, consideration should be given to publishing this information.

7.1.6.4 In the case of DME/P, in order to meet accuracy and coverage requirements, particularly in the runway region, it is recommended that the DME/P be sited as closely as possible to the MLS azimuth facility, consistent with obstacle clearance criteria. For aircraft equipped with a full MLS capability, the desired zero range indication can then be obtained by utilizing MLS basic data. Note that the DME/P transponder time delay must not be adjusted for this purpose.

7.1.6.5 It is desirable that all users obtain indicated zero range at touchdown irrespective of the airborne equipment fitted. This would necessitate location of the DME/P abeam the runway at the touchdown point. In this case accuracy requirements for DME/P would not be met on the runway. It must be noted that MLS Basic Data Word 3 only permits the coding of DME/P coordinates within certain limits.

7.1.6.6 If an MLS/DME/P and an ILS/DME/N serve the same runway, an aircraft equipped with a minimum MLS capability can have a zero range indication at the MLS approach azimuth site when operating on MLS and a zero range indication at the touchdown point when operating on ILS. As this is considered to be operationally unacceptable, specifically from an ATC point of view, and if ILS/MLS/DME frequency tripling to prevent the relocation of the DME/N is not possible, the implementation of DME/P is to be postponed until the DME/N is withdrawn.

7.1.6.7 The nominal location of the zero range indication provided by a DME/N interrogator needs to be published.

7.1.6.8 In considering DME sites, it is also necessary to take into account technical factors such as runway length, profile, local terrain and transponder antenna height to assure adequate signal levels in the vicinity of the threshold and along the runway, and also to assure the required coverage volume (circular or sector). Care is also to be taken that where distance information is required in the runway region, the selected site is not likely to cause the interrogator to lose track due to excessive rate of change of velocity (i.e. the lateral offset of the DME antenna must be chosen with care).

7.1.7 *Geographical separation criteria*

Note.— Guidance material on DME geographical separation criteria is given in the Handbook on Radio Frequency Spectrum Requirements for Civil Aviation *(Doc 9718, Volume II), Chapter 5.*

7.1.8 *Desired to undesired (D/U) signal ratios at the airborne receiver*

Note.— Guidance material on desired to undesired (D/U) signal ratios at the airborne DME receiver is given in the Handbook on Radio Frequency Spectrum Requirements for Civil Aviation *(Doc 9718, Volume II), Chapter 5.*

7.1.9 *Special considerations for DME Y and Z channel assignments*

The channel assignment plan for DME is such that the transponder reply frequency for each Y or Z channel is the same as the interrogation frequency of another DME channel. Where the reply frequency of one DME matches the interrogation frequency of a second DME, the two transponders should be separated by a distance greater than the radio horizon distance between them. The radio horizon distance is calculated taking into account the elevations of the two transponder antennas.

7.1.10 *Special considerations for DME/P associated with ILS*

7.1.10.1 For those runways where it is intended to install DME associated with ILS and where early MLS/RNAV operations are planned, installation of DME/P is preferred.

7.1.10.2 When it is intended to use the DME/P ranging information throughout the terminal area, interrogation pulse pairs with the correct spacing and nominal frequency must trigger the transponder if the peak power density at the trans-ponder antenna is at least minus 93 dBW/m^2. This sensitivity level is based on the values contained in Chapter 3, 3.5.4.2.3.1 and it is applied to DME/P IA mode, where at this level DME/P IA mode is intended to comply with DME/N reply efficiency and at least DME/N accuracy.

7.1.11 *Considerations for the universal access transceiver (UAT*)

7.1.11.1 Frequency planning criteria to ensure compatibility between DME and the UAT are contained in Part II of the *Manual on the Universal Access Transceiver (UAT)* (Doc 9861).

7.2 Guidance material concerning DME/N only

7.2.1 *Coverage of DME/N*

7.2.1.1 Whether a particular installation can provide the required frequency, protected coverage volume can be determined by using Figure C-20. The propagation loss for paths without obstructions uses the IF-77 propagation model.

7.2.1.2 Whenever a DME that provides coverage using either a directional or bi-directional DME antenna, the antenna pattern in azimuth and elevation has to be taken into account to achieve the full benefit of the reduced separation requirements outside the antennas main lobe. The actual radiation patterns of the antennas depend on a number of factors, including height of the antenna phase centre, height of the DME counterpoise above ground level (AGL), terrain surface roughness, terrain form, site elevation above mean sea level (MSL), and conductivity of ground and counterpoise. For coverage under difficult terrain and siting conditions, it may be necessary to make appropriate increases in the equivalent isotropically radiated power (EIRP). Conversely, practical experience has shown, that under favourable siting conditions, and under the less pessimistic conditions often found in actual service, satisfactory system operation is achieved with a lower EIRP. However, to account for lowest EIRP in notches between the lobes of the real elevation antenna pattern, the values in Figure C-20 are recommended.

Note.— Further guidance may be found in the Handbook on Radio Frequency Spectrum Requirements for Civil Aviation including statement of approved ICAO policies (*Doc 9718, Volume II).*

7.2.1.3 When providing coverage to support performance-based navigation as described in the *Performance-based Navigation (PBN) Manual* (Doc 9613) and in 7.2.3, the following should be considered:

a) although aircraft approved for PBN based on DME are able to tune to a DME up to a range of 160 NM, automatic DME station tuning by aircraft generally favours more nearby stations. Thus, in airspace volumes served by many DME/N facilities, these facilities may not be used by many aircraft at extended range. Therefore, in such areas served by many DMEs (providing a high level of multi-DME position fixing redundancy), use of extended DME coverage ranges may bring little or no performance benefit, while potentially imposing restrictions on the assignment of frequencies;

b) in airspace volumes served by few DMEs, the coverage for multi-DME position fixing may be improved by the use of extended coverage ranges for individual DMEs. Due to different logic applied in various avionics implementations, the values coded in navigation database fields could unnecessarily limit the usable coverage range of DMEs for multi-DME position fixing. For example, in ARINC 424 coding the Figure of Merit (FOM), the DME Operational Service Volume (D-OSV) and the coverage field of the NAVAID class can all limit DME usable range in some avionics implementations. To avoid this, coordination with concerned aircraft operators and navigation database providers may be necessary.

7.2.2 *EIRP of DME/N facilities*

7.2.2.1 The power density figure prescribed in Chapter 3, 3.5.4.1.5.2 is based on the following example:

Airborne receiver sensitivity	–120 dBW
Transmission line loss, mismatch loss, antenna polar pattern variation with respect to an isotropic antenna	+9 dB
Power required at antenna	–111 dBW

Minus 111 dBW at the antenna corresponds to minus 89 dBW/ m^2 at the mid-band frequency.

7.2.2.2 Nominal values of the necessary EIRP to achieve a power density of minus 89 dBW/m^2 are given in Figure C-20. For coverage under difficult terrain and siting conditions it may be necessary to make appropriate increases in the EIRP. Conversely, under favourable siting conditions, the stated power density may be achieved with a lower EIRP.

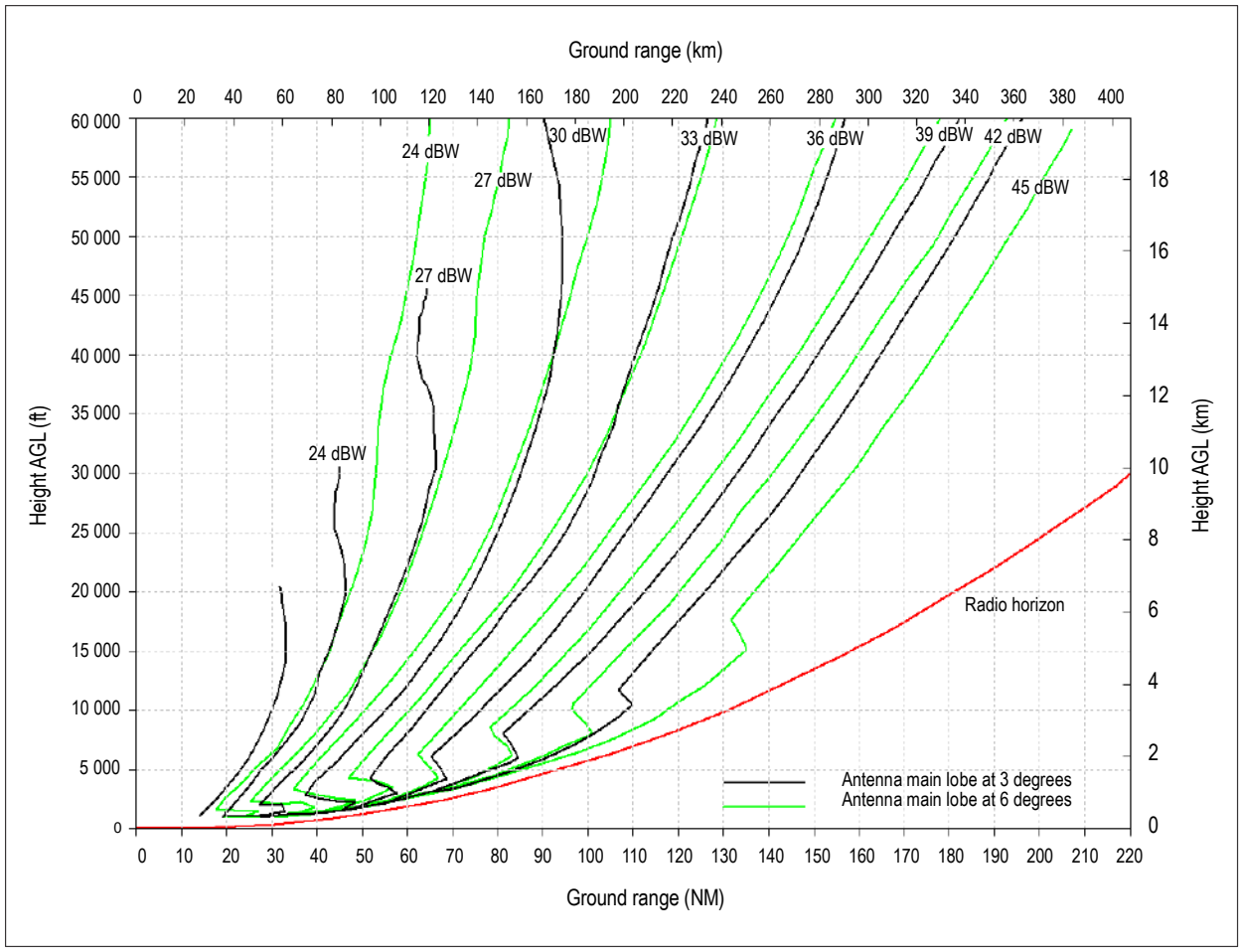

Figure C-20. Necessary EIRP to achieve a power density of –89 dBW/m² as a function of height above and distance from the DME

Note 1.— The curves are based on the IF-77 propagation model with a 4/3 Earth radius which has been confirmed by measurements.

Note 2.— The radio horizon in Figure C-20 is for a DME antenna located 5 m (17 ft) AGL over flat terrain. Terrain shielding will reduce the achievable range.

Note 3.— If the antenna is located significantly higher than the assumed reference antenna, the radio horizon and power density will increase.

7.2.3 *DME-DME RNAV*

7.2.3.1 There is an increasing use of DME to support area navigation (RNAV) operations. Although the use of DME to support RNAV operations does not impose any additional technical requirements on the DME system, it does raise some additional issues compared with the traditional use of DME with VOR to support conventional operations. These are examined briefly below.

7.2.3.2 DME/DME positioning is based on the aircraft RNAV system triangulating position from multiple DME ranges from DME facility locations in the aircraft database. The resulting accuracy of the position solution depends on the range to the DMEs and their relative geometry. Some additional measures are therefore necessary to ensure that the DME infrastructure is adequate to support the RNAV operation, i.e. that sufficient DMEs are available and that their location provides adequate geometry to meet the accuracy requirements. For approach and departure procedures, it is also necessary to confirm that there is adequate signal strength and that there are no false locks or unlocks due to multipath. When ensuring there are sufficient DMEs, it is also important to identify any critical DMEs (i.e. those which must be operational for the necessary performance to be assured).

7.2.3.3 Errors in published DME facility locations will result in RNAV position errors. It is therefore important that DME positions are correctly surveyed and that adequate procedures are in place to ensure that the location data are correctly published. For DME facilities collocated with VOR, the DME position should be separately surveyed and published if the separation distance exceeds 30 m (100 ft).

Note.— Specifications concerning data quality and publication of DME location information are contained in PANS-AIM (Doc 10066), Appendix 1.

7.2.3.4 When using DME to support RNAV, scanning DME aircraft receivers usually do not check the DME identification. As a consequence, removing the identification of a DME during tests and maintenance operations does not guarantee that the signals will not be used operationally. Maintenance actions that may provide misleading information should be minimized.

Note 1.— Further guidance on flight inspection of DME-DME RNAV procedures is given in Doc 8071.

Note 2.— Further guidance on navigation infrastructure assessment to support RNAV procedures is given in EUROCONTROL-GUID-0114 *(available at http://www.eurocontrol.int) and on the performance-based navigation (PBN) page of the ICAO website at http://www.icao.int/pbn.*

7.3 Guidance material concerning DME/P only

7.3.1 *DME/P system description*

7.3.1.1 The DME/P is an integral element of the microwave landing system described in Chapter 3, 3.11. The DME/P signal format defines two operating modes, initial approach (IA) and final approach (FA). The IA mode is compatible and interoperable with DME/N and is designed to provide improved accuracies for the initial stages of approach and landing. The FA mode provides substantially improved accuracy in the final approach area. Both modes are combined into a single DME/P ground facility and the system characteristics are such that DME/N and DME/P functions can be combined in a single interrogator. The IA and FA modes are identified by pulse codes which are specified in Chapter 3, 3.5.4.4. In the MLS approach sector, the DME/P coverage is at least 41 km (22 NM) from the ground transponder. It is intended that the interrogator does not operate in the FA mode at ranges greater than 13 km (7 NM) from the transponder site, although the transition from the IA mode may begin at 15 km (8 NM) from the transponder. These figures were selected on the assumption that the transponder is installed beyond the stop end of the runway at a distance of approximately 3 600 m (2 NM) from the threshold.

7.3.1.2 A major potential cause of accuracy degradation encountered in the final phases of the approach and landing operation is multipath (signal reflection) interference. DME/P FA mode minimizes these effects by using wideband signal processing of pulses having fast rise time leading edges, and by measuring the time of arrival at a low point on the received pulse where it has not been significantly corrupted by multipath. This is in contrast to the slower rise time pulses and higher thresholding at the 50 per cent level used in DME/N.

7.3.1.3 Because the FA mode is used at ranges less than 13 km (7 NM), the transmitter can provide an adequate signal level to meet the required accuracy without the fast rise time pulse violating the transponder pulse spectrum requirements. Use of the 50 per cent threshold and a narrow receiver bandwidth in the IA mode permits an adequate but less demanding performance to the coverage limits. The transponder determines the interrogation mode in use by the interrogation code in order to time the reply delay from the proper measurement reference. The IA mode is interoperable with DME/N permitting a DME/N interrogator to be used with a DME/P transponder to obtain at least the accuracy with a DME/N transponder. Similarly, a DME/P interrogator may be used with a DME/N transponder.

7.3.2 *DME/P system accuracy requirements*

7.3.2.1 *DME/P accuracy requirements*

7.3.2.1.1 When considering the DME/P accuracy requirement, the operations that can be performed in the service volume of the final approach mode tend to fall into one of two groups. This has led to two accuracy standards being defined for the final approach mode:

a) *accuracy standard 1:* this is the least demanding and is designed to cater for most CTOL operations;

b) *accuracy standard 2:* this gives improved accuracy that may be necessary for VTOL and STOL operations, CTOL flare manoeuvres using MLS flare elevation guidance and CTOL high-speed turnoffs.

7.3.2.1.2 Table C-4 shows applications of DME and typical accuracy requirements. This will assist in selecting the appropriate accuracy standard to meet the operational requirement. The calculations are based on a distance of 1 768 m (5 800 ft) between the DME antenna and the runway threshold. The following paragraphs refer to Table C-4.

7.3.2.1.3 It is intended that the DME/P accuracy approximately corresponds to the azimuth function PFE at a distance of 37 km (20 NM) from the MLS reference datum both along the extended runway centre line and at an azimuth angle of 40 degrees. The CMN is the linear equivalent of the plus or minus 0.1 degree CMN specified for the azimuth angle function.

7.3.2.1.4 PFE corresponds to azimuth angular error; CMN is approximately the linear equivalent of the plus or minus 0.1 degree CMN specified for the azimuth angle system.

7.3.2.1.5 The plus or minus 30 m (100 ft) PFE corresponds to a plus or minus 1.5 m (5 ft) vertical error for a 3-degree elevation angle.

7.3.2.1.6 Flare initiation begins in the vicinity of the MLS approach reference datum; MLS elevation and DME/P provide vertical guidance for automatic landing when the terrain in front of the runway threshold is uneven.

7.3.2.1.7 Sensitivity modification or autopilot gain scheduling requirements are not strongly dependent on accuracy.

Table C-4.

Function	Typical distance from the threshold	PFE (95% probability)	CMN (95% probability)
Approach (7.3.2.1.3)			
— extended runway centre line	37 km (20 NM)	±250 m (±820 ft)	±68 m (±223 ft)
— at 40° azimuth	37 km (20 NM)	±375 m (±1 230 ft)	±68 m (±223 ft)
Approach (7.3.2.1.4)			
— extended runway centre line	9 km (5 NM)	±85 m (±279 ft)	±34 m (±111 ft)
— at 40° azimuth	9 km (5 NM)	±127 m (±417 ft)	±34 m (±111 ft)
Marker replacement			
— outer marker	9 km (5 NM)	±800 m (±2 625 ft)	not applicable
— middle marker	1 060 m (0.57 NM)	±400 m (±1 312 ft)	not applicable
30 m decision height determination (100 ft) (7.3.2.1.5)	556 m (0.3 NM)	±30 m (±100 ft)	not applicable
— 3° glide path (CTOL)	556 m (0.3 NM)	±15 m (±50 ft)	not applicable
— 6° glide path (STOL)			
Flare initiation over uneven terrain (7.3.2.1.6)			
— 3° glide path (CTOL)	0	±30 m (±100 ft)	±18 m (±60 ft)
— 6° glide path (STOL)	0	±12 m (±40 ft)	±12 m (±40 ft)
Sensitivity modifications (7.3.2.1.7) (autopilot gain scheduling)	37 km (20 NM) to 0	±250 m (±820 ft)	not applicable
Flare manoeuvre with MLS flare elevation (7.3.2.1.8)			
— CTOL	0	±30 m (±100 ft)	±12 m (±40 ft)
— STOL	0	±12 m (±40 ft)	±12 m (±40 ft)
Long flare alert (7.3.2.1.9)	Runway region	±30 m (±100 ft)	not applicable
CTOL high speed roll-out/turnoffs (7.3.2.1.10)	Runway region	±12 m (±40 ft)	±30 m (±100 ft)
Departure climb and missed approach	0 to 9 km (5 NM)	±100 m (±328 ft)	±68 m (±223 ft)
VTOL approaches (7.3.2.1.11)	925 m (0.5 NM) to 0	±12 m (±40 ft)	±12 m (±40 ft)
Coordinate translations (7.3.2.1.12)	—	±12 m to ±30 m (±40 ft to ±100 ft)	±12 m (±40 ft)

7.3.2.1.8 It is intended that this specification applies when vertical guidance and sink rate for automatic landing are derived from the MLS flare elevation and the DME/P.

Note.— Although the standard has been developed to provide for MLS flare elevation function, this function is not implemented and is not intended for future implementation.

7.3.2.1.9 It indicates to the pilot if the aircraft is landing beyond the touchdown region.

7.3.2.1.10 The roll-out accuracy requirement reflects system growth potential. In this application the roll-out PFE would be dictated by the possible need to optimize roll-out deceleration and turnoff so as to decrease runway utilization time.

7.3.2.1.11 It is intended to assure the pilot that the aircraft is over the landing pad before descending.

7.3.2.1.12 It may be desirable to translate the MLS coordinates from one origin to another when the antennas are not installed in accordance with Chapter 3, 3.11.5.2.6 or 3.11.5.3.5. The figures in the table are typical of a VTOL application; actual values will depend on the geometry of the installation.

7.3.3 *DME/P error budgets*

Example error budgets for DME/P accuracy standards 1 and 2 are shown in Table C-5. If the specified error components are not individually exceeded in practice, it can be expected that the overall system performance, as specified in Chapter 3, 3.5.3.1.4, will be achieved. A garbling contribution to the system error is computed by taking the root sum square (RSS) of the errors obtained in the specified down-link environment with those obtained in the specified up-link environment and removing, on an RSS basis, the error obtained in a non-garbling environment.

Table C-5. Example of DME/P error budget

		FA mode Standard 1		FA mode Standard 2		IA mode	
Error source	Error component	PFE m (ft)	CMN m (ft)	PFE m (ft)	CMN m (ft)	PFE m (ft)	CMN m (ft)
Instrumentation	Transponder	±10 (±33)	±8 (±26)	±5 (±16)	±5 (±16)	±15 (±50)	±10 (±33)
	Interrogator	±15 (±50)	±10 (±33)	±7 (±23)	±7 (±23)	±30 (±100)	±15 (±50)
Site related	Down-link specular multipath	±10 (±33)	±8 (±26)	±3 (±10)	±3 (±10)	±37 (±121)	±20 (±66)
	Up-link specular multipath	±10 (±33)	±8 (±26)	±3 (±10)	±3 (±10)	±37 (±121)	±20 (±66)
	Non-specular (diffuse) multipath	±3 (±10)	±3 (±10)	±3 (±10)	±3 (±10)	±3 (±10)	±3 (±10)
	Garble	±6 (±20)	±6 (±20)	±6 (±20)	±6 (±20)	±6 (±20)	±6 (±20)

Note 1.— The figures for "non-specular multipath" and for "garble" are the totals of the up-link and down-link components.

Note 2.— PFE contains both bias and time varying components. In the above table the time varying components and most site related errors are assumed to be essentially statistically independent. The bias components may not conform to any particular statistical distribution.

In considering these error budgets, caution is to be exercised when combining the individual components in any particular mathematical manner.

Note 3.— The transmitter wave form is assumed to have a 1 200 nanosecond rise time.

7.3.4 *System implementation*

7.3.4.1 While the DME/P may be implemented in various ways, the instrumental and propagation errors assumed are typical of those obtainable with equipment designs which provide internal time delay drift compensation and which establish timing reference points by thresholding on the leading edge of the first pulse of a pulse pair using the following techniques:

a) *IA mode.* A conventional technique which thresholds at the 50 per cent amplitude point;

b) *FA mode.* A delay-attenuate-and-compare (DAC) technique which thresholds between the 5 per cent and 30 per cent amplitude points.

7.3.4.2 Accuracy standard 1 can be achieved using a delay of 100 nanoseconds and an attenuation of 5 to 6 dB. It is also required that the threshold amplitude point of both the delayed pulse and the attenuated pulse lie within the partial rise time region.

7.3.4.3 The example above does not preclude time of arrival measurement techniques other than the DAC from being used, but it is necessary in any case that threshold measurements take place during the pulse partial rise time.

7.3.5 *DME/P interrogator signal processing*

7.3.5.1 *During acquisition*

a) The interrogator acquires and validates the signal within 2 seconds before transitioning to track mode even in the presence of squitter and random pulse pairs from adjacent channels, which result in a 50 per cent system efficiency.

b) After loss of the acquired signal in either the IA or FA mode, the interrogator provides a warning output within 1 second, during which time the guidance information continues to be displayed. After loss of signal, the interrogator returns to the search condition in the IA mode in order to re-establish track.

7.3.5.2 *During track*

When track is established, the receiver output consists of valid guidance information before removing the warning. The validation process continues to operate as long as the interrogator is in track. The interrogator remains in track as long as the system efficiency is 50 per cent or greater. While in track, the receiver provides protection against short duration, large amplitude erroneous signals.

7.3.5.3 *Range date filter*

The accuracy specifications in Chapter 3, 3.5.3.1.4, as well as the error budgets discussed in 7.3.3, assume that the higher frequency noise contributions are limited by a low pass filter with a corner frequency of qw as specified in Figure C-21. Depending upon the user's application, additional filtering for noise reduction can be used provided that the induced phase delay and amplitude variation do not adversely affect the aircraft flight control system's dynamic response. The following sections recommend additional features which should be incorporated into the data filter.

7.3.5.4 *Velocity memory*

The data filter may require a velocity memory in order to achieve the specified accuracies in Chapter 3, 3.5.3.1.4 with a system efficiency of 50 per cent. It should be noted that low system efficiencies can occur in the IA mode during identification transmissions.

7.3.5.5 *Outlier rejection*

Range estimates which are significantly different from previous filtered range estimates, because they cannot be the result of aircraft motion, should be assumed to be in error. Such data should be rejected at the input to the data filter.

7.3.6 *DME/P error measurement methods*

7.3.6.1 *System errors*

7.3.6.1.1 The DME/P system accuracies are specified in Chapter 3, 3.5.4.1.4 in terms of path following error (PFE) and control motion noise (CMN). These parameters describe the interaction of the DME/P guidance signal with the aircraft in terms directly related to aircraft position errors and flight control system design.

7.3.6.1.2 For the purposes of determining compliance with the accuracy standard, the PFE and CMN components are evaluated over any T second interval (where T = 40 seconds in the IA mode and 10 seconds in the FA mode) of the flight error record taken within the DME/P coverage limits. The 95 per cent probability requirement is interpreted to be satisfied if the PFE and CMN components do not exceed the specified error limits for a total period that is more than 5 per cent of the evaluation time interval. This is illustrated in Figure C-21. To evaluate the PFE and CMN components of the DME/P guidance data, the true aircraft position, as determined by a suitable position reference, is subtracted from the guidance data to form an error signal. This error signal is then filtered by the PFE and CMN filters, where the outputs provide suitable estimates of the PFE and CMN components, respectively. These filters are defined in Figure C-21.

7.3.6.1.3 These filters can be utilized to determine the transponder instrumentation error components specified in Chapter 3, 3.5.4.5.3 and 3.5.4.5.4. Similarly, the interrogator instrumentation error components, specified in Chapter 3, 3.5.5.4, can be determined.

7.3.7 *Multipath effects*

7.3.7.1 Under the multipath conditions likely to exist, the accuracy specifications of the DME/P assume that the performance is not degraded beyond a certain limit and that this degradation is equally applied to both interrogator and transponder receiver.

7.3.7.2 To ensure that the equipment is working according to the specifications, the following should apply to FA mode operation of the system:

a) if a signal of sufficient power to make thermal noise contributions insignificant is applied to the receivers, a second signal delayed between 0 and 350 nanoseconds with respect to the first, with an amplitude 3 dB or more below the first and with a scalloping frequency between 0.05 and 200 Hz should not produce errors in the receiver output of more than plus or minus 100 nanoseconds (15 m);

b) for delays more than 350 nanoseconds the error contribution will be reduced considerably. A typical value will be plus or minus 7 nanoseconds (1 m).

7.3.7.3 The airborne DME antenna should be located so as to preclude antenna gain reductions in the forward direction with the aircraft in the landing configuration. Any such antenna gain reductions could enhance the multipath error component when the aircraft is on approach and landing phases when highest DME accuracies are required.

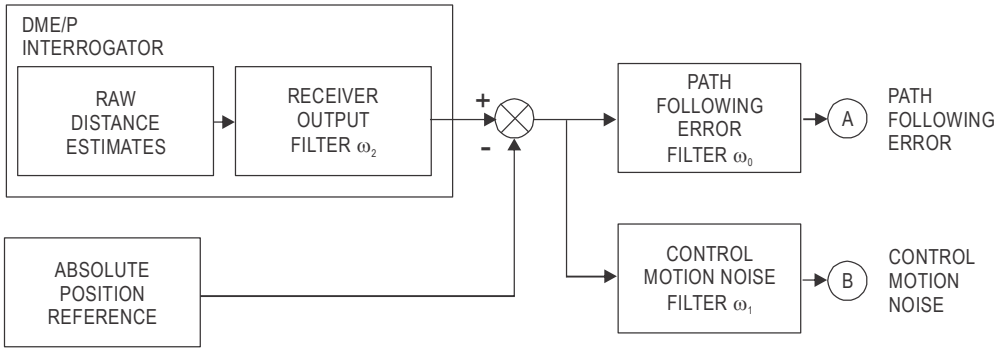

GUIDANCE FUNCTION	CORNER FREQUENCIES (RADIANS/SEC)		
	ω_0	ω_1	ω_2*
DME/P	1.5	0.5	10

RECEIVER OUTPUT FILTER $\frac{\omega_2}{S + \omega_2}$

PATH FOLLOWING FILTER $\frac{\omega_n^2}{S^2 + 2\zeta\omega_n S + \omega_n^2}$ $\zeta = 1;\ \omega_0 = .64\ \omega_n$

CONTROL MOTION NOISE FILTER $\frac{S}{S + \omega_1}$

* This corner frequency may be less than 10 rad/sec for some applications.

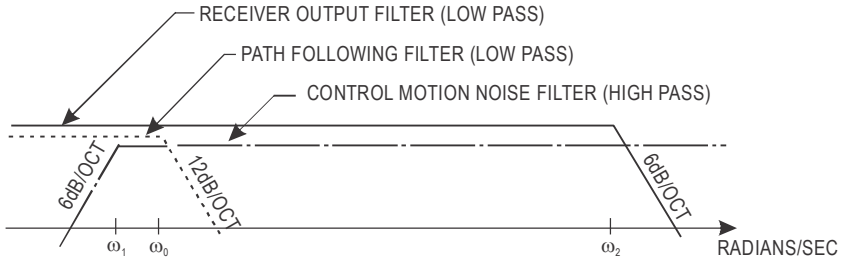

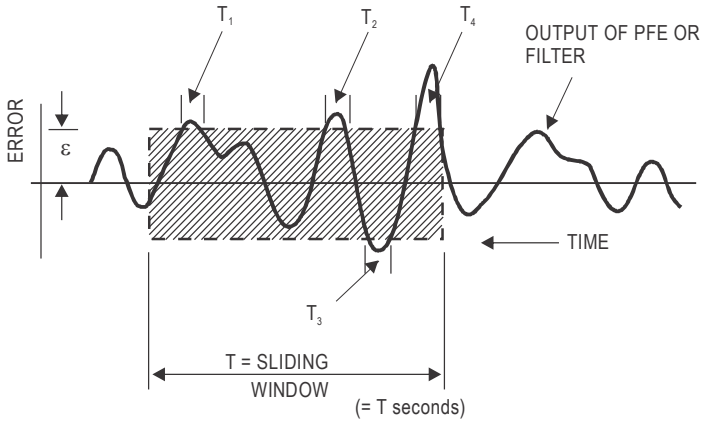

	IA MODE	FA MODE
T	40 sec	10 sec

DME/P measurement methodology: is the error specification; T region to be evaluated; T_1, T_2, T_3 ... time intervals that error exceeds specifications. For the equipment to be acceptable in this region, the following inequality should be true: $(T_1 + T_2 + T_3 + ...) / T \leq 0.05$.

Figure C-21.

7.3.8 *DME/P power budget*

7.3.8.1 Tables C-6 and C-7 are an example of CTOL air-to-ground and ground-to-air power budgets. The permitted peak ERP value is based on a pulse shape which meets the spectral constraints in Chapter 3, 3.5.4.1.3 e).

Table C-6. CTOL ground-to-air power budget

Power budget items	41 km (22 NM)	13 km (7 NM)	Ref. datum	Roll-out
Peak effective radiated power, dBm	55	55	55	55
Ground multipath loss, dB	–5	–3	–4	–17
Antenna pattern loss, dB	–4	–2	–5	–5
Path loss, dB	–125	–115	–107	–103
Monitor loss, dB	–1	–1	–1	–1
Polarization and rain loss, dB	–1	–1	0	0
Received signal at aircraft, dBm	–81	–67	–62	–71
Power density at aircraft, dBW/m^2	–89	–75	–70	–79
Aircraft antenna gain, dB	0	0	0	0
Aircraft cable loss, dB	–4	–4	–4	–4
Received signal at interrogator, dBm	–85	–71	–66	–75
Receiver noise video, dBm (Noise factor (NF) = 9 dB) IF BW: 3.5 MHz IF BW: 0.8 MHz	 –109	 –103	 –103	 –103
Signal-to-noise ratio (video), dB	24	32	37	28

Table C-7. CTOL air-to-ground power budget

Power budget items	41 km (22 NM)	13 km (7 NM)	Ref. datum	Roll-out
Interrogator transmitter power, dBm	57	57	57	57
Aircraft antenna gain, dB	0	0	0	0
Aircraft cable loss, dB	–4	–4	–4	–4
Peak effective radiated power, dBm	53	53	53	53
Ground multipath loss, dB	–5	–3	–4	–17
Path loss, dB	–125	–115	–107	–103
Polarization and rain loss, dB	–1	–1	0	0
Received signal at transponder antenna, dBm	–78	–66	–58	–67
Ground antenna gain, dB	8	8	8	8
Pattern loss, dB	–4	–2	–5	–5
Cable loss, dB	–3	–3	–3	–3
Received signal at transponder, dBm	–77	–63	–58	–67
Receiver noise video, dBm (Noise factor (NF) = 9 dB) IF BW: 3.5 MHz		–106	–106	–106
IF BW: 0.8 MHz	–112			
Signal-to-noise ratio (video), dB	35	43	48	39

7.3.8.2 In the power budget calculations, it is assumed that the aircraft antenna is not shielded by the aircraft structure including the landing gear when extended.

7.3.8.3 The video power signal-to-noise ratio is related to the IF power signal-to-noise ratio in the following manner:

$$\text{S/N (video)} = \text{S/N (IF)} + 10 \log \frac{\text{IF noise bandwidth}}{\text{video noise bandwidth}}$$

Note 1.— The distances are measured from the transponder antenna.

Note 2.— Frequency dependent parameters were calculated for 1 088 MHz.

7.3.9 *DME/P monitor time delay measurement*

The required time delay measurement can be accomplished by measuring the output of a PFE filter and making a control decision within 1 second. However, since the transponder PFE is a slowly varying error component, an equivalent measurement is to average the unfiltered time delay samples for 1 second.

8. Material concerning power supply switch-over times

8.1 Power supply switch-over times for ground-based radio aids used in the vicinity of aerodromes

The power supply switch-over times for radio navigation aids and ground elements of communications systems are dependent on the type of runway and aircraft operations to be supported. Table C-8 indicates representative switch-over times which may be met by power supply systems currently available.

Table C-8. Power supply switch-over times for ground-based radio aids used at aerodromes

Type of runway	Aids requiring power	Maximum switch-over times (seconds)
Instrument approach	SRE	15
	VOR	15
	NDB	15
	D/F facility	15
Precision approach, Category I	ILS localizer	10
	ILS glide path	10
	ILS middle marker	10
	ILS outer marker	10
	PAR	10
Precision approach, Category II	ILS localizer	0
	ILS glide path	0
	ILS inner marker	1
	ILS middle marker	1
	ILS outer marker	10
Precision approach, Category III	(same as Category II)	

ATTACHMENT D. INFORMATION AND MATERIAL FOR GUIDANCE IN THE APPLICATION OF THE GNSS STANDARDS AND RECOMMENDED PRACTICES

1. DEFINITIONS

Bi-binary. Bi-binary is known as “Manchester Encoding”. It is sometimes referred to as “Differential Manchester Encoding”. Using this system, it is the transition of the edge that determines the bit.

Chip. A single digital bit of the output of a pseudo-random bit sequence.

Gold code. A class of unique codes used by GPS, which exhibit bounded cross-correlation and off-peak auto-correlation values.

Selective availability (SA). A set of techniques for denying the full accuracy and selecting the level of positioning, velocity and time accuracy of GPS available to users of the standard positioning service signal.

Note.— GPS SA was discontinued at midnight on 1 May 2000.

2. GENERAL

Standards and Recommended Practices for GNSS contain provisions for the elements identified in Chapter 3, 3.7.2.2. Additional implementation guidance is provided in the *Global Navigation Satellite System (GNSS) Manual* (Doc 9849).

Note.— Except where specifically annotated, GBAS guidance material applies to GRAS.

3. NAVIGATION SYSTEM PERFORMANCE REQUIREMENTS

3.1 Introduction

3.1.1 Navigation system performance requirements are defined in the *Performance-based Navigation (PBN) Manual* (Doc 9613) for a single aircraft and for the total system which includes the signal-in-space, the airborne equipment and the ability of the aircraft to fly the desired trajectory. These total system requirements were used as a starting point to derive GNSS signal-in-space performance requirements. In the case of GNSS, degraded configurations which may affect multiple aircraft are to be considered. Therefore, certain signal-in-space performance requirements are more stringent to take into account multiple aircraft use of the system.

3.1.2 Two types of approach and landing operations with vertical guidance (APV), APV-I and APV-II, use vertical guidance relative to a glide path, but the facility or navigation system may not satisfy all of the requirements associated with precision approach. These operations combine the lateral performance equal to that of a Facility Performance Category I localizer with different levels of vertical guidance. Both APV-I and APV-II provide access benefits relative to a non-precision

approach, and the service that is provided depends on the operational requirements and the SBAS infrastructure. APV-I and APV-II exceed the requirements (lateral and vertical) for current RNAV approaches using barometric altimetry, and the relevant on-board equipment will therefore be suitable for the conduct of barometric VNAV APV and RNAV non-precision approaches.

3.2 Accuracy

3.2.1 GNSS position error is the difference between the estimated position and the actual position. For an estimated position at a specific location, the probability should be at least 95 per cent that the position error is within the accuracy requirement.

3.2.2 Stationary, ground-based systems such as VOR and ILS have relatively repeatable error characteristics, so that performance can be measured for a short period of time (e.g. during flight inspection) and it is assumed that the system accuracy does not change after the test. However, GNSS errors change over time. The orbiting of satellites and the error characteristics of GNSS result in position errors that can change over a period of hours. In addition, the accuracy itself (the error bound with 95 per cent probability) changes due to different satellite geometries. Since it is not possible to continually measure system accuracy, the implementation of GNSS demands increased reliance on analysis and characterization of errors. Assessment based on measurements within a sliding time window is not suitable for GNSS.

3.2.3 The error for many GNSS architectures changes slowly over time, due to filtering in the augmentation systems and in the user receiver. This results in a small number of independent samples in periods of several minutes. This issue is very important for precision approach applications, because it implies that there is a 5 per cent probability that the position error can exceed the required accuracy for an entire approach. However, due to the changing accuracy described in 3.2.2, this probability is usually much lower.

3.2.4 The 95 per cent accuracy requirement is defined to ensure pilot acceptance, since it represents the errors that will typically be experienced. The GNSS accuracy requirement is to be met for the worst-case geometry under which the system is declared to be available. Statistical or probabilistic credit is not taken for the underlying probability of particular ranging signal geometry.

3.2.5 Therefore, GNSS accuracy is specified as a probability for each and every sample, rather than as a percentage of samples in a particular measurement interval. For a large set of independent samples, at least 95 per cent of the samples should be within the accuracy requirements in Chapter 3, Table 3.7.2.4-1. Data is scaled to the worst-case geometry in order to eliminate the variability in system accuracy that is caused by the geometry of the orbiting satellites.

3.2.6 An example of how this concept can be applied is the use of GPS to support performance required for non-precision approach operations. Assume that the system is intended to support non-precision approaches when the horizontal dilution of precision (HDOP) is less than or equal to 6. To demonstrate this performance, samples should be taken over a long period of time (e.g. 24 hours). The measured position error g for each sample i is denoted g_i. This error is scaled to the worst-case geometry as $6 \times g_i/\text{HDOP}$. Ninety-five per cent of the scaled errors must be less than 220 m for the system to comply with the non-precision accuracy requirement under worst-case geometry conditions. The total number of samples collected must be sufficient for the result to be statistically representative, taking into account the decorrelation time of the errors.

3.2.7 A range of vertical accuracy values is specified for Category I precision approach operations which bounds the different values that may support an equivalent operation to ILS. A number of values have been derived by different groups, using different interpretations of the ILS standards. The lowest value from these derivations was adopted as a conservative value for GNSS; this is the minimum value given for the range. Because this value is conservative, and because GNSS error characteristics are different from ILS, it may be possible to achieve Category I operations using larger values of accuracy within the range. The larger values would result in increased availability for the operation. The maximum value in the range has been proposed as a suitable value, subject to validation.

3.2.7.1 Requirements for position domain accuracy to support precision approach operations below Category I are not defined in the SARPs. GBAS service types intended to support operations with lower than Category I minima are required to meet the SIS accuracy requirements for Category I at a minimum. In addition, specific pseudo-range accuracy requirements apply to support the assessment of adequate performance during aircraft certification. The additional requirements on pseudo-range accuracy may be combined with geometry screening to ensure the resulting position domain accuracy is adequate for a given aeroplane design to achieve suitable landing performance. See 7.5.13.

3.2.8 The GPS SPS position error (Chapter 3, 3.7.3.1.1.1.1) accounts for the contribution of the space and control segment to position errors (satellite clock and ephemeris errors) only; it does not include the contributions of ionospheric and tropospheric delay model errors, errors due to multipath effects, and receiver measurement noise errors (see 4.1.2). These errors are addressed in the receiver standards. The user positioning error at the output of ABAS-capable equipment is mainly driven by the GNSS receiver used.

3.2.8.1 For Basic GNSS receivers, the receiver qualification standards require demonstration of user positioning accuracy in the presence of interference and a model of selective availability (SA) to be less than 100 m (95 per cent of time) horizontally and 156 m (95 per cent of time) vertically. The receiver standards do not require that a Basic GNSS receiver applies the ionospheric correction described in Appendix B, 3.1.1.2.1.4.

Note.— The term "Basic GNSS receiver" designates the GNSS avionics that at least meet the requirements for a GPS receiver as outlined in Annex 10, Volume I and the specifications of RTCA/DO-208 as amended by United States Federal Aviation Administration (FAA) TSO-C129A, or EUROCAE ED-72A (or equivalent).

3.2.8.2 Since the discontinuation of SA, the representative user positioning accuracy of GPS has been conservatively estimated to be as shown in Table D-1. The numbers provided assume that the worst two satellites of a nominal 24 GPS satellite constellation are out of service. In addition, a 7 m (1 σ) ionospheric delay model error, a 0.25 m (1 σ) residual tropospheric delay error, and a 0.80 m (1 σ) receiver noise error are assumed. After discontinuation of SA (see section 1.), the dominant pseudo-range error for users of the GPS Standard Positioning Service is the ionospheric error that remains after application of the ionospheric corrections. This error is also highly variable and depends on conditions such as user geomagnetic latitude, level of solar activity (i.e. point of the solar cycle that applies), level of ionospheric activity (i.e. whether there is a magnetic storm, or not), elevation angle of the pseudo-range measurement, season of the year, and time of day. The ionospheric delay model error assumption reflected in Table D-1 is generally conservative; however, conditions can be found under which the assumed 7 m (1 σ) error during solar maximum would be inadequate.

Table D-1. GPS user positioning accuracy

	GPS user positioning accuracy 95% of time, global average
Horizontal position error	33 m (108 ft)
Vertical position error	73 m (240 ft)

3.2.9 SBAS and GBAS receivers will be more accurate, and their accuracy will be characterized in real time by the receiver using standard error models, as described in Chapter 3, 3.5, for SBAS and Chapter 3, 3.6, for GBAS.

Note 1.— The term "SBAS receiver" designates the GNSS avionics that at least meet the requirements for an SBAS receiver as outlined in Annex 10, Volume I and the specifications of RTCA/DO-229D with Change 1 (or equivalent) or the specification of the EUROCAE/ED-259 (or equivalent).

Note 2.— The term "GBAS receiver" designates the GNSS avionics that at least meet the requirements for a GBAS receiver as outlined in Annex 10, Volume I and the specifications of the RTCA documents covering the applicable performance types, amended by United States FAA TSO (or equivalent).

3.3 Integrity

3.3.1 Integrity is a measure of the trust that can be placed in the correctness of the information supplied by the total system. Integrity includes the ability of a system to provide timely and valid warnings to the user (alerts) when the system must not be used for the intended operation (or phase of flight).

3.3.2 To ensure that the position error is acceptable, an alert limit is defined that represents the largest position error allowable for a safe operation. The position error cannot exceed this alert limit without annunciation. This is analogous to ILS in that the system can degrade so that the error is larger than the 95th percentile but within the monitor limit.

3.3.3 The integrity requirement of the navigation system for a single aircraft to support en-route, terminal, initial approach, non-precision approach and departure is assumed to be $1 - 1 \times 10^{-5}$ per hour.

3.3.4 For satellite-based navigation systems, the signal-in-space in the en-route environment simultaneously serves a large number of aircraft over a large area, and the impact of a system integrity failure on the air traffic management system will be greater than with traditional navigation aids. The performance requirements in Chapter 3, Table 3.7.2.4-1, are therefore more demanding.

3.3.5 For APV and precision approach operations, integrity requirements for GNSS signal in space requirements of Chapter 3, Table 3.7.2.4-1, were selected to be consistent with ILS requirements.

3.3.6 Alert limits for typical operations are provided in Note 2 to Table 3.7.2.4-1. A range of vertical alert limits (VAL) from 10 m (33 ft) to 35 m (115 ft) is specified for Category I precision approach operations, reflecting potential differences in system design that may affect the operation. The derivation of the range values is explained in 3.3.7 and 3.3.8. When using a VAL greater than 10 m (33 ft), a system-specific analysis must determine which value in the 10 m (33 ft) to 35 m (115 ft) range is appropriate to ensure suitable guidance quality. The analysis must take into account the system monitor design and other factors relevant to system implementation (i.e. additional mechanisms which prevent exposure to significant vertical biases). In the case of SBAS, this analysis is normally done by the augmentation system service provider, supported by the system designer and accepted by the appropriate safety oversight authority. Additionally, regardless of the VAL used, local implementation- and procedure-specific safety cases are normally conducted separately from the system-specific safety case. These are conducted by the local air navigation service provider, taking into account information provided by the augmentation system service provider (see 3.3.9 and 3.3.10).

3.3.7 The range of values for VAL reflects the different characteristics of GNSS integrity monitoring as compared to ILS integrity monitoring. In ILS, monitor thresholds for key signal parameters are standardized, and the monitors themselves have very low measurement uncertainty on the parameter that is being monitored. With differential GNSS, some system monitors have comparably large measurement uncertainty whose impact must be considered on the intended operation. In all cases, the effect of the alert limit is to restrict the satellite-user geometry to one where the monitor performance (typically in the pseudo-range domain) is acceptable when translated into the position domain. The smallest (most stringent) precision approach vertical alert limit (VAL) value (10 m (33 ft)) was derived based on the monitor performance of ILS as it could affect the glide slope at a nominal decision altitude of 60 m (200 ft) above the runway threshold, without taking into account the specific characteristics of GNSS integrity monitoring which could potentially enable the use of a less stringent VAL. By applying the 10 m (33 ft) VAL, the GNSS error, under faulted conditions, can be directly compared to an ILS error under faulted conditions, such that the GNSS errors are less than or equal to the ILS errors. For those faulted conditions with comparably large measurement uncertainty in GNSS, this results in monitor thresholds which are more stringent than ILS. When using a 10 m (33 ft) VAL no further analysis of navigation system error distribution is required.

3.3.8 The largest precision approach VAL value (35 m (115 ft)) was derived to ensure obstacle clearance equivalent to ILS for those error conditions which can be modelled as a bias during the final approach, taking into account that the aircraft decision altitude is independently derived from barometric pressure. An assessment has been conducted of the worst-case effect of a latent bias error equal to the alert limit of 35 m (115 ft), concluding that adequate obstacle clearance protection is provided on the approach and missed approach (considering the decision altitude would be reached early or late, using an independent barometric altimeter). It is important to recognize that this assessment only addressed obstacle clearance and is limited to those

error conditions which can be modelled as bias errors. Analysis has shown 35 m (115 ft) bias high and low conditions can be tolerated up to the approach speed category (Categories A through D) glide path angle limits in the *Procedures for Air Navigation Services — Aircraft Operations* (PANS-OPS, Doc 8168) without impinging on the ILS obstacle clearance surfaces during the instrument segment of the approach. However, it is important to note that GNSS systems using a VAL greater than 10 m (33 ft) will not produce sustained bias errors of such magnitude. Instead, the increased VAL is used in conjunction with additional system monitors to produce guidance quality equivalent to or better than ILS. When using a VAL greater than 10 m (33 ft), additional characterization of navigation system error distribution is required to ensure that position errors, in both the instrument and visual segments of the approach, are sufficiently small to ensure obstacle clearance and acceptable touchdown performance.

3.3.9 When conducting the system-specific safety assessment to support the use of a VAL greater than 10 m (33 ft), the factors discussed below should be considered.

3.3.9.1 When a visual contact with approach/runway lighting or marking is established and the pilot takes a decision to land, the instrument phase ends and the flight continues with a visual reference. In the presence of a vertical navigation system error (VNSE), pilots may not be able to recognize a navigation error during the transition from the instrument to the visual segment. As a consequence of the VNSE, the decision altitude may be reached either above or below the nominal flight path, such that there might be a necessity to manually align the aircraft with reference to visual cues in order to cross the runway threshold at a height suitable for landing. Such actions, in a very late phase of flight, could lead to a destabilization of the approach or a go-around from inside the visual segment. Although possible consequences of the exposure to a VNSE depend on various contributors, such as flight technical error (FTE), aircraft velocity, wind speed, glide path angle, visibility, runway lighting and human performance, the magnitude of the VNSE is the most relevant factor for assessing the safety of the navigation system.

3.3.9.2 The following values of the VNSE should be considered in the design of the augmentation system:

a) VNSE of 4 m (13 ft) or less. This is considered as an equivalent to ILS Category I with acceptable touchdown performance and a standard number of missed approaches due to visibility conditions.

b) VNSE higher than 4 m (13 ft) but not higher than 10 m (33 ft). Either a safe landing with an acceptable touchdown performance or a go-around can be expected.

c) VNSE higher than 10 m (33 ft) but not higher than 15 m (50 ft). The touchdown performance may be affected and flight crew workload may be increased.

d) VNSE higher than 15 m (50 ft). The safety margin would be significantly reduced under some operational configurations.

3.3.9.3 In considering the values above, one acceptable means to manage the risks in the visual segment is for the system to comply with the following criteria:

a) the fault-free accuracy is equivalent to ILS at ILS point B. This includes system 95 per cent VNSE less than 4 m (13 ft), and a fault-free system VNSE exceeding 10 m (33 ft) with a probability less than 10^{-7} per approach for each location where the operation is to be approved. This assessment is performed over all environmental and operational conditions under which the service is declared available;

b) under system failure conditions, the system design is such that the probability of an error greater than 15 m (50 ft) is lower than 10^{-5}, so that the likelihood of occurrence is remote. The fault conditions to be taken into account are those affecting either the core constellations or the GNSS augmentation under consideration. This probability is to be understood as the combination of the occurrence probability of a given failure with the probability of detection for applicable monitor(s). Typically, the probability of a single fault is large enough that a monitor is required to satisfy this condition.

3.3.9.4 In case these criteria are applied, the service provider could declare the Category I service area considering where Category I integrity is available, for a given VAL in the 10 m (33 ft) to 35 m (115 ft) range, in accordance with the system analysis showing where the additional conditions a) and b) described above are met.

Note.— Further guidance on the technical interpretation of these requirements is given in the Global Navigation Satellite System (GNSS) Manual *(Doc 9849, SBAS Operations, 4.3.3.3).*

3.3.10 For GBAS, a technical provision has been made to broadcast the alert limit to aircraft. For SBAS, technical provisions have been made to specify the alert limit through an updatable database (see Attachment C).

3.3.10.1 For GBAS approach service type D (see 7.1.2.1) additional lower level performance and functional requirements are introduced in order to achieve a total system capable of supporting aircraft landing operations. This service type also supports guided take-off operations.

3.3.11 The approach integrity requirements apply in any one landing and require a fail-safe design. If the specific risk on a given approach is known to exceed this requirement, the operation should not be conducted. One of the objectives of the design process is to identify specific risks that could cause misleading information and to mitigate those risks through redundancy or monitoring to achieve a fail safe design. For example, the ground system may need redundant correction processors and to be capable of shutting down automatically if that redundancy is not available due to a processor fault.

3.3.12 A unique aspect of GNSS is the time-varying performance caused by changes in the core satellite geometry. A means to account for this variation is included in the SBAS and GBAS protocols through the protection level equations, which provide a means to inhibit use of the system if the specific integrity risk is too high.

3.3.13 GNSS performance can also vary across the service volume as a result of the geometry of visible core constellation satellites. Spatial variations in system performance can further be accentuated when the ground system operates in a degraded mode following the failure of system components such as monitoring stations or communication links. The risk due to spatial variations in system performance should be reflected in the protection level equations, i.e. the broadcast corrections.

3.3.14 GNSS single-frequency augmentations are also subject to several atmospheric effects, particularly due to the ionosphere. Spatial and temporal variations in the ionosphere will affect mostly single-frequency navigation because they can cause local or regional ionospheric delay errors that cannot be corrected within the L1 SBAS or GBAS architectures due to the definition of the message protocols and the sparse sampling of augmentation systems. Such events are rare and their likelihood varies by region, but they are not expected to be negligible. The resulting errors can be of sufficient magnitude to cause misleading information and should be mitigated in the system design through accounting for their effects in the broadcast parameters (e.g. σ_{iono_vert} in GBAS), and monitoring for excessive conditions where the broadcast parameters are not adequate. The likelihood of encountering such events should be considered when developing any system monitor. SBAS dual-frequency augmentations use ionosphere-free pseudo-ranges in order to remove the first order ionosphere delay in the position computation. The dual-frequency protection level includes a small error allocation to bound the residual ionosphere errors and greatly reduce the impact of local and temporal variations in ionospheric delays on the navigation solution.

3.3.15 Another environmental effect that should be accounted for in the ground system design is the errors due to multipath at the ground reference receivers, which depend on the physical environment of monitoring station antennas as well as on satellite elevations and times in track.

3.3.16 SBAS needs to assure the integrity of its broadcast corrections as required in Chapter 3, 3.7.2.4, throughout its coverage area. This requirement also applies outside the intended service area, where user receivers could navigate using either an SBAS navigation solution, if available, or L1 fault detection and exclusion (FDE) navigation solution that combines satellites with SBAS corrections and satellites without SBAS corrections. DFMC SBAS corrections are not intended for use in an FDE navigation solution. The L1 SBAS contributions to a single-frequency FDE navigation solution are limited to assuring the integrity of the transmitted corrections. SBAS systems have to comply with all the integrity requirements for all typical

operations from En-route to Category I, defined in Chapter 3, Table 3.7.2.4-1, in the coverage area when, for a given operation, the horizontal and vertical protection levels are lower than the corresponding alert limits. This is of particular importance for vertically guided operations using SBAS that are not controlled by FAS data block.

3.4 Continuity of service

3.4.1 Continuity of service of a system is the capability of the system to perform its function without unscheduled interruptions during the intended operation.

3.4.2 *En-route*

3.4.2.1 For en-route operations, continuity of service relates to the capability of the navigation system to provide a navigation output with the specified accuracy and integrity throughout the intended operation, assuming that it was available at the start of the operation. The occurrence of navigation system alerts, either due to rare fault-free performance or to failures, constitute continuity failures. Since the durations of these operations are variable, the continuity requirement is specified as a probability on a per-hour basis.

3.4.2.2 The navigation system continuity requirement for a single aircraft is $1 - 1 \times 10^{-4}$ per hour. However, for satellite-based systems, the signal-in-space may serve a large number of aircraft over a large area. The continuity requirements in Chapter 3, Table 3.7.2.4-1, represent reliability requirements for the GNSS signal-in-space, i.e. they derive mean time between outage (MTBO) requirements for the GNSS elements.

3.4.2.3 A range of values is given in Chapter 3, Table 3.7.2.4-1, for the signal-in-space continuity requirement for en-route operations. The lower value is the minimum continuity for which a system is considered to be practical. It is appropriate for areas with low traffic density and airspace complexity. In such areas, the impact of a navigation system failure is limited to a small number of aircraft, and there is, therefore, no need to increase the continuity requirement significantly beyond the single aircraft requirement ($1 - 1 \times 10^{-4}$ per hour). The highest value given (i.e. $1 - 1 \times 10^{-8}$ per hour) is suitable for areas with high traffic density and airspace complexity, where a failure will affect a large number of aircraft. This value is appropriate for navigation systems where there is a high degree of reliance on the system for navigation and possibly for dependent surveillance. The value is sufficiently high for the scenario based on a low probability of a system failure during the life of the system. Intermediate values of continuity (e.g. $1 - 1 \times 10^{-6}$ per hour) are considered to be appropriate for areas of high traffic density and complexity where there is a high degree of reliance on the navigation system but in which mitigation for navigation system failures is possible. Such mitigation may be through the use of alternative navigation means or the use of ATC surveillance and intervention to maintain separation standards. The values of continuity performance are determined by airspace needs to support navigation where GNSS has either replaced the existing navigation aid infrastructure or where no infrastructure previously existed.

3.4.3 *Approach and landing*

3.4.3.1 For approach and landing operations, continuity of service relates to the capability of the navigation system to provide a navigation output with the specified accuracy and integrity during the approach and landing, given that it was available at the start of the operation. In particular, this means that loss of continuity events that can be predicted and for which NOTAMs have been issued do not have to be taken into account when establishing compliance of a given system design against the SARPs continuity requirement. The occurrence of navigation system alerts, either due to rare fault-free performance or to failures, constitutes a loss of continuity event. In this case, the continuity requirement is stated as a probability for a short exposure time.

3.4.3.2 The continuity requirements for approach and landing operations represent only the allocation of the requirement between the aircraft receiver and the non-aircraft elements of the system. In this case, no increase in the requirement is considered necessary to deal with multiple aircraft use of the system. The continuity value is normally related only to the risk

associated with a missed approach and each aircraft can be considered to be independent. However, in some cases, it may be necessary to increase the continuity values since a system failure has to be correlated between both runways (e.g. the use of a common system for approaches to closely-spaced parallel runways).

3.4.3.3 For GNSS-based APV and Category I approaches, missed approach is considered a normal operation, since it occurs whenever the aircraft descends to the decision altitude for the approach and the pilot is unable to continue with visual reference. The continuity requirement for these operations applies to the average risk (over time) of loss of service, normalized to a 15-second exposure time. Therefore, the specific risk of loss of continuity for a given approach could exceed the average requirement without necessarily affecting the safety of the service provided or the approach. A safety assessment performed for one system led to the conclusion that, in the circumstances specified in the assessment, continuing to provide the service was safer than withholding it.

3.4.3.4 For those areas where the system design does not meet the average continuity risk specified in the SARPs, it is still possible to publish procedures. However, specific operational mitigations should be put in place to cope with the reduced continuity expected. For example, flight planning may not be authorized based solely on a GNSS navigation means with such a high average continuity risk.

3.5 Availability

3.5.1 The availability of GNSS is characterized by the portion of time the system is to be used for navigation during which reliable navigation information is presented to the crew, autopilot, or other system managing the flight of the aircraft.

3.5.2 When establishing the availability requirements for GNSS, the desired level of service to be supported should be considered. If the satellite navigation service is intended to replace an existing en-route navigation aid infrastructure, the availability of the GNSS should be commensurate with the availability provided by the existing infrastructure. An assessment of the operational impact of a degradation in service should be conducted.

3.5.3 Where GNSS availability is low, it is still possible to use the satellite navigation service by restricting the navigation operating times to those periods when it is predicted to be available. This is possible in the case of GNSS since unavailability due to insufficient satellite geometry is repeatable. Under such restrictions, there remains only a continuity risk associated with the failure of necessary system components between the time the prediction is made and the time the operation is conducted.

3.5.4 *En-route*

3.5.4.1 Specific availability requirements for an area or operation should be based upon:

a) traffic density and complexity;

b) alternate navigation aids;

c) primary/secondary surveillance coverage;

d) air traffic and pilot procedures; and

e) duration of outages.

3.5.4.2 For this reason, the GNSS SARPs specify a range of values for availability requirements. The requirements support GNSS sole-means operations in airspace with various levels of traffic and complexity. The lower end of the range is only sufficient for providing sole means of navigation in a low traffic density and complexity airspace.

3.5.4.3 While augmentations can reduce the dependency of the GNSS on a particular core element, they do not provide usable service without the core elements. The requirement for the availability of a particular augmentation in an area should account for potential degradation in the GNSS core elements (i.e. the minimum constellation of core elements (number and diversity of satellites) that is expected). Operational procedures should be developed in case such a degraded configuration occurs.

3.5.5 *Approach*

3.5.5.1 Specific requirements for an area should be based upon:

a) traffic density and complexity;

b) procedures for filing and conducting an approach to an alternate airport;

c) navigation system to be used for an alternate airport;

d) air traffic and pilot procedures;

e) duration of outages; and

f) geographic extent of outages.

3.5.5.2 When developing operating procedures for GNSS approach systems, the duration of an outage and its impact on the alternate airport should be considered. Although GNSS outages can occur which affect many approaches, the approach service can be restored without any maintenance because of the orbiting of the satellites.

3.5.6 *Determining GNSS availability*

Note.— Additional guidance material pertaining to reliability and availability of radio communications and navigation aids is contained in Attachment F.

3.5.6.1 The availability of GNSS is complicated by the movement of satellites relative to a coverage area under consideration and the potentially long time needed to restore a satellite in the event of a failure. Accurately measuring the availability would require many years to allow for a measurement period longer than the MTBF and repair times. The availability of GNSS should be determined through design, analysis and modelling, rather than measurement. The availability model should account for the ionospheric, tropospheric and receiver error models used by the receiver to verify integrity (e.g. HPL, LPL and VPL calculations). The availability specified in Chapter 3, 3.7.2.4, applies to the design availability.

3.5.6.2 The availability of ABAS, GBAS and SBAS must be evaluated by comparing the augmented performance to the operational requirements of Chapter 3, 3.7.2.4. The availability of ABAS, GBAS and SBAS does not directly relate to the core constellation service availability standards in Chapter 3. Availability analysis is based on the number of usable satellites from the core constellation(s) and the performance of the augmentation system(s). Information on the operational satellites/slots is given in the satellite/slot/constellation availability standards or guidance material for each core constellation.

4. GNSS CORE ELEMENTS

4.1 Core constellations

4.1.1 GPS

Note.— Additional information concerning GPS can be found in the GPS SPS PS IS-GPS-200K, and IS-GPS-705F.

4.1.1.1 The L1 C/A code performance standards are based upon the assumption that a representative standard positioning service (SPS) receiver is used. A representative receiver has the following characteristics:

a) designed in accordance with IS-GPS-200K;

b) tracking the SF L1 C/A code SPS SIS from all satellites in view above a 5-degree masking angle;

c) accomplishes satellite position and geometric range computations in the most current realization of the World Geodetic System 1984 (WGS-84) Earth-Centred, Earth-Fixed (ECEF) coordinate system;

d) generates a position and time solution from data broadcast by all satellites in view transmitting PRNs 1-32;

e) compensates for dynamic Doppler shift effects on nominal SPS ranging signal carrier phase and C/A code measurements;

f) excludes marginal and unhealthy satellites from the position solution;

g) uses up-to-date and internally consistent ephemeris and clock data within the respective curve fit intervals for all satellites it is using in its position solution; and

h) loses track in the event that a GPS satellite stops transmitting a trackable signal.

The time transfer accuracy applies to the data in the broadcast navigation message, which relates GPS SPS time to UTC as maintained by the United States Naval Observatory. A 12-channel receiver will meet performance requirements specified in Chapter 3, 3.7.3.1.1.1.1 and 3.7.3.1.1.2. A receiver that is able to track four satellites only (Appendix B, 3.1.1.3.1.2) will not get the full position domain accuracy and availability performance.

Note 1.— No user position domain performance standards are available at this time for L5-only operation because there are no SIS availability or continuity performance standards defined yet for the L5 signals. Availability and continuity performance standards for the L5 signals will be provided in advance of any declaration for an enhanced SPS which includes the L5 service. The performance standards for the L5 signals (range domain accuracy, reliability, major service failure) are at the SIS level and do not require the notion of a user receiver. However, it may be helpful when considering the accuracy and integrity standards for the L5 signals to consider that a user receiver would need to be designed to process the L5 signals in a manner analogous to how it processes the L1 signals; particularly by processing those signals in accordance with IS-GPS-705, continuously monitoring the L5 SIS health, using up-to-date and internally consistent navigation data (CNAV), and using only satellites designated as healthy during normal GPS operations.

Note 2.— Conditions indicating that a satellite is "healthy", "marginal" or "unhealthy" can be found in the GPS SPS PS, Section 2.3.2.

4.1.1.2 *Position domain accuracy*. The position domain accuracy is measured with a representative receiver and a measurement interval of 24 hours for any point within the coverage area. The positioning and timing accuracy are for the signal-in-space (SIS) only and do not include such error sources as: ionosphere, troposphere, interference, receiver noise or multipath. In order to maintain backwards compatibility, the position domain accuracy standard will be met with a representative SPS receiver tracking only PRNs 1 through 32.

4.1.1.3 *Range domain accuracy*. The range domain accuracy standard applies to normal operations, which implies that updated navigation data is uplinked to the satellites on a regular basis. Range domain accuracy is conditioned by the satellite transmitting a healthy status and transmitting C/A code and does not account for satellite failures outside of the normal operating characteristics. Range domain accuracy limits can be exceeded during satellite failures or anomalies while uploading data to the satellite. The range rate error limit is the maximum for any satellite measured over any 3-second interval for any point within the coverage area. The range acceleration error limit is the maximum for any satellite measured over any 3-second interval for any point within the coverage area. Under nominal conditions, all satellites are maintained to the same standards, so it is appropriate for availability modelling purposes to assume that all satellites have a 3.6-metre RMS SIS user range error (URE). The standards are restricted to range domain errors allocated to space and control segments.

4.1.1.4 *Availability*. The availability standard applies to normal operations, which implies that updated navigation data is uplinked to the satellites on a regular basis. Availability is the percentage of time over any 24-hour interval that the predicted 95 per cent positioning error (due to space and control segment errors) is less than its threshold, for any point within the coverage area. It is based on a 15-metre horizontal 95 per cent threshold; a 33-metre vertical 95 per cent threshold; using a representative receiver; and operating within the coverage area over any 24-hour interval. The service availability assumes a constellation that meets the criteria in Chapter 3, 3.7.3.1.1.7. As noted for position domain accuracy, in order to maintain backwards compatibility, the availability standard will be met with a representative SPS receiver tracking only PRNs 1 through 32.

4.1.1.5 *Reliability*. Reliability is the percentage of time over a specified time interval that the instantaneous SPS SIS URE is maintained within the range error limit, at any given point within the coverage area, for all healthy GPS satellites. The reliability standard is based on a measurement interval of one year and the average of daily values within the coverage area. The worst single point average reliability assumes that the total service failure time of 18 hours will be over that particular point (3 failures each lasting 6 hours).

4.1.1.6 *Major service failure.*

4.1.1.6.1 A major service failure is defined to be a condition over a time interval during which a trackable and healthy GPS satellite's instantaneous ranging signal error (excluding atmospheric and receiver errors) exceeds the range error limit of 4.42 times the integrity assured user range accuracy (IAURA) broadcast by a satellite for longer than the allowable time-to-alert (10 seconds). A major service failure occurs only if no alert is issued within the 10 second time to alert. Events when the instantaneous user range error (URE) exceeds 4.42 times the IAURA for a total duration of less than 10 seconds are not counted as major service failures. Once an alert has been issued, the major service failure event ceases to have any impact on SPS SIS integrity.

4.1.1.6.2 The instantaneous SIS URE will depend upon the combination of SIS components used. The major service failure standards apply for both single-frequency and dual-frequency users using these SIS component combinations in Table D-2.

Table D-2. GPS SPS SIS component combinations

One carrier, single-frequency (SF)	*Two carriers, dual-frequency (DF)*
C/A-code + LNAV data	(C/A + I5)-codes + CNAV data
I5-code + CNAV data	(C/A + Q5)-codes + CNAV data
Q5-code + CNAV data	(C/A + I5+Q5)-codes + CNAV data
(I5+Q5)-codes + CNAV data	

4.1.1.6.3 For SIS component combinations using LNAV data, the IAURA is equal to the upper bound on the URA value corresponding to the URA index "N" currently broadcast by the satellite in subframe 1. This URA is specific to the broadcasting satellite. For SIS component combinations using CNAV data, the IAURA is the root sum square (RSS) of an elevation-dependent function of the upper bound value of the URA_{ED} component and a non-elevation-dependent function of the upper bound value of the URA_{NED} component currently broadcast by the satellite in MT-10 and MT-3x respectively. This IAURA is also specific to the broadcasting satellite. The IAURA for a marginal SPS SIS is not defined and there is no IAURA for an unhealthy SPS SIS. Since the URAs and IAURAs vary with time, a validity period for each is specified in the GPS interface specifications.

4.1.1.6.4 The onset rate, R_{sat}, is defined as the probability of a major service failure on any particular satellite over any hour, given that the maximum SPS SIS instantaneous URE did not exceed 4.42 times the IAURA at the start of the hour. The mean fault duration is one hour and the worst-case duration is six hours.

4.1.1.6.5 The probabilities of a single satellite major service failure (P_{sat}) for a particular satellite and a common-cause, multi-satellite major service failure (P_{const}) are instantaneous state probabilities equivalent to the fraction of time when the SPS SIS instantaneous URE exceeds 4.42 times the IAURA for more than 10 seconds without an alert issued within those 10 seconds.

4.1.1.6.6 The probability of 1×10^{-5} in Chapter 3, 3.7.3.1.1.4 corresponds to a maximum of 3 major service failures, with one-hour duration, for the entire constellation per year assuming a maximum constellation of 32 satellites.

4.1.1.7 *Continuity*. Continuity for a healthy GPS satellite is the probability that the SPS SIS will continue to be healthy without unscheduled interruption over a specified time interval. Scheduled interruptions which are announced at least 48 hours in advance do not contribute to a loss of continuity.

4.1.1.8 *Coverage*. The SPS supports the terrestrial coverage area, which is from the surface of the earth up to an altitude of 3 000 km.

4.1.1.9 *Normal operations*. In normal operations mode, the satellites are uploaded with fresh navigation (NAV) message data by the control segment on a regular basis. The SPS SIS indicates when the satellite is in the normal operations mode by way of the C/A code signal LNAV data stream fit interval flag being set to "0" (zero) in accordance with IS-GPS-200K. When the fit interval flag is set to "1" (one), the satellite is operating in the extended operations mode. Special SPS SIS accuracy standards apply for the extended operations mode. See IS-GPS-200K for further details on the fit interval flag.

Note 1.— There is no equivalent "normal operations mode" flag (fit interval flag) in the CNAV data stream on the I5-code signal

Note 2.— Additional information concerning normal operations is given in the GPS SPS PS, Sections A.4.3.2 and A.4.3.3.

4.1.2 GLONASS

Note.— Additional information is given in the GLONASS FDMA ICD and in the GLONASS CDMA ICD General Description.

4.1.2.1 *Assumptions*. The performance standard is based upon the assumption that a representative channel of standard accuracy (CSA) receiver is used. A representative receiver has the following characteristics: designed in accordance with GLONASS ICD; uses a 5-degree masking angle; accomplishes satellite position and geometric range computations in the most current realization of the PZ-90 and uses PZ-90 – WGS-84 transformation parameters as indicated in Appendix B, 3.1.2.5.2; generates a position and time solution from data broadcast by all satellites in view; compensates for dynamic Doppler shift effects on nominal CSA ranging signal carrier phase and standard accuracy signal measurements; excludes GLONASS unhealthy satellites from the position solution; uses up-to-date and internally consistent ephemeris and clock data for all satellites it is using in its position solution; and loses track in the event that a GLONASS satellite stops transmitting standard accuracy code. The time transfer accuracy applies to a stationary receiver operating at a surveyed location.

4.1.2.2 *Accuracy*. Accuracy is measured with a representative receiver and a measurement interval of 24 hours for any point within the coverage area. The positioning and timing accuracy of single-frequency solutions are for the signal-in-space (SIS) only and do not include such error sources as: ionosphere, troposphere, interference, receiver noise or multipath. Dual-frequency solution accuracy characteristics include ionosphere residual errors. The accuracy is derived based on the worst two of 24 satellites being removed from the constellation and a 6-metre constellation RMS SIS user range error (URE).

4.1.2.3 *Range domain accuracy*. Range domain accuracy is conditioned by the satellite indicating a healthy status and transmitting standard accuracy code and does not account for satellite failures outside of the normal operating characteristics. Range domain accuracy limits can be exceeded during satellite failures or anomalies while uploading data to the satellite. Exceeding the range error limit constitutes a major service failure as described in 4.1.2.6. The range rate error limit is the maximum for any satellite measured over any 3-second interval for any point within the coverage area. The range acceleration error limit is the maximum for any satellite measured over any 3-second interval for any point within the coverage area. The range error accuracy over all satellites is the 95 per cent threshold of the URE of all satellites over any 24-hour interval for any point within the coverage area. The range error accuracy for any satellite is calculated over a 30-day interval. Under nominal conditions, all satellites are maintained to the same standards, so it is appropriate for availability modelling purposes to assume that all satellites have a 6-metre RMS SIS URE. The standards are restricted to range domain errors allocated to space and control segments.

4.1.2.4 *Availability*. Availability is the percentage of time over any 24-hour interval that the predicted 95 per cent positioning error (due to space and control segment errors) is less than its threshold, for any point within the coverage area. It is based on a 12 metre (40-foot) horizontal 95 per cent threshold and a 25-metre (80-foot) vertical 95 per cent threshold, using a representative receiver and operating within the coverage area over any 24-hour interval. The service availability assumes the worst combination of two satellites out of service.

4.1.2.4.1 *Satellite/constellation availability*. Twenty-four operational satellites are available in orbit with 0.95 probability (averaged over any day), where a satellite is defined to be operational if it is capable of, but is not necessarily transmitting, a usable ranging signal. At least 21 satellites in the 24 nominal plane/slot positions must be set healthy and must be transmitting a navigation signal with 0.98 probability (yearly averaged).

4.1.2.5 *Reliability*. Reliability is the percentage of time over a specified time interval that the instantaneous CSA SIS URE is maintained within the range error limit, at any given point within the coverage area, for all healthy GLONASS satellites. The reliability standard is based on a measurement interval of one year and the average of daily values within the coverage area. The single point average reliability assumes that the total service failure time of 18 hours will be over that particular point (three failures each lasting six hours).

4.1.2.6 *Major service failure*. A major service failure is defined as a condition over a time interval during which a single healthy GLONASS satellite's ranging signal error (excluding atmospheric and receiver errors) exceeds the range error limit of 70 m (as defined in Chapter 3, 3.7.3.1.2.4).

4.1.2.7 *Constellation fault*. Constellation fault is defined as a condition over a time interval during which more than one healthy GLONASS satellite's ranging signal error (excluding atmospheric and receiver errors) exceeds the range error limit of 70 m due to a common cause (as defined in Chapter 3, 3.7.3.1.2.5).

4.1.2.8 *Continuity*. Continuity for a healthy GLONASS satellite is the probability that the GLONASS SIS will continue to be healthy without unscheduled interruption over a specified time interval. Scheduled interruptions, which are announced at least 48 hours in advance, do not contribute to a loss of continuity.

4.1.2.9 *Coverage*. The GLONASS CSA supports the terrestrial coverage area, which is from the surface of the earth up to an altitude of 2 000 km.

4.1.2.10 *GLONASS time*. GLONASS time is generated based on GLONASS Central Synchronizer time. Daily instability of the Central Synchronizer hydrogen clock is not worse than 5×10^{-14}. The difference between GLONASS time and UTC(SU) is within 1 millisecond. The navigation message contains the requisite data to relate GLONASS time to UTC(SU) within 0.7 microsecond.

4.1.2.11 *Transformation of GLONASS-M current data information into common form*. A satellite navigation message contains current data information in N_T parameter. It could be transformed into the common form by the following algorithm:

a) Current year number J in the four-year interval is calculated:

$1 \le N_T \le 366$; $J = 1$;
$367 \le N_T \le 731$; $J = 2$;
$732 \le N_T \le 1\,096$; $J = 3$;
$1\,097 \le N_T \le 1\,461$; $J = 4$.

b) Current year in common form is calculated by the following formula:

$$Y = 1\,996 + 4\,(N_4 - 1) + (J - 1).$$

c) Current day and month (dd/mm) are extracted from the reference table stored in user equipment ROM. The table interrelates N_T parameter and common form dates.

4.1.2.11.1 *GLONASS coordinate system*. The GLONASS coordinate system is PZ-90 as described in *Parameters of Earth, 1990 (PZ-90)*, published by the Topographic Service, Russian Federation Ministry of Defence, Moscow.

4.1.2.11.2 PZ-90 parameters include fundamental geodetic constants, dimensions of the common terrestrial ellipsoid, the characteristics of the gravitational field of the earth, and the elements of the Krasovsky ellipsoid (coordinate system 1942) orientation relative to the common terrestrial ellipsoid.

4.1.2.11.3 By definition, the coordinate system PZ-90 is a geocentric Cartesian space system whose origin is located at the centre of the earth's body. The Z-axis is directed to the Conventional Terrestrial Pole as recommended by the International Earth Rotation Service. The X-axis is directed to the point of intersection of the earth's equatorial plane and zero meridian established by the Bureau International de l'Heure. The Y-axis completes the right-handed coordinate system.

4.1.2.11.4 Geodetic reference systems WGS-84 and PZ-90 are maintained consistent with the International Terrestrial Reference Frame (ITRF). While the current conversion parameters from PZ-90 to WGS 84 are provided in Appendix B, 3.1.2.5.2, the application of previous versions of these parameters is also appropriate as long as performance requirements of Chapter 3, Table 3.7.2.4-1 for intended operation are met.

4.1.3 Galileo

Note.— Additional information concerning the Galileo Open Service is given in the Galileo OS SIS ICD and Galileo OS SDD.

4.1.3.1 *Assumptions*. The Galileo Open Service (OS) performance standard is based upon the assumption that a representative OS receiver is used. A representative receiver has the following characteristics:

a) designed in accordance with Galileo OS SIS ICD;

b) uses a 5-degree masking angle;

c) accomplishes satellite position and geometric range computations in the most current realization of the Galileo Terrestrial Reference Frame (GTRF);

d) generates a position and time solution from data broadcast by all satellites in view;

e) excludes Galileo non-healthy signals from the position solution;

f) uses up-to-date and internally consistent ephemeris and clock data for all satellites it is using in its position solution; and

g) navigation data (ephemeris, satellite clock correction and SISA parameters) is not used beyond the maximum validity time of 4 hours.

4.1.3.2 *Position domain accuracy*

4.1.3.2.1 *Position domain accuracy for single-frequency Galileo OS*. The horizontal/vertical position domain accuracy is measured with a representative receiver and a measurement interval of 30 days for any point within the coverage area. The position is computed using single-frequency "healthy" SIS. The positioning and timing accuracy are for the SIS only (including BGD errors) and do not include such error sources as: ionosphere, troposphere, interference, receiver noise or multipath.

4.1.3.2.2 *Position domain accuracy for dual-frequency Galileo OS*. The horizontal/vertical position domain accuracy is measured with a representative receiver and a measurement interval of 30 days for any point within the coverage area. The position is computed using dual-frequency "healthy" SIS. The positioning and timing accuracy are for the SIS only and do not include such error sources as: ionosphere, troposphere, interference, receiver noise or multipath.

4.1.3.3 *Range domain accuracy*. The Galileo ranging accuracy is defined as a statistical measure of the SIS range error time series. It is only measured for time periods during which the transmitted SIS is healthy. Galileo ranging accuracy is evaluated over all age of data (AOD) values, i.e. the SIS range error time series will consider the navigation message at the age of data when it was observed. It is computed for both single-frequency and dual-frequency users. The range rate error limit is the maximum for any satellite measured over any 3-second interval for any point within the coverage area. The 95th percentile SIS range error accuracy for any satellite is calculated over a 30-day interval. The 99.9th percentile SIS range error accuracy for any satellite is normalized annually.

4.1.3.3.1 *SIS accuracy*. The SIS accuracy is a prediction of the minimum standard deviation (1 sigma) of the unbiased Gaussian distribution which overbounds the predictable distribution of SIS range error for all possible user locations within the satellite coverage area. The SISA parameter, broadcast in Galileo SIS navigation message, provides the user with an indication of the SIS accuracy according to Appendix B, 3.1.3.1.3.4.2. The SISA parameter can assume 255 values. Nevertheless, when it is used as one of the means for determining the SIS status of a Galileo satellite, it must be considered as a binary indicator with its only meaningful values being "no accuracy prediction available" (NAPA) when SISA=255 or "not NAPA" when SISA≠255. SISA values from 126 to 254 are described as spare, and should be considered as "not NAPA".

4.1.3.3.2 *Galileo BGD*. Galileo BGD is the estimate of the group delay between the different frequencies of a specific Galileo satellite. It is provided as part of the Galileo broadcast navigation data as specified in Appendix B, 3.1.3.1.3.1 and 3.1.3.1.3.2.

4.1.3.4 *Galileo UTC time determination accuracy*. The Galileo UTC time determination accuracy depends on both the instantaneous GST determination error and on the error in the broadcast GST-UTC conversion parameters. This second component is defined as the Galileo SIS UTC time dissemination accuracy.

4.1.3.4.1 *Galileo SIS UTC time dissemination accuracy*. The Galileo SIS UTC time dissemination accuracy is defined as the 95th percentile of the broadcast GST/UTC conversion parameters error. Galileo SIS UTC time dissemination accuracy is the SIS component of the overall user UTC time determination, which is driven by the accuracy of the broadcast GST-UTC parameters. It does not contain effects that are not under the control of the Galileo operator such as user local contributions depending on the receivers or due to atmospheric effects.

4.1.3.5 *Service availability*. Service availability is the percentage of time over a 30-day interval that the predicted 95 per cent positioning error (due to space and control segment errors) is less than its threshold, for any point within the coverage area. It is based on a 10-metre horizontal 95 per cent threshold; a 16-metre vertical 95 per cent threshold; using a representative receiver; and operating within the coverage area over the 30-day interval. The service availability assumes a constellation that meets the criteria in 4.1.3.5.1.

4.1.3.5.1 *SIS per-slot/constellation availability*. The probability that an operational slot in the Galileo constellation is occupied by a satellite transmitting healthy SIS is higher than 0.95 (normalized annually). For the Galileo baseline configuration, the probability that at least 21 satellites in the nominal 24-slot positions are set healthy and are transmitting a navigation signal, is higher than 0.97 (normalized annually). The SIS constellation availability can be derived from the SIS per-slot availability by means of a binomial model.

4.1.3.6 *Probability of failure*

4.1.3.6.1 P_{sat}. P_{sat} is the probability that the instantaneous ranging signal error of a healthy Galileo satellite (excluding atmospheric and receiver errors) exceeds k times the Galileo user range accuracy (Galileo URA). Galileo URA in P_{sat} definition corresponds to $\sigma_{URA,DF}$ or to $\sigma_{URA,SF}$ for dual-frequency or single-frequency users, respectively. k is the number of standard deviations from the mean corresponding to a probability of P_{sat} in a normal distribution. For instance, a k factor of 4.17 corresponds to a 3×10^{-5} P_{sat} value. P_{sat} applies at any given time and at any location in the satellite visibility area to both single-frequency and dual-frequency users.

4.1.3.6.2 P_{const}. P_{const} is the probability that the instantaneous ranging signal errors of two or more healthy Galileo satellites (excluding atmospheric and receiver errors) exceeds k times the Galileo user range accuracy (Galileo URA) due to a common failure. Galileo URA in the P_{const} definition corresponds to $\sigma_{URA,DF}$ or to $\sigma_{URA,SF}$ for dual-frequency or single-frequency users, respectively. P_{const} applies at any given time and at any location in the respective visibility areas of the affected satellites to both single-frequency and dual-frequency users.

4.1.3.6.3 $\sigma_{URA,DF}$. Galileo $\sigma_{URA,DF}$ is defined as the standard deviation of a zero-mean normal distribution which overbounds the actual distribution of SIS range errors more probable than P_{sat}. Galileo $\sigma_{URA,DF}$ applies to any user location and to a healthy SIS dual-frequency combination E1/E5a.

4.1.3.6.4 $\sigma_{URA,SF}$. Galileo $\sigma_{URA,SF}$ is defined as the standard deviation of a zero-mean normal distribution which overbounds the actual distribution of SIS range errors more probable than P_{sat}. Galileo $\sigma_{URA,SF}$ applies to any user location and to a healthy SIS single-frequency user (E1 or E5a). $\sigma_{URA,SF}$ considers the Galileo σ_{BGD} and can be derived from the following expression:

$$\sigma^2_{URA,SF} = \sigma^2_{URA,DF} + \gamma_f^2 \cdot \sigma^2_{BGD}$$

where

γ_f represents the frequency inflation factor equal to f_{E1}^2/f_{E5a}^2 for E5a users and to 1 for E1 users.

The same expression applies between Galileo $\sigma_{URE,SF}$ and $\sigma_{URE,DF}$. The $\sigma_{URE,SF}$ and $\sigma_{URE,DF}$ are defined in Appendix B, section 3.4.1.1.2. This expression can also be used by Galileo receiver to compute the $\sigma_{URA,SF}$ and $\sigma_{URE,SF}$ from broadcast $\sigma_{URA,DF}$ and $\sigma_{URE,DF}$ in Galileo I/NAV word Type 22.

4.1.3.6.5 σ_{BGD}. Galileo σ_{BGD} is defined as the standard deviation of a zero-mean normal distribution, which overbounds the actual distribution of BGD residual errors such that the probability of unbounded errors is negligible with respect to P_{sat}. BGD residual errors are the remaining errors after applying Galileo BGD corrections broadcast in the navigation message.

4.1.3.7 *Continuity*. Continuity for a healthy Galileo satellite is the probability that the Galileo OS SIS will continue to be healthy without unscheduled interruption over the next hour. Scheduled interruptions which are announced at least 48 hours in advance do not contribute to a loss of SIS continuity.

4.1.3.8 *Coverage*. The Galileo OS supports the terrestrial coverage area, which is from the surface of the earth up to 30.48 km.

4.1.3.9 *Galileo system time (GST)*. The GST is a continuous timescale based on the definition of the second (according to the International System of units, SI) whose origin/reference epoch GST (t0) is defined as 13 seconds before 1999-08-22 00:00:00 UTC. The time synchronization information disseminated in the Galileo SIS (e.g. satellite clock offsets) is referenced to GST. This information allows the Galileo OS users to estimate their local time referenced to the GST realization computed by the Galileo OS receiver. In order to better support timing applications based on UTC, the Galileo OS data message includes additional parameters which enable the Galileo OS users to obtain a realization of the UTC time by applying a correction to the GST.

4.1.3.10 *Galileo terrestrial reference frame (GTRF)*. The GTRF is a highly accurate independent realization of the International Terrestrial Reference System (ITRS) based on the estimated coordinates of each of the Galileo sensor station (GSS) sites. The Galileo system uses the geodetic input information to produce navigation data (e.g. satellite ephemeris) referenced to the GTRF. Accordingly, the user position coordinates derived from Galileo position solutions are referenced to GTRF. Due to the good alignment of GTRF to ITRF both reference frames are understood to be equivalent for aviation. The GTRF is regularly aligned if new ITRF realizations are published. To obtain the position in any reference frame different from ITRF, Galileo OS user equipment needs to apply the appropriate valid transformation parameters between the latest ITRF and the desired reference frame. This transformation is under full control and responsibility of the Galileo OS user. Concerning the interoperability between GPS and Galileo, the GPS terrestrial reference frame WGS-84 and the GTRF are both realizations of the ITRF. Therefore, for most Galileo OS applications, a high level of interoperability is provided between the spatial positions obtained with GPS and those obtained with Galileo, without further activity by the user equipment.

4.1.3.11 *Age of ephemeris*. The age of ephemeris is the time elapsed between the reference t_{0e} (set at the beginning of each navigation data set) and the time of usage of the ephemeris by a receiver.

Note.— Details on how to compute the age of ephemeris can be found in Galileo OS SDD, Annex C, section 4.4.1.

4.1.3.12 *Age of data (AOD)*. The age of data (AOD) is the elapsed time between the generation of a navigation message by the ground segment and its usage at user level. Aging of data (characterized by AOD) impacts the accuracy of the orbit and clock models. The accuracy of their prediction inevitably degrades with higher ages.

4.1.4 BDS

4.1.4.1 *Assumptions*. The performance standard is based upon the assumption that a representative BDS Open Service (BDS OS) receiver is used. A representative receiver has the following characteristics: it is designed in accordance with BDS ICDs; uses a 5-degree masking angle for MEO satellites and a 12-degree masking angle for IGSO satellites; accomplishes satellite position and geometric range computations in the most current realization of the BDCS (which is equivalent to WGS-84); compensates for dynamic Doppler shift effects on nominal BDS OS ranging signal carrier phase and ranging code

measurements; excludes BDS unhealthy or marginal satellites from the position solution; uses up-to-date and internally consistent ephemeris and clock data for all satellites it is using in its position solution; and loses track in the event that a BDS satellite stops transmitting ranging code. The time transfer accuracy applies to a stationary receiver operating at a surveyed location.

4.1.4.2 *Accuracy*. Position domain accuracy is measured with a representative receiver and a measurement interval of 168 hours (seven sidereal days) for any point within the coverage area. The positioning and timing accuracy are for the SIS only and do not include such error sources as: ionosphere, troposphere, interference, receiver noise or multipath. The accuracy is derived based on the worst two of all operational satellites being removed from the constellation and a 4.6-metre 95th percentile user range error of any satellite.

4.1.4.2.1 *Time transfer accuracy*. Time transfer accuracy is the 95 per cent statistical deviation between the BDS OS timing receiver output and Coordinated Universal Time (UTC) maintained by NTSC in China. It can be used to evaluate the timing performance of a navigation satellite system.

4.1.4.3 *Range domain accuracy*. Range domain accuracy is measured with a representative receiver and a measurement interval of 168 hours. Range domain accuracy is conditioned by the satellite indicating a healthy status and transmitting BDS OS ranging code and does not account for satellite failures outside of the normal operating characteristics. Range domain accuracy limits can be exceeded during satellite failures or anomalies while uploading data to the satellite. Exceedance of the range error limit constitutes a major service failure as described in 4.1.4.5. The range rate error limit is the maximum for any satellite measured over any 3-second interval for any point within the coverage area. The range acceleration error limit is the maximum for any satellite measured over any 3-second interval for any point within the coverage area. Under nominal conditions, all satellites are maintained to the same standards, so it is appropriate for availability modelling purposes to assume that all satellites have a 4.6-metre 95th percentile user range error. The standards are restricted to range domain errors allocated to space and control segments.

4.1.4.4 *Availability*. Availability is the percentage of time over any 168-hour interval that the predicted 95 per cent positioning error (due to space and control segment errors) is less than its threshold, for any point within the coverage area. It is based on a 15-metre horizontal 95 per cent threshold and a 22-metre vertical 95 per cent threshold; using a representative receiver and operating within the coverage area over any 168-hour interval. The service availability assumes the worst combination of two out-of-service satellites.

4.1.4.4.1 *Satellite/constellation availability*. At least 24 satellites in the 27 nominal plane/slot positions must be set healthy and must be transmitting a navigation signal with a 0.998 probability (yearly averaged). At least 21 satellites in the 27 nominal plane/slot positions must be set healthy and must be transmitting a navigation signal with a 0.99999 probability (yearly averaged).

4.1.4.5 *Major service failure*

4.1.4.5.1 The single satellite major service failure is the condition that the SIS ranging error (excluding atmospheric and receiver errors) of any satellite exceeds the not-to-exceed (NTE) tolerance without an alert to users. For B1I signals, the NTE tolerance is defined to be 4.42 times the upper bound of the URA range corresponding to the URA index (URAI) value being broadcast in D1 navigation messages, as described in Appendix B, 3.1.4.1.3.1.2. For B1C and B2a signals, the NTE tolerance is defined to be 4.42 times the signal-in-space accuracy (SISA) value calculated as described in Appendix B, 3.1.4.2.5. The P_{sat} of 1×10^{-5} in Chapter 3, 3.7.3.1.4.4.1 corresponds to a maximum of three major service failures for each BDS OS signal per year assuming a maximum constellation of 30 satellites. The Mean Time to Notify (MTN) is 60 minutes.

4.1.4.5.2 The common-cause major service failure is a condition that the BDS OS SIS user range error of two or more satellites will exceed the NTE tolerance due to a common fault without an alert received at the user receiver antenna. For B1I signals, the NTE tolerance is defined to be 4.42 times the upper bound of the URA range corresponding to the URA index (URAI) value being broadcast in D1 navigation messages, as described in Appendix B, 3.1.4.1.3.1.2. For B1C and B2a signals, the NTE tolerance is defined to be 4.42 times the SISA value calculated as described in Appendix B, 3.1.4.2.5. The P_{const} of 6×10^{-5} in Chapter 3, 3.7.3.1.4.4.2 corresponds to a maximum of 0.5 commonly caused major service failures for the entire constellation per year. The MTN is 60 minutes.

4.1.4.6 *Continuity*. Continuity for a healthy BDS satellite is the probability that the BDS OS SIS will continue to be healthy without unscheduled interruption over a specified time interval. Scheduled interruptions, which are announced at least 24 hours in advance, do not contribute to a loss of continuity.

4.1.4.7 *Coverage*. The BDS OS supports the terrestrial coverage area which is from the surface of the earth up to an altitude of 1 000 km.

4.1.4.8 *BDS time*. The time reference for the BDS uses the BeiDou Navigation Satellite System Time (BDT), as described in Appendix B, 3.1.4.4.

4.1.4.9 *BDS coordinate system*. BDS uses the BeiDou Coordinate System (BDCS).

4.1.4.9.1 *BDCS origin, axis and scale*. The origin is located at the earth's centre of mass; the Z axis is the direction of the IERS (International Earth Rotation and Reference System Service) Reference Pole (IRP); the X-axis is the intersection of IERS Reference Meridian (IRM) and the plane passing through the origin and normal to the Z-axis; the Y-axis, together with the Z-axis and the X-axis, constitute a right-handed orthogonal coordinate system. The length unit is the international system of units (SI) metre.

4.1.4.9.2 *BDCS Ellipsoid*. The geometric centre of the BDCS Ellipsoid coincides with the earth's centre of mass, and the rotation axis of the BDCS Ellipsoid is the Z-axis. The parameters of BDCS Ellipsoid are defined as:

Semi-major axis: $a = 6\ 378\ 137.0$ m
Geocentric gravitational constant (mass of the earth's atmosphere included):
$\mu = 3.986004418 \times 10^{14}\ m^3/s^2$
Flattening: $f = 1/298.257222101$
Earth rotation rate: $\dot{\Omega}_e = 7.2921150 \times 10^{-5}$ rad/s

4.2 Dilution of precision

Dilution of precision (DOP) factors express how ranging accuracy is scaled by a geometry effect to yield position accuracy. The optimal geometry (i.e. the lowest DOP values) for four satellites is achieved when three satellites are equally spaced on the horizon, at minimum elevation angle, and one satellite is directly overhead. The geometry can be said to "dilute" the range domain accuracy by the DOP factor.

4.3 GNSS antenna and receiver

4.3.1 The antenna specifications in Appendix B, 3.8.3.1, determine the axial ratio performance of the antennas. The specifications for the single-frequency only antennas do not control the antenna axial ratio except at boresight.

4.3.2 Linear polarization should be assumed for the airborne antenna for SBAS GEO signals received at low-elevation angles. For instance, when receiving an SBAS GEO signal that needs to be provided at a minimum elevation angle of 5 degrees, single-frequency antennas should be presumed to be linearly polarized with −2.5 dBil (−5.5 dBic) gain. This should be taken into account in the SBAS GEO satellite link budget in order to ensure that the minimum received RF signal at the antenna port meets the requirements of Chapter 3, 3.7.3.4.5.3.2 and 3.7.3.4.6.3.

4.3.3 The failures caused by the receiver can have two consequences on navigation system performance which are the interruption of the information provided to the user or the output of misleading information. Neither of these events are accounted for in the signal-in-space requirement.

4.3.4 The nominal error of the GNSS aircraft element is determined by receiver noise, interference, and multipath and tropospheric model residual errors. Specific receiver noise requirements for both the SBAS airborne receiver and the GBAS airborne receiver include the effect of any interference below the protection mask specified in Appendix B, 3.7. The required performance has been demonstrated by receivers that apply narrow correlator spacing or code smoothing techniques.

4.3.5 The method for the search of the in-band, near-band and out-of-band maximum non-aeronautical interference tolerable power consists, for each interference bandwidth BWi, in computing the largest value of the Spectral Separation Coefficient (SSC) for all PRNs and for all central frequencies $fc_i = fc_{L1orL5}$ +/- max(BW_{GNSS}/2, BWi/2), where BW_{GNSS} = 20 MHz. For all GNSS signals' modulations (BPSK and MBOC) considered in the SARPs, this process results in an in-band, near-band maximum tolerable power monotonously increasing with BWi. The out-of-band maximum tolerable power is evaluated for BWi = 1 kHz.

4.3.6 Following Note 5 in Table B-171 of Appendix B, Table B-171 does not describe non aeronautical pulsed interferences in the environment to be considered for the L5 channel in an L1/L5 receiver as their impact is negligible compared to DME/TACAN and JTIDS/MIDS impact considered in the environment.

5. AIRCRAFT-BASED AUGMENTATION SYSTEM (ABAS)

5.1 Introduction

5.1.1 ABAS augments the information obtained from core satellite constellations with additional receiver processing and/or with information available from other sensors on board the aircraft in order to ensure operation according to the values specified in Chapter 3, 3.7.2.4.

5.1.2 ABAS includes processing schemes that provide:

a) integrity monitoring for the position solution using redundant information (e.g. multiple range measurements). The monitoring scheme generally consists of two functions: fault detection and fault exclusion. The goal of fault detection is to detect the presence of a positioning failure. Upon detection, proper fault exclusion determines and excludes the source of the failure (without necessarily identifying the individual source causing the problem), thereby allowing GNSS navigation to continue without interruption. There are two general classes of integrity monitoring: receiver autonomous integrity monitoring (RAIM), which uses GNSS information exclusively, and aircraft autonomous integrity monitoring (AAIM), which uses information from additional on-board sensors (e.g. barometric altimeter, clock and inertial navigation system (INS));

b) continuity aiding for the position solution using information of alternative sources, such as INS, barometric altimetry and external clocks;

c) availability aiding for the position solution (analogous to the continuity aiding); and

d) accuracy aiding through filtering techniques and/or estimation of remaining errors in determined ranges.

5.1.3 Non-GNSS information can be integrated with GNSS information in two ways:

a) integrated within the GNSS solution algorithm (an example is the modelling of altimetry data as an additional satellite measurement); and

b) external to the basic GNSS position calculation (an example is a comparison of the altimetry data for consistency with the vertical GNSS solution with a flag raised whenever the comparison fails).

5.1.4 Each scheme has specific advantages and disadvantages, and it is not possible to present a description of all potential integration options with specific numerical values of the achieved performance. The same applies to the situation when several GNSS elements and/or multiple frequency signals are combined.

5.2 Receiver autonomous integrity monitoring (RAIM)

5.2.1 RAIM has been implemented using GPS L1 C/A ("GPS RAIM") and fixed values for constellation performance.

5.2.2 In contrast with ARAIM (section 5.3), GPS RAIM relies on GPS constellation performance using the the broadcast URA values and a satellite fault probability of Psat = 1 x 10^{-5} or lower. Furthermore, it assumes that only one satellite fault occurs at a given time and that any bias-like errors are small enough to be overbounded by a zero-mean gaussian distribution.

5.2.3 GPS RAIM can be combined with AAIM and other augmentations including ARAIM.

5.3 Advanced RAIM (ARAIM)

5.3.1 Introduction

5.3.1.1 ARAIM refers to an implementation of GNSS-receiver based ABAS other than GPS RAIM, including single or dual frequency, and single or multiple constellation modes. ARAIM includes the provision of integrity support data (ISD). ISD is either generated by or verified by an entity referred to as the ISM generator (ISMG). There is one ISMG per core constellation. In comparison to GPS RAIM, which can be thought of as using "static ISD", ARAIM enables dynamic ISD where integrity parameters can be adapted to actual core satellite constellation performance and available performance history.

5.3.1.2 ISD will be broadcast in core satellite constellation navigation data messages. Messages containing ISD are called integrity support messages (ISM). Some ISD could also be sent outside of ISM, as part of other navigation data messages (such as IAURA for GPS).

5.3.1.3 The ISD contains parameters that describe a Gaussian overbound of the fault-free ranging signal errors as well as parameters describing the likelihood that the satellite signal is faulted and may not be adequately characterized by the fault-free Gaussian overbounds. The ARAIM algorithm uses the ISD to perform fault monitoring and integrity tests and to calculate the protection level(s) to achieve a target integrity risk performance in accordance with operational requirements. The ARAIM algorithm assumes that the fault events characterized by the ISD are independent. It is not necessary to monitor all possible combinations of satellite and constellation faults, as many of these combinations have very small contributions to the integrity risk. The ARAIM algorithm accounts for the integrity risk of the fault-free position and missed detections of monitored and unmonitored fault modes.

5.3.1.4 The ISD parameters σ_{URA} and σ_{URE} characterize the fault-free ranging signal errors caused by clock and ephemeris errors and the noise-like error contributions from antenna biases, signal deformations, inter-frequency biases, code-carrier coherence. The b_{nom} term characterizes bias-like errors that can be bounded in magnitude. These are due to antenna biases, signal deformations, inter-frequency biases, nominal code-carrier incoherence, nominal range error variation over the satellite terrestrial footprint (due to antenna anisotropy) or other quasi-static/correlated error sources. The b_{nom} term can also be used to bound asymmetry and non-unimodality in the observed clock and ephemeris error distributions. Flexibility is given to the ISMG when determining a Gaussian overbound described by b_{nom} and σ_{URE} as long as the overbounding criteria in Appendix B, 3.4.1.2.2.1 are satisfied. Several overbounding methods are available. b_{nom}, σ_{URA} and σ_{URE} are not accounting for errors caused by signal propagation through the troposphere and ionosphere.

5.3.1.5 The ISD parameters fault rate (R_{sat}, R_{const}) and fault probability (P_{sat}, P_{const}) describe the likelihood that the signal is faulted. If a mean fault duration is provided together with a fault rate, the corresponding fault probability can be derived by the receiver. The fault rate is a conservative estimate of the number of faults per hour. The ISMG can provide ISD values equivalent to the default values. However, if justified based on analysis and observed performance, the ISMG may set the broadcast fault parameters such that fault rate and fault probability are lower than default commitments. The ISMG will need to update the broadcast ISD if observed behaviour no longer supports the lower parameters. The ISMG may provide margin in the broadcast ISD by artificially inflating the observed faults by one or more to ensure that ISM updating does not become time critical.

5.3.1.6 If a core satellite constellation that does not provide an ISM in its navigation data messages is used in ARAIM, then default ISD values are used in the receiver as specified in Appendix B, 3.4.1.3.3.3. Further details about default ISD are provided in 5.3.2.

5.3.1.7 The ARAIM SARPs allow for some flexibility in the detailed assignment of responsibility for ISD parameter data integrity. For example, an ISMG could assemble or code an ISM, generate an associated CRC and then hand over the complete message to the core satellite constellation provider for broadcasting. Alternatively, the ISMG could transmit the values to be broadcast to the core satellite constellation provider, who would then assemble or code the ISM, and generate a CRC (or other suitable mechanism) as part of its normal message packaging. Whichever approach is chosen, procedures by the ISMG and the relevant core satellite constellation service provider mitigate the risk of data corruption at any stage of the entire process (Appendix B, 3.4.1.2.4). This is based on a thorough analysis of the overall system architecture. The resulting data quality assurance processes will be consistent with the supported ARAIM service type.

5.3.1.8 ARAIM may be combined with RAIM, AAIM and other augmentations.

5.3.1.9 Additional guidance material on ARAIM is provided in the *Global Navigation Satellite System (GNSS) Manual* (Doc 9849).

5.3.2 Default ISD and traceability to core satellite constellation definitions

5.3.2.1 Default ISD can be used by GNSS receivers to process satellites for which no ISM is broadcast by the core satellite constellation. Table D-3 provides justification of the values in Appendix B, 3.4.1.3.3.3 by referencing the corresponding sections in the core satellite constellation standards.

Table D-3. Default ISD parameters

Default ISD parameters					
	GPS	GLONASS	Galileo	BDS	Notes
$P_{const,\ default}$	$\leq 1\times10^{-8}$	$\leq 1\times10^{-4}$	$\leq 2\times10^{-4}$	$\leq 6\times10^{-5}$	
SARPs Reference	Chapter 3, 3.7.3.1.1.4.3	Chapter 3, 3.7.3.1.2.5	Chapter 3, 3.7.3.1.3.6	Chapter 3, 3.7.3.1.4.4.2	
$P_{sat,\ default}$	$\leq 1\times10^{-5}$	$\leq 1\times10^{-4}$	$\leq 3\times10^{-5}$	$\leq 1\times10^{-5}$	
SARPs Reference	Chapter 3, 3.7.3.1.1.4.2	Chapter 3, 3.7.3.1.2.4	Chapter 3, 3.7.3.1.3.5	Chapter 3, 3.7.3.1.4.4.1	
$\sigma_{URA,\ default,\ DF}$ [m]	IAURA (Note 2)	9	6	7	If value is not stated in [m], it is a broadcast parameter
SARPs Reference	Appendix B, 3.1.1.1.3.1.2 and 3.1.1.2.2.4	Appendix B, 3.1.2.1.7.3, not exceeding values in Chapter 3, 3.7.3.1.2.4 and 3.7.3.1.2.5	4.1.3.6.3 and 4.1.3.6.4, not exceeding values in Chapter 3, 3.7.3.1.3.7 and 3.7.3.1.3.8	Appendix B, 3.1.4.1.3.1.2 and 3.1.4.2.5	
$\sigma_{URA,\ default,\ SF}$ [m]	IAURA (Note 2)	9	6.5 (E1), 7.5 (E5a) (Note 3)	7	
$\sigma_{URE,\ default,\ DF}$ [m]	Nominal URA (Note 2)	8	4	7	
$\sigma_{URE,\ default,\ SF}$ [m]	Nominal URA (Note 2)	8	4.7 (E1), 6 (E5a) (Note 3)	7	
$b_{nom,\ default}$ [m]	0	0	0	0	
$R_{const,\ default}$ [per hour]	$\leq 1\times10^{-8}$		$\leq 1\times10^{-4}$/h	$\leq 6\times10^{-5}$	
$R_{sat,\ default}$ [per hour]	$\leq 1\times10^{-5}$		$\leq 2\times10^{-5}$/h	$\leq 1\times10^{-5}$	
MFDconst $_{default}$ [hours]	1	10	See 5.3.2.3	1	
MFDsat $_{default}$ [hours]	1	3	See 5.3.2.3	1	

Note 1.— SF refers to single frequency processing and DF to dual frequency.

Note 2.— See Appendix B, 3.4.1.3.3.3, Note 3, for interface control document references.

Note 3.— As indicated in 4.1.3.6.4 for the Galileo $\sigma_{URA,SF}$, the Galileo single frequency $\sigma_{URA,\ SF}$ and $\sigma_{URE,\ SF}$ are linked to the Galileo dual frequency $\sigma_{URA,\ DF}$ and $\sigma_{URE,\ DF}$ by the following equation:

$$\sigma_{SF}^2 = \sigma_{DF}^2 + {\gamma_f}^2 \cdot \sigma_{BGD}^2 \; with \; \gamma_f = \frac{f_{E1}^2}{f_{E5a}^2} for \; E5a, \; \gamma_f = 1 \; for \; E1 \; and \; \sigma_{BGD} = \; 2.5 \; m \; .$$

5.3.2.2 Some ISD parameters (P_{sat}, P_{const}, R_{sat}, R_{const}) are specified with a "$\leqslant$" sign. This means that core satellite constellation providers are free to further improve their minimum service commitments (which may or may not be reflected in future amendments to this Annex). However, any such future improvements will likely not be implemented in the default ISD values used by ARAIM receivers already installed in aircraft at that time.

5.3.2.3 The Galileo ARAIM service provision scheme is based on commitments made regarding the fault probabilities (P_{sat} and P_{const}) and fault rates (R_{sat} and R_{const}). Those parameters, when complemented by σ_{URA} ,σ_{URE} and b_{nom}, are sufficient to run the airborne integrity monitoring algorithm under ARAIM augmentation. Galileo MFD is not specified. The users should not assume any MFD values from the Galileo commitments on P_{sat}, P_{const}, R_{sat} and R_{const}, since those parameters include margin on top of the actual performance that the user may experience and therefore MFD values derived from them may not be representative of the Galileo system.

6. SATELLITE-BASED AUGMENTATION SYSTEM (SBAS)

6.1 SBAS may provide an L1 SBAS service augmenting GPS and/or GLONASS constellations, a dual-frequency, multi-constellation (DFMC) SBAS service augmenting one or more (up to four) constellations, or both services. The L1 SBAS service uses the L1 message data to support single-frequency service. The DFMC SBAS service uses the L5 message data to support DFMC SBAS service. The SBAS messages and data content of the L1 SBAS and DFMC SBAS services are independent and users can only apply the data from the data channel associated with the specific service. In addition, when the SBAS supports ranging, the SBAS satellite may be used as a single-frequency ranging source on L1 using the L1 data, or a dual-frequency ranging source combining both L1 and L5 pseudo-ranges using the L5 data. An SBAS is made up of three distinct elements:

a) the ground infrastructure;

b) the SBAS satellites; and

c) the SBAS airborne receiver.

6.1.1 The ground infrastructure includes the monitoring and processing stations that receive the data from the navigation satellites and compute integrity, corrections and ranging data which form the SBAS signal-in-space. The SBAS satellites relay the data relayed from the ground infrastructure to the SBAS airborne receivers that determine position and time information using core satellite constellation(s) and SBAS satellites. The SBAS airborne receivers acquire the ranging and correction data and apply these data to determine the integrity and improve the accuracy of the derived position.

6.1.2 The SBAS ground network measures the pseudo-range between the ranging source and an SBAS receiver at the known locations and provides separate corrections for ranging source ephemeris errors, clock errors and, in addition for the L1 SBAS service, ionospheric delays and errors. The user applies a tropospheric delay model.

6.1.3 The ranging source ephemeris error and slow moving clock error are the primary basis for the corrections provided in DFMC SBAS service and provided in the long-term correction in L1 SBAS. The ranging source clock error is adjusted for the long-term correction and tropospheric error and is the primary basis for the fast correction provided in L1 SBAS service. The ionospheric errors among many ranging sources are combined into vertical ionospheric errors at predetermined ionospheric grid points. These errors are the primary basis for ionospheric corrections provided in L1 SBAS service. No fast corrections are provided in DFMC SBAS service as a result of the slow clock drift performance of GNSS core constellations. No ionospheric corrections are provided in DFMC SBAS service as DFMC SBAS corrections are provided for ranging derived from the ionosphere-free combination of satellite signals, which removes almost all ionospheric delay from the ranging measurements.

6.2 SBAS coverage area and service areas

6.2.1 It is important to distinguish between the coverage area and service areas for an SBAS. A coverage area typically corresponds to the union of SBAS satellite footprint areas and comprises one or more service areas. Service areas are declared by SBAS service providers or by the State or group of States managing the SBAS, for the typical operations defined in Table 3.7.2.4-1 (e.g. En-route, APV-I, Category I) where the corresponding accuracy, integrity and continuity requirements are met with a certain availability (e.g. 99 per cent). Some SBAS service providers publish service areas of their systems (e.g. WAAS Performance standard, EGNOS Service Definition Document and AIPs). The service area for En-route may be larger than the service area for APV-I. DFMC SBAS can provide service areas that can be larger than service areas provided by L1 SBAS for the same service levels. For the GNSS receiver, the SIS is usable whenever the protection levels are lower than the alert limits for the intended operation (VPL<VAL and HPL<HAL), irrespective of whether or not the GNSS receiver is inside the corresponding service area defined by the SBAS service provider. SBAS systems support operations based on some or all of the SBAS functions defined in Chapter 3, 3.7.3.4.2. These functions can be related to the operations that are supported as follows:

a) *Ranging*: SBAS can provide a single-frequency ranging source on L1. L1 ranging can be used in the SBAS solution or for other augmentation(s) (ABAS, GBAS or other SBAS); SBAS can provide a dual-frequency ranging source using L1 and L5 frequencies suitable for a DFMC SBAS position derived from the broadcasting SBAS system.

b) *Satellite status and basic differential corrections*: L1 SBAS provides en-route, terminal, and non precision approach service. Different operations (e.g. performance-based navigation (PBN) operations) may be supported in different service areas;

c) *Precise differential corrections*: L1 SBAS provides APV and precision approach service (i.e. APV-I and Category I precision approach may be supported in different service areas);

d) *Ionosphere-free differential correction*: DFMC SBAS provides en-route, terminal, non precision approach, APV and precision approach service (i.e. APV-I and Category I precision approach). Different operations (e.g. PBN operations) may be supported in different service areas.

6.2.2 Satellite-based augmentation services are provided by the Wide Area Augmentation System (WAAS) (North America), the European Geostationary Navigation Overlay Service (EGNOS) (Europe and Africa), the Michibiki Satellite-based Augmentation Service (MSAS) (Japan) and the GPS-aided Geo-augmented Navigation (GAGAN) (India). The System for Differential Correction and Monitoring (SDCM) (Russia), the BeiDou Satellite-based Augmentation System (BDSBAS) (China), the Korea Augmentation Satellite System (KASS) (Republic of Korea), the Augmented Navigation for Africa (ANGA) (ASECNA) and the Southern Positioning Augmentation Network (SouthPAN) (Australia and New Zealand) are also under development to provide these services.

6.2.3 An SBAS may provide accurate and reliable service outside the defined service area(s). The ranging, satellite status, basic differential corrections and ionosphere-free differential correction functions are usable throughout the entire coverage area. The performance of these functions may be technically adequate to support en-route, terminal and non-precision approach operations by providing monitoring and integrity data for core satellite constellations and/or SBAS satellites. L1 SBAS mitigates errors which cannot be monitored by its ground network through message Type 27 or message Type 28. DFMC SBAS mitigates errors that cannot be monitored by its ground network through message Type 32.

6.2.4 Each State is responsible for approving SBAS-based operations within its airspace. In some cases, States will field SBAS ground infrastructure linked to an SBAS. In other cases, States may approve service areas and SBAS-based operations using available SBAS signals. In either case, each State is responsible for ensuring that SBAS meets the requirements of Chapter 3, 3.7.2.4, within its airspace, and that appropriate operational status reporting and NOTAMs are provided for its airspace.

6.2.5 Before approving SBAS-based operations, a State must determine that the proposed operations are adequately supported by one or more SBASs. This determination should focus on the practicality of using SBAS signals, taking into account the relative location of the SBAS ground network. This could involve working with the State(s) or organization(s) responsible for operating the SBASs. For an airspace located relatively far from an SBAS ground network, the number of visible satellites for which that SBAS provides status and basic corrections would be reduced. Since L1 SBAS receivers are able to use data from two SBASs simultaneously, and to use autonomous fault detection and exclusion when necessary, availability may still be sufficient for approval of operations. Unlike the L1 SBAS service that can only provide ionospheric delay estimate near the SBAS reference network, the ionosphere-free differential corrections will provide a valid solution in airspace located relatively far from the SBAS reference network. In most cases, there will be overlap of DFMC services from neighbouring SBAS systems and users will be able to transition directly from one SBAS system to another. There is no benefit from the combination of ranging sources corrected by two or more SBAS services, but there would be additional error bounding to account for potential differences among SBAS services. Therefore, the use of multiple SBAS is not permitted when using dual-frequency service.

6.2.6 Before publishing procedures based on SBAS signals, a State is expected to provide a status monitoring and NOTAM system. To determine the effect of a system element failure on service, a mathematical service volume model is to be used. The State can either obtain the model from the SBAS operator or develop its own model. Using the current and forecast status data of the basic system elements, and the locations where the State has approved operations, the model would identify airspace and airports where service outages are expected, and it could be used to originate NOTAMs. The system element status data (current and forecast) required for the model could be obtained via a bilateral arrangement with the SBAS service provider, or via connection to a real time “broadcast” of the data if the SBAS service provider chooses to provide data in this way.

6.2.7 Participating States or regions will coordinate through ICAO to ensure that SBAS provides seamless global coverage, taking into account Recommendation 2.2/2 b) of the Thirteenth Air Navigation Conference, which calls for States to avoid, in principle, prohibiting the use of available GNSS elements if they perform according to ICAO SARPs and can meet all safety and regulatory requirements for the intended operations.

6.2.8 As the SBAS satellite coverages (footprints) overlap, it will be necessary for SBAS equipment to handle selection and transition mechanisms among the SBASs. As a minimum, the SBAS airborne receivers must be able to operate within the coverage of any SBAS. It is possible for an L1-only SBAS provider to monitor and send integrity and correction data for a geostationary orbit satellite that belongs to another SBAS service provider. For L1 SBAS, augmenting ranging SBAS satellites can improve availability by adding ranging sources for user receivers that can track additional SBAS satellites. This improvement does not require any interconnection between SBAS systems and should be accomplished by all SBAS service providers. For DFMC SBAS, the ranging signal from the SBAS PRN in use may be used. Ranging signal from other SBAS satellite(s) from the same provider may be used with Type 32 message augmentation. Ranging signal from other SBAS providers cannot be used.

6.2.9 Other levels of integration can be implemented using a unique connection between the SBAS networks (e.g. separate satellite communication). In this case, SBASs can exchange either raw satellite measurements from one or more reference stations or processed data (corrections or integrity data) from their master stations. This information can be used to improve system robustness and accuracy through data averaging, or integrity through a cross check mechanism. Availability will also be improved within the service areas, and the technical performance will meet the GNSS SARPs throughout the entire coverage (i.e. monitoring of satellites ephemeris would be improved). Finally, SBAS control and status data could be exchanged to improve system maintenance.

6.3 Integrity

6.3.1 The provisions for integrity are complex, as some attributes are determined within the SBAS ground network and transmitted in the signal-in-space, while other attributes are determined within the SBAS equipment on the aircraft. For the satellite status, basic corrections functions and ionosphere-free differential corrections functions, an error uncertainty for the

ephemeris and clock corrections is determined by the SBAS ground network. This uncertainty is modelled by the variance of a zero-mean, normal distribution that describes the user differential range error (UDRE) or dual-frequency range error (DFRE) for each ranging source after application of fast (L1 SBAS) and long-term (L1 and DFMC SBAS) corrections and excluding atmospheric effects and receiver errors.

6.3.2 For the precise differential function, an error uncertainty for the ionospheric correction is determined. This uncertainty is modelled by the variance of a zero-mean, normal distribution that describes the L1 residual user ionospheric range error (UIRE) for each ranging source after application of ionospheric corrections. This variance is determined from an ionospheric model using the broadcast grid ionospheric vertical error (GIVE).

6.3.3 There is a finite probability that an SBAS receiver would not receive an SBAS message. In order to continue navigation in that case, the SBAS broadcasts degradation parameters in the signal-in-space. These parameters are used in a number of mathematical models that characterize the additional residual error from basic, precise and ionosphere-free differential corrections induced by using old but active data. These models are used to modify the UDRE/DFRE variance and the UIRE variance as appropriate.

6.3.4 The individual error uncertainties described above are used by the receiver to compute an error model of the navigation solution. This is done by projecting the pseudo-range error models to the position domain. The horizontal protection level (HPL) provides a bound on the horizontal position error with a probability derived from the integrity requirement. Similarly, the vertical protection level (VPL) provides a bound on the vertical position. If the computed HPL exceeds the horizontal alert limit (HAL) for a particular operation, SBAS integrity is not adequate to support that operation. The same is true for precision approach and APV operations, if the VPL exceeds the vertical alert limit (VAL).

6.3.5 One of the most challenging tasks for an SBAS provider is to determine UDRE/GIVE or DFRE variances so that the protection level integrity requirements are met without having an impact on availability. The performance of an individual SBAS depends on the network configuration, geographical extent and density, the type and quality of measurements used and the algorithms used to process the data. General methods for determining the model variance are described in section 14.

6.3.6 *Residual clock and ephemeris error (σ_{UDRE})*. The residual clock error is well characterized by a zero-mean, normal distribution since there are many receivers that contribute to this error. The residual ephemeris error depends upon the user location. For the precise differential function, the SBAS provider will ensure that the residual error for all users within a defined service area is reflected in the σ_{UDRE}. For the basic differential function, the residual ephemeris error should be evaluated and may be determined to be negligible.

6.3.7 *Ionosphere-free residual clock and ephemeris error (σ_{DFRE})*. The residual clock error is well characterized by a zero-mean, normal distribution since there are many receivers that contribute to this error. The residual ephemeris error depends upon the user location. For the ionosphere-free differential correction function, the SBAS provider will ensure that the residual error for all users within a coverage area is reflected in the σ_{DFRE}. The residual error needs to account for the increased noise in the ionosphere-free dual-frequency combination.

6.3.8 *Vertical ionospheric error (σ_{GIVE})*. The residual ionospheric error is well represented by a zero-mean, normal distribution since there are many receivers that contribute to the ionospheric estimate. Errors come from the measurement noise, the ionospheric model and the spatial decorrelation of the ionosphere. The position error caused by ionospheric error is mitigated by the positive correlation of the ionosphere itself. In addition, the residual ionospheric error distribution has truncated tails, i.e. the ionosphere cannot create a negative delay, and has a maximum delay.

6.3.9 *Aircraft element errors*. The combined multipath and receiver contribution is bounded as described in section 14. This error can be divided into multipath and receiver contribution as defined in Appendix B, 3.6.5.5.1, and the standard model for multipath described in Appendix B, 3.6.5.5.1.1.2 may be used. The receiver contribution can be taken from the accuracy requirement (Appendix B, 3.5.8.2, 3.5.8.4.1 and 3.5.15.3.2) and extrapolated to typical signal conditions. Specifically, the aircraft can be assumed to have $\sigma^2_{air} = \sigma^2_{receiver} + \sigma^2_{multipath}$, where it is assumed that $\sigma_{receiver}$ is defined by the RMS_{pr_air} specified for GBAS Airborne Accuracy Designator A equipment, and $\sigma_{multipath}$ is defined in Appendix B, 3.6.5.5.1 for L1 SBAS equipment and 3.5.15.3.4.1 for DFMC SBAS equipment. The aircraft contribution to multipath includes the effects of

reflections from the aircraft itself. Multipath errors resulting from reflections from other objects are not included. If experience indicates that these errors are not negligible, they must be accounted for operationally. The standard multipath model in Appendix B, 3.5.15.3.4.1 accounts for multipath error in the ionosphere-free combination.

6.3.10 *Tropospheric error*. The receiver must use a model to correct for tropospheric effects. The residual error of the model is constrained by the maximum bias and variance defined in Appendix B, 3.5.8.4.2, 3.5.8.4.3 and 3.5.15.3.4. The effects of this mean must be accounted for by the ground subsystem. The airborne user applies a specified model for the residual tropospheric error (σ_{tropo}).

6.4 RF characteristics

6.4.1 *Minimum SBAS L1 GEO signal power level*. The minimum aircraft equipment (e.g. RTCA/DO-229D with Change 1) is required to operate with a minimum signal strength of –164 dBW at the antenna port in the presence of non-RNSS interference (Appendix B, 3.7) and an aggregate RNSS noise density of –172.8 dBm/Hz. In the presence of interference, receivers may not have reliable tracking performance for a signal strength at the antenna port below –164 dBW (e.g. with GEO satellites placed in orbit prior to 2014). A GEO that delivers a signal power below –164 dBW at the receiving antenna port at 5 degree elevation on the ground can be used to ensure signal tracking in a service area contained in a coverage area defined by a minimum elevation angle that is greater than 5 degrees (e.g. 10 degrees). In this case, advantage is taken from the gain characteristic of the minimum standard (e.g. RTCA/DO-301) antenna to perform a trade-off between the GEO signal power and the size of the service area in which a trackable signal needs to be ensured. When planning for the introduction of new operations based on SBAS, States are expected to conduct an assessment of the signal power level as compared to the level interference from RNSS and non-RNSS sources. If the outcome of this analysis indicates that the level of interference is adequate to operate, then operations can be authorized.

6.4.2 *Minimum SBAS L5 signal power level*. The minimum aircraft equipment is required to operate with a minimum signal strength of –158 dBW at the antenna port in the presence of non-RNSS interference (Appendix B, 3.7) and an aggregate RNSS noise density of –171.4 dBm/Hz. An SBAS satellite that delivers a signal power below –158 dBW at the receiving antenna port at 5 degree elevation on the ground can be used to ensure signal tracking in a service area contained in a coverage area defined by a minimum elevation angle that is greater than 5 degrees (e.g. 10 degrees). In this case, advantage is taken from the gain characteristic of the standard antenna to perform a trade-off between the SBAS satellite power and the size of the service area in which a trackable signal needs to be ensured. When planning for the introduction of new operations based on SBAS, States are expected to conduct an assessment of the signal power level as compared to the level of interference from RNSS and non-RNSS sources. If the outcome of this analysis indicates that the level of interference is adequate to operate, then operations can be authorized.

6.4.3 *SBAS network time*. SBAS network time is a time reference maintained by SBAS for the purpose of defining corrections. When using corrections, the user's solution for time is relative to the SBAS network time rather than core satellite constellation system time. In L1 SBAS only, if corrections are not applied, the position solution will be relative to a composite core satellite constellation/SBAS network time depending on the satellites used and the resulting accuracy will be affected by the difference among them. Mix of uncorrected and SBAS corrected measurement is not allowed in DFMC SBAS. L1 SBAS and DFMC SBAS services are independent. The SBAS network time used for L1 SBAS and that used for DFMC SBAS may be different. In DFMC SBAS, a time reference identifier parameter is broadcast in Type 37 message to inform DFMC user about the core constellation time reference used to steer the SBAS network time in DFMC SBAS (see Chapter 3, 3.7.3.4.7.2 which specifies the maximum time difference between SNT and core constellation reference time). It refers to the time reference of a GNSS constellation, which will be assumed to be the constellation of reference when computing SBAS user position and estimating time offset for other constellation augmented by the SBAS system.

6.4.4 *SBAS convolutional and bi-binary encoding*. Information on the convolutional coding and decoding of L1 SBAS messages can be found in RTCA/DO-229D with Change 1, Appendix A. Information on the convolutional coding and decoding of DFMC SBAS messages can be found in EUROCAE/ED-259, Appendix A. The SBAS L5 signals use bi-binary (Manchester) encoding (see section 1). SBAS L5 signals without bi-binary encoding are suitable for testing and validation purposes only.

Figure D-19 shows the convention of the bi-binary encoding, where a "0" is expressed by a low-to-high transition ("0" during the first half of the bit period and "1" during the second half) and where a "1" is expressed by a high-to-low transition ("1" during the first half of the bit period and "0" during the second half).

6.4.5 *Message timing*. The users' convolutional decoders will introduce a fixed delay that depends on their respective algorithms (usually 5 constraint lengths, or 35 bits), for which they must compensate to determine SBAS network time (SNT) from the received signal.

6.4.6 *SBAS signal characteristics*. Differences between the relative phase and group delay characteristics of SBAS signals, as compared to GPS signals, can create a relative range bias error in the receiver tracking algorithms. The SBAS service provider is expected to account for this error, as it affects receivers with tracking characteristics within the tracking constraints in Attachment D, 8.11 and Appendix B, 3.5.15.1.1.3. For GEOs supporting L1 SBAS ranging for which the on-board RF filter characteristics have been published in RTCA/DO-229D with Change 1, Appendix T, the SBAS service providers are expected to ensure that the UDREs bound the residual errors including the maximum range bias errors specified in RTCA/DO-229D with Change 1. For other SBAS satellites supporting L1 SBAS ranging or DFMC SBAS ranging, the SBAS service providers are expected to work with equipment manufacturers in order to determine, through analysis, the maximum range bias errors that can be expected from existing receivers when they process these specific satellites. This effect can be minimized by ensuring that the satellites have a wide transmission bandwidth and small group delay across the pass band. Additionally, the DFMC SBAS tracking error in Appendix B, 3.5.15.4.1 is developed with the presumption that the SBAS L1 signal supporting DFMC SBAS ranging is a wideband signal. SBAS service providers are expected to ensure that the DFREs bound the residual errors including tracking bias errors for the DFMC SBAS ranging signals.

6.4.7 *SBAS pseudo-random noise (PRN) codes*. Receivers compliant with RTCA DO-229D with Change 1 and earlier versions only search for PRN codes in the range 120 to 138 only (out of the full 120 to 158 range in Table B-21), and therefore will not acquire and track SBAS L1 signals identified by a PRN code in the range 139 to 158. Receivers compliant with DO-229E and subsequent versions can acquire and track SBAS L1 signals identified by all PRN codes in Table B-21. EUROCAE/ED-259, Appendix A, provides a method for SBAS L5 PRN code generation.

6.4.8 *SBAS L5 carrier phase noise*. A practical way to comply with the SBAS L5 code carrier noise requirement would be to comply with the following table specification:

Table D-4. L5 carrier phase noise

Frequency offset from L5 carrier (Hz)	*Phase noise relative to the carrier (dBc/Hz)*
0	0
1	-19.5
5	-47.5
10	-52.5
10^2	-66.5
10^3	-74.5
10^4	-85.5
10^5	-90.5
$3x10^5$	-90.5
Greater than 10^6	-92.5

6.4.9 *Cross-correlation loss*. Cross-correlation loss is defined as the ratio of the following two correlation outputs: (1)

the actual received signal correlated against a perfect unfiltered reference signal; and (2) a perfect unfiltered signal normalized to the same total power as the signal in case (1), correlated against a perfect unfiltered reference signal. The correlation loss can be calculated as indicated in the equation below:

$$-20\ Log_{10}\left[\frac{C_{XY}}{\sqrt{C_{XX}}\ \sqrt{C_{YY}}}\right] < 1dB$$

where "C_{XX}" is the value resulting from correlation of the unfiltered reference signal with itself, "C_{YY}" is the value resulting from correlation of the actual received signal with itself, and "C_{XY}" is the value resulting from correlation of the actual received signal with the unfiltered reference signal when these two signals are optimally aligned for maximal cross correlation. The bracketed term above is the correlation coefficient between the actual received signal and the unfiltered reference signal.

6.5 Data characteristics on SBAS L1 signal

6.5.1 *SBAS messages*. Due to the limited bandwidth, SBAS L1 signal data is encoded in messages that are designed to minimize the required data throughput. RTCA/DO-229D with Change 1, Appendix A, provides detailed specifications for SBAS messages.

6.5.2 *Data broadcast intervals*. The maximum broadcast intervals between L1 SBAS messages are specified in Appendix B, Table B-92. These intervals are such that a user entering the L1 SBAS service broadcast area is able to output a corrected position along with SBAS-provided integrity information in a reasonable time. For en-route, terminal and NPA operations, all needed data will be received within 2 minutes, whereas for precision approach operations, it will take a maximum of 5 minutes. The maximum intervals between broadcasts do not warrant a particular level of accuracy performance as defined in Chapter 3, Table 3.7.2.4-1. In order to ensure a given accuracy performance, each service provider will adopt a set of broadcast intervals taking into account different parameters such as the type of constellations (e.g. GPS with SA, GPS without SA) or the ionospheric activity.

6.5.3 *Time-to-alert*. Figure D-2 provides explanatory material for the allocation of the total time-to-alert defined in Chapter 3, Table 3.7.2.4-1. The time-to-alert requirements in Appendix B, 3.5.7.3.1, 3.5.7.4.1 and 3.5.7.5.1 (corresponding to the GNSS satellite status, basic differential correction and precise differential correction functions, respectively) include both the ground and space allocations shown in Figure D-2.

6.5.4 *Tropospheric function*. Because tropospheric refraction is a local phenomenon, users will compute their own tropospheric delay corrections. A tropospheric delay estimate for precision approach is described in RTCA/DO-229D with Change 1, although other models can be used.

6.5.5 *Multipath considerations*. Multipath is one of the largest contributors to positioning errors for L1 SBAS affecting both ground and airborne elements. For SBAS ground elements, emphasis should be placed on reducing or mitigating the effects of multipath as much as possible so that the signal-in-space uncertainties will be small. Many mitigation techniques have been studied from both theoretical and experimental perspectives. The best approach for implementing SBAS reference stations with minimal multipath errors is to:

a) ensure that an antenna with multipath reduction features is chosen;

b) consider the use of ground plane techniques;

c) ensure that the antenna is placed in a location with low multipath effects; and

d) use multipath-reducing receiver hardware and processing techniques.

6.5.6 *GLONASS issue of data*. Since the existing GLONASS design does not provide a uniquely defined identifier for

sets of ephemeris and clock data, L1 SBAS will use a specific mechanism to avoid any ambiguity in the application of the broadcast corrections. This mechanism is explained in Figure D-3. The definitions of the latency time and validity interval along with the associated coding requirements can be found in Appendix B, 3.5.4. The user can apply the long-term corrections received only if the set of GLONASS ephemeris and clock data used on board have been received within the validity interval.

6.5.7 *δ_{UDRE} indicator inside the service area*. Equipment built to RTCA/DO-229 standards will apply $\delta_{UDRE} = 1$ until receipt of the complete Type 27 service area messages. Since the δ_{UDRE} indicator inside the service area is set to 0 as required in Appendix B, 3.5.7.6.2.1, SBAS user equipment operating inside the service area will generate the correct integrity bound in the transient phase, using a $\delta_{UDRE} = 1$, before reception of the complete set of Type 27 messages.

6.5.8 *Day crossover considerations*. The parameters t_0,GEO, $t_{almanac}$ and $t_{i,LT}$ are expressed in seconds of day. Equipment standard assumes that those parameters are adjusted by SBAS for day crossover. SBAS needs to set those parameters to mitigate misinterpretation by SBAS equipment.

6.6 SBAS final approach segment (FAS) data block

6.6.1 The SBAS final approach segment (FAS) data block for a particular approach procedure is as shown in Appendix B, 3.5.8.4.2.6.1 and Table B-96, with additional description of fields used by DFMC SBAS user equipment in Appendix B, 3.5.15.3.5. The format is the same as the GBAS FAS data block defined in Appendix B, 3.6.4.5.1 and Table B-134, with the following exceptions. The SBAS FAS data block also contains the HAL and VAL to be used for the approach procedure as described in 6.3.4. SBAS user equipment interprets certain fields differently from GBAS user equipment and DFMC SBAS user equipment uses two fields not used by L1 SBAS user equipment. The new fields have been defined such that existing FAS data blocks designed for the L1 SBAS service are compatible for use with DFMC SBAS user equipment. FAS data blocks that have APD codings other than 0 are only for use by and should only be installed on aircraft with DFMC SBAS user equipment.

6.6.2 FAS data blocks for SBAS and some GBAS approaches are held within a common on-board database supporting both SBAS and GBAS. Within this database, channel assignments must be unique for each approach and coordinated with civil authorities. States are responsible for providing the FAS data for incorporation into the database.

6.6.3 An example of the coding of FAS data block for SBAS is provided in Table D-5. This example illustrates the coding of the various application parameters, including the cyclic redundancy check (CRC). The engineering values for the message parameters in the table illustrate the message coding process.

6.6.4 DFMC SBAS user equipment uses the operation type field from the FAS data block to determine the required SBAS service provider identifier (SPID) for the approach. The DFMC SBAS service broadcasts a 5-bit SPID while the FAS data block only supports a 4-bit SPID. To differentiate the additional 16 SPID values, the DFMC SBAS user equipment looks for the operation type field. User equipment that receives an operation type of 0 or does not read the operation type field will interpret the SPID as published with values between 0 and 15. User equipment that receives an operation type of 8 will add 16 to the value of the SPID from the FAS data block, resulting in a range from 16 to 31. This expanded range can only be broadcast on the DFMC SBAS service and is intended for use by SBAS systems that only provide a DFMC SBAS service.

Table D-5. Example of an SBAS FAS data block

DATA CONTENT DESCRIPTION	*BITS USED*	*RANGE OF VALUES*	*RESOLUTION*	*CODING RULES (Note 5)*	*PROCEDURE DESIGN VALUES PROVIDED*	*FAS DB VALUE USED*	*BINARY DEFINITION*	*BINARY REPRESENTATION (Note 1)*	*HEXADECIMAL REPRESENTATION*
Operation Type	4	[0..15]	1	0: Straight-in approach procedure 1-7: Spare 8: Straight-in approach with SBAS service provider ID extension 9-15: Spare (Note 1)	Straight-In	0	$m_4..m_1$	0000	08

DATA CONTENT DESCRIPTION	*BITS USED*	*RANGE OF VALUES*	*RESOLUTION*	*CODING RULES (Note 5)*	*PROCEDURE DESIGN VALUES PROVIDED*	*FAS DB VALUE USED*	*BINARY DEFINITION*	*BINARY REPRESENTATION (Note 1)*	*HEXADECIMAL REPRESENTATION*
SBAS service provider ID	4	[0..15]	1	For operation type = 0 0 – 13: See Table B-25 14 : GBAS only 15 : Any SBAS provider For operation type = 8 0 – 15: SBAS service provider ID 16 to 31 (See Table B-25)	EGNOS	1	$m_8..m_5$	0001	
Airport ID	32	$\alpha_1\alpha_2\alpha_3\alpha_4$	-	α_1, α_2, α_3 = [0..9, A..Z] $\alpha 4$ = [<space>, 0..9, A..Z] D_{OUT} = ASCII value & 3F	LFBO	LFBO	$m_{40}..m_{33}$ $m_{32}..m_{25}$ $m_{24}..m_{17}$ $m_{16}..m_9$	'L' **00** 001100 'F' **00** 000110 'B' **00** 000010 'O' **00** 001111 (*Note 2*)	F0 40 60 30
Runway number	6	[01..36]	1	-	14	14	$m_{46}..m_{41}$	001110	72
Runway letter	2	[0..3]	1	0 : No letter 1 : Right I 2 : Centre (C) 3 : Left (L)	R	1	m_{48} m_{47}	01	
Approach performance designator	3	[0..7]	1	See Appendix B, 3.5.15.3.5	0 (L1 SBAS or DFMC SBAS)	0	$m_{51}..m_{49}$	000	0B
Route indicator	5	α	-	α = [<space>, A..Z] α ≠ I and α ≠ O	Z	Z	$m_{56}..m_{52}$	11010	
Reference path data selector	8	[0..48]	-	Not used by SBAS	0 (default value)	0	$m_{64}..m_{57}$	00000000	00
Reference path identifier	32	$\alpha_1\alpha_2\alpha_3\alpha_4$	-	α_1 = [E, M, W] α_2, α_3 = [0..9] α_4 = [<space>, A, B, D..K, M..Q, S..Z] D_{OUT} = ASCII value & 3F	E14A	E14A	$m_{96}..m_{89}$ $m_{88}..m_{81}$ $m_{80}..m_{73}$ $m_{72}..m_{65}$	'E' **00** 000101 '1' **00** 110001 '4' **00** 110100 'A' **00** 000001 (*Note 2*)	80 2C 8C A0
LTP/FTP latitude	32	[-90.0°.. 90.0°]	0.0005 arcsec	$D_{CONV1} = D_{IN}$ -> rounding method (*Note 3*) $D_{CONV2} = D_{CONV1}$ -> decimal (sec) $D_{OUT} = D_{CONV2}$ x 2 000 N : D_{OUT} S : Two's complement (D_{OUT})	D_{IN} = 43°38'38.8103" N	D_{CONV1} = 43°38'38.8105" N D_{CONV2} = 157118.8105 sec D_{OUT} = 314 237 621	$m_{128}..m_{121}$ $m_{120}..m_{113}$ $m_{112}..m_{105}$ $m_{104}..m_{97}$	00010010 10111010 11100010 10110101	AD 47 5D 48
LTP/FTP longitude	32	[-180.0°.. 180.0°]	0.0005 arcsec	$D_{CONV1} = D_{IN}$ -> rounding method (*Note 3*) $D_{CONV2} = D_{CONV1}$ -> decimal (sec) $D_{OUT} = D_{CONV2}$ x 2 000 E : D_{OUT} W : Two's complement (D_{OUT})	D_{IN} = 001°20'45.3591" E	D_{CONV1} = 001°20'45.3590" E D_{CONV2} = 4845.359 sec D_{OUT} = 9 690 718	$m_{160}..m_{153}$ $m_{152}..m_{145}$ $m_{144}..m_{137}$ $m_{136}..m_{129}$	00000000 10010011 11011110 01011110	7A 7B C9 00
LTP/FTP height	16	[-512.. 6041.5]	0.1m	D_{CONV} = round (D_{IN}, resolution) $D_{OUT} = (D_{IN} + 512) \times 10$	D_{IN} = 148.74m	D_{CONV} = 148.7 D_{OUT} = 6 607	$m_{176}..m_{169}$ $m_{168}..m_{161}$	00011001 11001111	F3 98
ΔFPAP latitude	24	[-1.0°..1.0°]	0.0005 arcsec	$D_{CONV1} = D_{IN}$ -> rounding method (*Note 3*) $D_{CONV2} = D_{CONV1}$ -> decimal (sec) $D_{OUT} = D_{CONV2}$ x 2 000 + : D_{OUT} - : Two's complement (D_{OUT})	D_{IN} = -0°01'37.8973"	D_{CONV1} = -00°01'37.8975" D_{CONV2} = -97.8975" D_{OUT} = Two's complement (195795) D_{OUT} = 16 581 421	$m_{200}..m_{193}$ $m_{192}..m_{185}$ $m_{184}..m_{177}$	11111101 00000011 00101101	B4 C0 BF
ΔFPAP longitude	24	[-1.0°..1.0°]	0.0005 arcsec	$D_{CONV1} = D_{IN}$ -> rounding method (*Note 3*) $D_{CONV2} = D_{CONV1}$ -> decimal (sec) $D_{OUT} = D_{CONV2}$ x 2 000	D_{IN} = 0°01'41.9329"	D_{CONV1} = 0°01'41.9330" D_{CONV2} = 101.9330" D_{OUT} =	$m_{224}..m_{217}$ $m_{216}..m_{209}$ $m_{208}..m_{201}$	00000011 00011100 01011010	5A 38 C0

DATA CONTENT DESCRIPTION	*BITS USED*	*RANGE OF VALUES*	*RESOLUTION*	*CODING RULES (Note 5)*	*PROCEDURE DESIGN VALUES PROVIDED*	*FAS DB VALUE USED*	*BINARY DEFINITION*	*BINARY REPRESENTATION (Note 1)*	*HEXADECIMAL REPRESENTATION*
				+ : D_{OUT} - : Two's complement (D_{OUT})		203 866			
Approach TCH	15	[0..1638.35m] [0..3276.7ft]	0.05m 0.1ft	D_{CONV} = round (D_{IN}, resolution) m : $D_{OUT} = D_{IN}$ x 20 ft : $D_{OUT} = D_{IN}$ x 10	D_{IN} = 15.00m	D_{CONV} = 15.00m D_{OUT} = 300	$m_{239}..m_{233}$ $m_{232}..m_{225}$	0000001 00101100	34 81
Approach TCH units selector	1	[0,1]	-	0 : feet 1 : metres	m	1	m_{240}	1	
Glide path angle (GPA)	16	[0..90.00°]	0.01°	D_{CONV} = round (D_{IN}, resolution) $D_{OUT} = D_{IN}$ x 100	D_{IN} = 3.00°	D_{CONV} = 3.00° D_{OUT} = 300	$m_{256}..m_{249}$ $m_{248}..m_{241}$	00000001 00101100	34 80
Course width	8	[80.00m.. 143.75m]	0.25m	D_{CONV} = round (D_{IN}, resolution) D_{OUT} = (D_{CONV} - 80) x 4	D_{IN} = 105.00m	D_{CONV} = 105.00m D_{OUT} = 100	$m_{264}..m_{257}$	01100100	26
ΔLength offset	8	[0..2032m]	8m	D_{CONV} = round (D_{IN}, resolution) D_{OUT} = (integer division of D_{CONV} by 8) + 1 D_{OUT} = 255 : not provided value	D_{IN} = 284.86m	D_{CONV} = 288m D_{OUT} = 36	$m_{272}..m_{265}$	00100100	24
Horizontal alert limit (HAL)	8	[0..50.8m]	0.2m	D_{CONV} = round (D_{IN}, resolution) $D_{OUT} = D_{IN}$ * 5	D_{IN} = 40.0m	D_{CONV} = 40.0m D_{OUT} = 200	$m_{280}..m_{273}$	11001000	13
Vertical alert limit (VAL)	8	[0..50.8m]	0.2m	D_{CONV} = round (D_{IN}, resolution) D_{OUT} = Value * 5 D_{OUT} = 0 : vertical deviations cannot be used	D_{IN} = 50.0m	D_{CONV} = 50.0m D_{OUT} = 250	$m_{288}..m_{281}$	11111010	5F
Final approach segment CRC	32	[0..2^{32}-1]		D_{OUT} = remainder (P(x) / Q(x))	-	-	$r_{32}..r_{25}$ $r_{24}..r_{17}$ $r_{16}..r_{9}$ $r_{8}..r_{1}$	10101110 11000011 01100100 10001111	75 C3 26 F1 (*Note 4*)

Notes.
1. *The rightmost bit is the LSB of the binary parameter value and is the first bit transmitted to the CRC calculator.*
2. *The two most significant bits of each byte are set to 0 (see bold characters).*
3. *The rounding methodology is provided in the PANS-OPS (Doc 8168) Volume II.*
4. *The FAS CRC value is displayed in the order $r_{25}..r_{32}$, $r_{17}..r_{24}$, $r_{9}..r_{16}$, $r_{1}..r_{8}$ where r_i is th i^{th} coefficient of the remainder R(x) as defined in Appendix B, 3.9 .*
5. *D_{IN} : raw data value, D_{CONV} : converted data value according to coding rules, D_{OUT} : coded data value.*

6.6.5 DFMC SBAS user equipment uses the approach performance designator (APD) field to identify which of the SBAS services provide adequate performance to support the procedure identified in the FAS data block. The service modes are the L1 SBAS service, the DFMC SBAS when one or more augmented constellations are usable, and the DFMC SBAS service when two or more augmented constellations are usable. Constellations are usable when the SBAS provides augmentation and the user equipment can use the augmentation. For procedures using APV performance level, the user equipment can check the computed protection level(s) against the associated alert limit(s) to determine suitability of the navigation. For procedures using the Category 1 performance level, the integrity referred to in Chapter 3, Table 3.7.2.4.-1, Note 2 requires a system-specific safety analysis when the VAL is set to be greater than 10 m. This includes a performance assessment that the SBAS service provider makes, which the ANSP can use to support the decision on the APD coding for published procedures. Since the DFMC SBAS service will have a significantly larger service volume than the L1 SBAS service, ANSPs will be able to publish approach procedures based on DFMC SBAS services that an associated L1 SBAS service cannot fully support. In some circumstances, the L1 SBAS service might not meet the availability or continuity for the approach but would otherwise meet the performance requirements and could be used, if available. ANSPs can then publish the procedure with APD codings of 5 or 6 based on the L1 SBAS service performance provided by the SBAS service provider. In some circumstances, when the L1 SBAS service does not meet the criteria in 3.3.9 or when the ANSP determines that the L1 SBAS service is not suitable for use, ANSPs can then publish procedures with APD codings of 1 or 2. The table below provides an indication of when the different APD codings are appropriate. ANSPs code DFMC SBAS procedure with an APD of 1 or 2 when there is no L1 SBAS service deemed to be available in support of flying the published approach.

0	• Any procedure based on the APV performance level when the L1 SBAS service meets availability and continuity. • Any procedure using the Category 1 performance level when the L1 SBAS service meets availability, continuity, and the system-specific safety assessment.
1	• Any procedure based on the APV performance level when the ANSP wants to control the operation to DFMC mode only with at least one constellation. • Any procedure based on the Category 1 performance level when the system specific safety assessment is met with the DFMC SBAS service with at least one constellation, but would not be met with an L1 SBAS service.
2	• Any procedure based on the APV performance level when the ANSP wants to control the operation to DFMC mode only and two or more constellations are required to meet the availability and continuity requirements with the DFMC SBAS service. • Any procedure based on the Category 1 performance level when the system specific safety assessment is met with the DFMC SBAS service but would not be met with an L1 SBAS service, and two or more constellations are required to meet the availability and continuity requirements with the DFMC SBAS service.
5	• Any procedure based on the APV performance level when the L1 SBAS service is not expected to meet availability or continuity while DFMC SBAS service meets availability and continuity with at least one constellation. • Any procedure based on the Category 1 performance level when both the DFMC and L1 SBAS services satisfy the system specific safety assessment, although the L1 SBAS service is not expected to meet availability and/or continuity.
6	• Any procedure based on the APV performance level when availability and continuity are met only using a DFMC SBAS service augmenting more than one constellation. Neither single constellation DFMC SBAS, nor a L1 SBAS service are expected to meet availability and continuity. • Any procedure based on the Category 1 performance level when availability and continuity are met only using a DFMC SBAS service augmenting more than one constellation. Neither single constellation DFMC SBAS, nor a L1 SBAS service are expected to meet availability and/or continuity, but all services meet the system specific safety assessment.

6.6.6 User equipment not designed to process DFMC SBAS (e.g. compliant with RTCA/DO-229 standards) is not required to use the APD field (see Chapter 3, Appendix B, 3.5.8.4.2.6.1) whereas DFMC SBAS equipment uses this field. SBAS procedures developed for L1 SBAS service use an APD coded as 0. The 0 coding is therefore retained for procedures supported by both L1 SBAS and DFMC SBAS. SBAS user equipment not designed to process DFMC SBAS (e.g. compliant with RTCA/DO-229 standards) should only be used in combination with FAS data blocks with APD set to 0.

6.7 DFMC SBAS considerations

6.7.1 *Data broadcast intervals*. The maximum broadcast intervals between DFMC SBAS messages are specified in Appendix B, Table B-119. These intervals are such that a user entering the DMFC SBAS coverage area is able to output a corrected position along with SBAS-provided integrity information in a reasonable time. For en-route, terminal, NPA and precision approach operations, all needed data will be received within 3 minutes considering a maximum of 92 satellites set in

the DFMC SBAS mask. The maximum intervals between broadcasts do not warrant a particular level of accuracy performance as defined in Chapter 3, Table 3.7.2.4-1. In order to ensure a given accuracy performance, each service provider will adopt a set of broadcast intervals taking into account different parameters such as the number of constellations augmented and the number of SBAS satellites used by the service provider.

6.7.2 DFMC SBAS mask

6.7.2.1 *SBAS mask parameters*. Appendix B, Table B-99, provides the mapping between the DFMC SBAS satellite mask and GNSS satellites. It was decided to define specific satellites per constellation that could be augmented in DFMC SBAS. It concerns the GPS PRN numbers 1 to 32 and 120 to 158 (SBAS PRN), GLONASS ID number 1 to 37, Galileo SVID 1 to 36 and BDS ranging code number 1 to 37. If any constellation broadcasts a signal from a satellite identified with a parameter exceeding the ranges specified, this satellite is not eligible for DFMC SBAS augmentation. DFMC SBAS mask broadcast in Type 31 message is independent from the L1 SBAS mask broadcast in Type 1 message even if both services are delivered by an SBAS provider.

6.7.2.2 *SBAS mask transition*. The Standard does not specify the means to conduct a mask transition, therefore SBAS providers might choose different mask transition strategies. The user requires a valid mask to decode the integrity messages sent every six seconds in the Type 34, 35 or 36 messages. The user needs to receive a valid integrity message at least every 12 seconds in order to continue vertical operations, since the integrity parameters time out after 12 seconds. The satellite mask message (Type 31) is valid for 360 seconds. Therefore, one method for mask transitions would be to start the transition with the broadcast of a new Type 31 message while continuing to reference the old Type 31 in the integrity messages. After the second (or third) transmission of the new Type 31, the SBAS would transition the integrity messages to use the new satellite mask message. Users should be able to receive the new satellite mask with two or three transmissions and, in the meantime, would continue to operate normally. Other satellite mask transition options could be used such as: broadcast two integrity messages per cycle, one using the old satellite mask and one using the new satellite mask. SBAS providers need to assess the impact on continuity of service associated with the selected mechanism for SBAS mask transition when the user misses some messages.

6.7.3 *DFMC SBAS almanac and ephemeris generation*. The DFMC SBAS ephemeris and almanac messages were designed to provide a set of Keplerian parameters. This design enables using SBAS satellites whose orbits are not geostationary ones. The DFMC SBAS ephemeris and almanac messages enable the broadcast of satellites in MEO, HEO, IGSO and GEO orbital position. For some special case orbits, like low-inclination (geostationary) orbits or circular, zero eccentricity orbits, some of the Keplerian parameters are not well defined and therefore are not unique. Valid sets of Keplerian parameters exist and the user will be able to properly determine the satellite position provided the SBAS creates a valid set of parameters. SBAS providers can set the problematic parameters to constant values and the resulting ephemeris or almanac fit will converge to a good solution. The SBAS calculation removed the rate of right ascension of ascending node (RAAN) since the validity time of the ephemeris is short. Proper selection of the harmonic correction to argument of latitude can correct the error introduced by the removal of rate of RAAN for the geostationary satellite case. For the case of inclined orbits, the error is still not negligible and the compensation needs to include IDOT in combination with C_{us} and C_{uc}. These correction parameters were chosen in general as they allow for (roughly) along-track (C_{us}, C_{uc}) and cross-track (IDOT) corrections. Since the elimination of rate of RAAN is addressed by other parameters, a long parameter fitting interval may degrade accuracy of SBAS satellite position.

6.7.4 Integrity considerations

6.7.4.1 *General*. While the SBAS corrections remove the observable error, there remains some uncertainty on the residual error. The SBAS ground segment selects DFREs to broadcast to provide protection level bounding of the user's residual position errors after the application of SBAS corrections. The SBAS ground segment should account for the growth of the uncertainty in the nominal error that occurs when the user applies any received augmentation data that remains valid (has not timed out). The SBAS ground segment can choose and broadcast the associated degradation parameters to help maintain this bounding. This ensures that alerts will not be necessary under normal conditions over the validity period of the corrections and the DFREs. As the uncertainty increases, the SBAS can increase the DFREs to maintain adequate bounding. Provided that the

degradation parameters add sufficient bounding to meet the integrity requirements of Appendix B, 3.5.14.3, an increase in the current DFREs to cover nominal behaviour will not require an alert to protect users still applying older active values. As specified in Appendix B, 3.5.14.4.2, the SBAS system is required to monitor for satellite ranging faults and applicability of active SBAS data. During this monitoring, the SBAS is required to maintain integrity. For some monitored behaviours, like a clock run-off, if the errors are consistent with the SBAS system design and integrity analysis and the errors continue to be bounded by the active previously broadcast DFREs in combination with the degradation parameters, the SBAS should not broadcast an alert in order to maintain continuity. If the SBAS determines that old but active data with the degradations applied will not meet the integrity requirement, then the SBAS will broadcast an alert for that satellite. The alert could be in the form of larger DFREIs, up to and including the value indicating "Do Not Use in SBAS Mode". For other monitored cases, like detection of abnormal signal quality, the SBAS may be better served to broadcast an alert for the satellite directly to "Do Not Use in SBAS Mode".

6.7.4.2 *Mechanism*. There are several means to provide an alert. The alert sequence consists of a broadcast of at least four consecutive instances of data that will mitigate the misleading information. For individual satellites, it is often sufficient to broadcast larger DFREs to bound the error. This provides protection for all satellite data including that with longer time-out periods. Through this use of DFREs to alert, once the alerting condition has cleared, the nominal performance can be restored quickly by broadcasting nominal DFREs. The SBAS should expect that the user will miss messages and could be using any data that was previously broadcast that has not yet reached its time-out. When sending larger DFRE data to mitigate the misleading information, the SBAS sends the new DFRE in at least four consecutive messages. Since the DFRE terms are found in several different messages, it is possible to mix messages to achieve this repetition, such as four consecutive Type 32 messages or four consecutive Type 34/35/36 messages, or a combination of four consecutive Type 32 and integrity messages.

6.7.4.3 *Use of Type 0 message for alerts*. If necessary, to remove active data from the user receiver, SBAS can broadcast Type 0 messages. If the active data results in misleading information, the SBAS may use Type 0 message as an alert and send it in four consecutive messages. The reception of Type 0 messages will result in users dropping L5 data sent by the broadcasting satellite on the respective link. The use of Type 0 messages to alert individual satellites is generally not necessary as the use of larger DFREIs can provide for satellite alerts with less impact to the SBAS service.

6.7.4.4 *Missed messages and use of Type 0 messages*. Since the alert is required to be sent four times, a receiver might miss an alert if it misses four consecutive messages. For safety during approach operations, when the receiver misses four messages, it is required to invalidate all DFREIs/DFRECIs (see Appendix B, 3.5.15.1.4.15). The receiver could resume using correction data upon reception of an appropriate set of DFREIs with no other changes, as might occur with the reception of a Type 35 or Type 36 message. The SBAS should consider the possibility that the user receiver missed an alert sequence and should continue to broadcast DFREIs or DFRECIs consistent with the alerted value for all correction data that remains valid. This is also true following broadcast of a Type 0 message. If the user misses four or more messages, the user will only time out the DFREIs/DFRECIs and not remove other data. Therefore, the SBAS should consider how to resume nominal broadcast sequence following a Type 0 message alert sequence. The SBAS could continue to broadcast Type 0 messages or make impacted satellites unavailable until the misleading broadcast data has timed out. Transition from alerting through Type 0 messages to alerting through "Do Not Use for SBAS" may permit the receiver to use new SBAS data sooner.

6.7.5 Integrity data

6.7.5.1 *Integrity messages*. The DFMC SBAS concept defined three message types to provide integrity information with a repetition not to exceed six seconds. DFMC SBAS will broadcast integrity data for all satellites set in the satellite mask (Type 31 message), and can use any combination of these messages. The integrity messages are Types 34, 35 and 36. The Type 35 message provides DFREI information for the first 53 satellites in the Type 31 mask message and can be the sole message used when the SBAS augments 53 or fewer satellites. The Type 36 message is similar to the Type 35 message and is used together with the Type 35 message to broadcast DFREI information for satellites 54 to 92. Using a paired Type 35/36 message doubles the number of integrity messages being sent and might reduce the ability to send other information (e.g. correction information) more frequently compare to the minimum required. The Type 34 message is an option to provide integrity information for up to 92 satellites in a single SBAS message.

6.7.5.2 *Use of the integrity message*. The Type 34 message gives a means to provide integrity information for up to 92 satellites in a single message through the use of a 2-bit DFRE change indicator (DFRECI) instead of a 4-bit DFREI for each satellite. The Type 32 message provides the actual DFREI. For most operations, the DFREI will stay the same or only change by one increment during the time-out period of the DFREI. Therefore, the two-bit indicator has only four states indicating the following: 1) no change in DFREI, used to indicate that all broadcast, valid DFREIs remain valid; 2) increase the DFREI by one step (bump); 3) the Type 34 message will provide a new DFREI in one of seven slots allocated for DFREI updates in the message; or 4) indicate that the satellite is "Do Not Use for SBAS". The user could apply the indicator to the last received DFREI that has not timed out. The SBAS system design accounts for the user missing prior broadcast DFREI and/or DFRECI values. The SBAS cannot expect the user to have the most recent DFREI and monitors all old but active data transmitted to comply with the integrity requirement in Appendix B, 3.5.14.3.1. The SBAS can provide seven DFREIs in the Type 34 message. If the SBAS provider needs to increase more than seven DFREIs by more than one DFREI value, then the SBAS provider has two options, either set satellites that cannot be coded in the DFREI field to "Do Not Use for SBAS", or provide DFREIs using the Type 35 or Type 36 message. The SBAS provider can broadcast a DFRECI set to 0 corresponding to an existing higher DFREI value when a lower one could be broadcast. The DFRECI bump is not cumulative and can apply to any broadcast DFREI that could still be valid. Each Type 32 satellite correction message contains a DFREI. Any DFREI sent in a Type 32 message is valid until its time-out unless a new DFREI has been sent in multiple consecutive Types 34, 35 or 36 messages. When SBAS sends a new DFREI in all integrity messages broadcast during the DFREI validity period, SBAS can consider that the user will have the new DFREI and that the DFREI value broadcast in the previous Type 32 message has been replaced.

6.7.5.3 *Use of DFMC SBAS integrity message for alerting*. When an SBAS augments 53 or fewer satellites or uses the Type 34 message, the SBAS can send an alarm sequence using consecutive Type 34 or Type 35 messages and meet the alarm requirement. When an SBAS augments more than 53 satellites and chooses to use the Type 35/36 message pair, the alert logic becomes more complex. If all the satellites for which an alert needs to be sent are in the same message type, then that message type could be broadcast multiple times to meet the alert requirement. If the satellites that require an alert are contained across both the Type 35 and Type 36 messages, then it will be necessary to transition to use the Type 34 message or a Type 0 message to alert these satellites. The use of the Type 34 message is the preferred option to limit service disruption since the use of Type 0 message requires recovery of all SBAS data.

6.7.6 *DFREI scale table update*. The Type 37 message contains integrity related parameters which are used in the DFMC SBAS HPL and VPL equations. In particular, the Type 37 message contains a DFREI scale table which provides the link between broadcast DFREI values and the associated dual-frequency range error sigma value to use in the protection level computation. Since the Type 37 message content is related to SBAS design, the expectation is that the Type 37 message parameters will change rarely. However, when the Type 37 message content does change, the SBAS provider will need to ensure that SBAS receivers maintain integrity during the change. The SBAS provider can achieve this through the broadcast of Type 0 message to clear SBAS receivers of the old Type 37 message data, through the inflation of broadcast DFREI values for all satellites, by alerting specific satellites that might not maintain integrity, or with no change if SBAS receivers will maintain integrity when using any valid broadcast Type 37 message data.

6.7.7 *Time-to-alert*. Figure D-2 also provides explanatory material in the frame of DFMC SBAS for the allocation of the total time-to-alert defined in Chapter 3, Table 3.7.2.4-1.

6.7.8 *Tropospheric function*. A tropospheric delay estimate for precision approach is described in 6.5.4.

6.7.9 *Multipath considerations*. Multipath is the largest contributors to positioning errors for DFMC SBAS affecting both ground and airborne elements in particular due to ionosphere-free combination of SBAS corrected dual-frequency measurements. Mitigation techniques for SBAS ground elements, described in 6.5.5, are also valid in DFMC SBAS.

6.7.10 Week number rollover. The week number rollover count ($WNRO_{count}$) value of 15 indicates that parameter is not valid. The DFMC SBAS receiver may use the $WNRO_{count}$ parameter to solve the possible ambiguity of the truncated week number value (WN_x) transmitted through the GNSS navigation data if the SBAS broadcast a $WNRO_{count}$ between 0 and 14. In this case, the $WNRO_{count}$ is processed as follows:

- If the current truncated week number (WN_x) of the GNSS constellation designated by a Type 37 message is equal to the maximum value $\overline{WN} - 1$, and the current day number of week is 7 and the reference time t_a corresponds to day number of week 1 in the GNSS constellation reference time, the total number of weeks (WN) elapsed since the beginning of the GNSS reference time is given by:

$$WN = (WNRO_{count} - 1) \times \overline{WN} + WN_x = WNRO_{count} \times \overline{WN} - 1$$

- If the current truncated week number (WN_x) of the GNSS constellation designated by a Type 37 message is 0, and the current day number of week is 1 and the reference time t_a corresponds to day number of week 7 in the GNSS constellation reference time, the total number of weeks (WN) elapsed since the beginning of the GNSS constellation reference time is given by:

$$WN = (WNRO_{count} + 1) \times \overline{WN} + WN_x = (WNRO_{count} + 1) \times \overline{WN}$$

- Otherwise:

$$WN = WNRO_{count} \times \overline{WN} + WN_x$$

6.7.11 *Day crossovers considerations*. The parameters t_d, t_a and t_e are expressed in seconds of day, adjusted for day crossovers. The following mechanism can be used at the user level to determine the reference day for a t_d, t_a or t_e parameter received in a message broadcast at epoch t. Taking the case of a t_d parameter, with t and td expressed in seconds of day:

- If $-43\,200 \leq (t_d - t) \leq 43\,199$, t_d is expressed in seconds of the message broadcast day;
- If $(t_d - t) < -43\,200$, t_d is expressed in seconds of the next day of the message broadcast day; and
- If $(t_d - t) > 43\,199$, t_d is expressed in seconds of the previous day of the message broadcast day;

The previous mechanism can be applied to t_a and t_e, replacing t_d by t_a or t_e.

6.7.12 *Position computation in DFMC SBAS*. Appendix B, 3.5.12.4 provides the protocol to compute SBAS position out of two augmented constellations by an SBAS. Assuming that an SBAS augments N number of constellations, N being equal to three or more, the linearized weighted least square estimate X includes N - 2 additional elements for the time offsets between the additional constellation and the reference constellation 1. In addition, the observation matrix G, described in Appendix B, 3.5.12.4 c), is modified to integrate N - 2 additional columns of time parameters. Those time parameters equal 1 for all satellites of this specific constellation when setting the parameter for the column number corresponding to the time offset column of this constellation in X. Those time parameters equal 0 otherwise.

6.7.12.1 *Alternative observation matrix G*. The DFMC SBAS navigation solution can be computed with the following observation matrix G as an alternative to the one defined in Appendix B, 3.5.12.4:

$$G_i = [-\cos El_i \cdot \sin Az_i \quad -\cos El_i \cdot \cos Az_i \quad -\sin El_i \quad n_{i,1} \quad n_{i,2}] = i^{th} \text{ row of } G$$

where

$n_{i,1}$ is “1” if the satellite is part of reference constellation C1 or “0” if the satellite is part of constellation C2;

$n_{i,2}$ is “0” if the satellite is part of reference constellation C1 or “1” if the satellite is part of constellation C2;

If the ith row of G corresponds to a SBAS ranging measurement:

$n_{i,1}$ is "1" if C1 is GPS or "0" otherwise;

$n_{i,2}$ is "1" if C2 is GPS or "0" otherwise.

If the SBAS providing SBAS ranging measurement is not augmenting GPS, the SBAS clock offset needs to be solved by an additional unknown:

$n_{i,3}$ is "1" if C1 and C2 are different than GPS (additional unknown to solve the clock offset of the SBAS satellite ranging constellation).

The navigation solution vector obtained with the alternative observation matrix is:

$$X = [x, y, z, ct_{C1}, ct_{C2}]$$

where

t_{C1} is the clock bias of the receiver with respect to constellation 1 reference time;

t_{C2} is the clock bias of the receiver with respect to constellation 2 reference time.

6.7.13 *Dual PRNs from one SBAS satellite*

6.7.13.1 *Assignment of SBAS PRN codes to satellites*. For vertically-guided approach operations, the system safety analysis expects user equipment to track two different satellites (as identified by PRN code), if available, to improve continuity of the operation. The broadcast of two PRNs from the same SBAS satellite introduces the SBAS satellite as a common failure between the two SBAS PRNs and might not provide the same level of continuity for these operations.

6.7.13.2 *Multiple SBAS range from the same satellite*. A concern with the broadcast of two ranging PRNs from the same SBAS satellite is that user equipment will use both ranging sources as if they were independent. If there are two ranging PRNs from the same SBAS satellite, the DFMC SBAS mask can prohibit use of both ranging signals in the same position solution for the DFMC SBAS user since the DFMC SBAS user is required to use all information from a single SBAS PRN. Therefore, an SBAS should preclude use of the second SBAS ranging signal from the same satellite by ensuring that the second ranging SBAS PRN satellite slot number is not set to "1" in the satellite mask received from the first SBAS PRN signal and vice-versa.

6.7.14 *Test operations*. Prior to certification for aviation use, SBAS broadcasts a Type 0 Do Not Use message. Aviation equipment will process this Type 0 message by clearing SBAS data received from that SBAS satellite. During pre-operational testing when the SBAS is able to compute valid data, some SBAS providers can broadcast valid data in the Type 0 message. Non-safety of life receivers might decide to use this data to calculate SBAS position solutions. For the L1 messages, some SBAS providers populated the Type 0 message with Type 2 data content. For the L5 message, SBAS providers may populate the Type 0 message with the content of Type 34, Type 35 or Type 36 messages. To identify which of these three integrity messages content is broadcast under Type 0 message, SBAS providers can use bits 222 and 223, with the following convention:

"00"	No integrity data.
"01"	Type 34 data content.
"10"	Type 35 data content.
"11"	Type 36 data content.

SBAS providers may choose a different coding of Type 0 messages in test operation.

6.7.15 *Non-geostationary satellite consideration*. There are several considerations for non-geostationary satellites. With higher satellite eccentricity, the deviations in power and Doppler shift require more consideration from the SBAS provider. Based on analysis, when the eccentricity exceeds 0.15, then the power differential from the orbit will exceed 3 dB and require some onboard power control function. The range change in the orbit will cause a constant power satellite bus to have broadcast power outside of either the maximum or minimum required power at some point during the orbit. When the eccentricity is above 0.3, the satellite Doppler shift at perigee will exceed the maximum specified Doppler shift. Some user equipment might no longer be able to track this satellite at perigee. Generally, highly eccentric orbits are used to increase satellite dwell time over a particular region during the apogee portion of the orbit. Therefore, the inability of user equipment to track the satellite around perigee might not impact the intended SBAS service. The Doppler shift for non-GEO SBAS is set to ± 7 kHz in Appendix B, 3.5.14.1.4, in line with these analyses.

6.7.16 *SNT-to-UTC conversion*

6.7.16.1 Users compute the time referenced in SNT at each epoch by solving the DFMC SBAS navigation solution. The optional Type 42 message provides the parameters to convert the time referenced in SNT into time referenced in UTC.

6.7.16.2 SNT is aligned on the core constellation time identified by the SBAS time reference identifier broadcast in the Type 37 message. The core constellation broadcasts parameters to convert the core constellation time into UTC, without an associated validity period. An SBAS service provider can broadcast a Type 42 message with UTC conversion parameters corresponding to the ones broadcast by the reference core constellation, without guarantee on the validity period by setting the validity period parameter to “000”. SBAS service providers can broadcast a Type 42 message with other validity period values to provide a more accurate UTC conversion service (see Appendix B, 3.5.11.6).

6.7.16.3 Under nominal operation, the UTC conversion parameters broadcast in the Type 42 message are valid during a period of time equal to the validity period parameter. The UTC offset status parameter provides a mechanism to invalidate parameters broadcast in the previous Type 42 message and for which the validity period (VP) has not timed out. In that case, users should discard the UTC conversion parameters from the previous Type 42 message and start using the parameters contained in the latest received Type 42 message, if any provided (i.e. UTC standard identifier not set to 7).

7. GROUND-BASED AUGMENTATION SYSTEM (GBAS) AND GROUND-BASED REGIONAL AUGMENTATION SYSTEM (GRAS)

Note.— In this section, except where specifically annotated, reference to approach with vertical guidance (APV) means APV-I and APV-II.

7.1 System description

7.1.1 GBAS consists of ground and aircraft elements. A GBAS ground subsystem typically includes a single active VDB transmitter and broadcast antenna, referred to as a broadcast station, and multiple reference receivers. A GBAS ground subsystem may include multiple VDB transmitters and antennas that share a single common GBAS identification (GBAS ID) and frequency as well as broadcast identical data. The GBAS ground subsystem can support all the aircraft subsystems within its service volume providing the aircraft with approach data, corrections and integrity information for GNSS satellites in view. GBAS ground and aircraft elements are classified according to the types of service they support (as defined in 7.1.2).

7.1.2 GBAS systems may provide two types of services: approach services and the GBAS positioning service. The approach service provides deviation guidance for FASs within the approach service volume. The GBAS positioning service provides horizontal position information to support RNAV operations within the positioning service volume. The two types of services are also distinguished by different performance requirements associated with the particular operations supported (see Table 3.7.2.4-1) including different integrity requirements as discussed in 7.5.1.

7.1.2.1 GBAS approach services are further differentiated into multiple types referred to as GBAS approach service types (GAST). A GAST is defined as the matched set of airborne and ground performance and functional requirements that are intended to be used in concert in order to provide approach guidance with quantifiable performance. Four types of approach service, GAST A, GAST B, GAST C and GAST D are currently defined. GAST A, B and C are intended to support typical APV I, APV II and Category I operations, respectively. GAST D has been introduced to support landing and guided take-off operations in lower visibility conditions including Category III operations. Note that provisions for a separate service type to support Category II operations, but not Category I nor Category III, have not been made. Since equipment supporting GAST D will function the same when supporting Category II minima as when supporting Category III minima, GAST D provides one means of supporting Category II operations. Category II operations may potentially be supported using GAST C in conjunction with an appropriate aeroplane level integration. A relevant analogy is the authorization in at least one State of lower than Category I minima based on guidance from a facility performance Category I ILS used in conjunction with a head-up display (HUD). Requirements for the approval of Category II operations using GBAS will be defined by the airworthiness and operational approval authorities within States.

7.1.2.1.1 A GBAS ground subsystem may support multiple service types simultaneously. There are two types of ground subsystems, those that support multiple types of approach service and those that do not. Equipment designed in compliance with earlier versions of these SARPs may only support a single type of approach service, GAST C. Equipment designed in compliance with these SARPs may or may not support multiple types of service on one or more runway ends. The type of services supported for each approach are indicated in the approach performance designation field in a FAS data block within the Type 4 message. The GBAS continuity/integrity designator (GCID) parameter in the Type 2 message indicates whether a GBAS ground subsystem is currently supporting multiple types of approach service. Airborne equipment that can support multiple service types will first check the GCID to determine if the ground segment supports multiple types of service. If it does, the equipment will then check the approach performance designator (APD) field of the selected FAS data block within the Type 4 message to determine which types of service are supported by the ground segment for the approach selected (using the channel selection scheme described in 7.7 below). The airborne equipment will then determine which approach service to select based on APD, the current status of GCID and the airborne equipment type. Operators should understand that the available operations may be restricted by many factors including pilot qualifications or temporary ANSP limitations which are not reflected in the APD value. Therefore, APD should not be interpreted as an indication of the availability of any operational use, only as an indication of the service types that are supported for the given runway.

7.1.2.1.2 GBAS airborne equipment may attempt to automatically select the highest type of service supported by both the airborne equipment and the ground segment for the selected approach (as indicated in APD). If the desired type of service is not available, the airborne equipment may select the next lower available type of service and annunciate this appropriately. Therefore, during a GBAS operation, there is the selected service type (SST) and the active service type (AST). The SST is the service type that the airborne equipment would use if it were available, and can be no higher than the highest type of service offered by the ground segment for the selected approach. The AST is the service type that the airborne equipment is actually using at a particular time. The AST may differ from the SST if the SST is unavailable for some reason. The airborne equipment annunciates both the SST and AST so that proper action (e.g. annunciations) may be taken in the context of the airborne integration and operational procedures.

7.1.2.1.3 Service providers should give consideration to what service type or types are actually required for each runway given the planned operations and encode the availability of the appropriate service types in the APD field of the associated FAS block.

7.1.2.1.4 When the ground subsystem is no longer capable of meeting FAST D requirements there are several options, depending upon which requirements are not met. If the ground subsystem cannot meet all of the FAST D integrity requirements (Appendix B, 3.6.7.1.2.1.1.2, 3.6.7.1.2.1.1.3, and 3.6.7.1.2.2.1.1, 3.6.7.3.2) FAST D needs to be removed within the time-to-alert defined in Appendix B, 3.6.7.1.2.1.1.3. If it is still capable of meeting FAST C integrity requirements, the ground subsystem should only remove FAST D and continue to broadcast in FAST C mode. The procedure for removing FAST D includes two options for reflecting this in the corrections (Appendix B, 3.6.7.3.2.1).

7.1.2.1.4.1 When downgrading from FAST D to C, the GCID in the Type 2 message (Appendix B, 3.6.7.2.3.2) also needs to change. A FAST D ground subsystem normally broadcasts a GCID of 2, indicating it supports FAST C and FAST D. When the ground subsystem can no longer support FAST D, but can still support FAST C, the GCID should change to 1. Note that it is assumed here that a FAST D ground subsystem would downgrade to FAST C only, and not to FAST A or B.

7.1.2.1.4.2 Another condition that could result in the ground subsystem no longer being capable of supporting FAST D would be a failure such that FAST D continuity (Appendix B, 3.6.7.1.3.1 and 3.6.7.1.3.2) cannot be met (e.g. failure of redundant components). If FAST D integrity requirements are still met, the ground subsystem is not required to remove the corrections in the Type 11 messages. However, the GCID needs to change to 1. Communicating the change in GCID nominally would take 10 seconds, as the minimum update rate for Type 2 messages is 10 seconds. It may take as long as one minute. A change in FAST should be reflected in the next scheduled broadcast of the Type 2 message. In addition, changes to GCID are ignored by the airborne equipment when the aircraft is in the final stages of the approach. Therefore, GCID changes only affect the FAST for aircraft outside of the final stages of the approach.

7.1.3 A significant distinguishing feature for GBAS ground subsystem configurations is whether additional ephemeris error position bound parameters are broadcast. This feature is required for the positioning service, but is optional for some approach services. If the additional ephemeris error position bound parameters are not broadcast, the ground subsystem is responsible for assuring the integrity of ranging source ephemeris data without reliance on the aircraft calculating and applying the ephemeris bound as discussed in 7.5.9.

7.1.4 *GBAS configurations*. There are multiple configurations possible of GBAS ground subsystems conforming to the GNSS Standards, examples of such configurations are:

a) a configuration that supports GAST C only;

b) a configuration that supports GAST A, GAST B, GAST C, and also broadcasts the additional ephemeris error position bound parameters;

c) a configuration that supports only GAST C and GAST D, and the GBAS positioning service, while also broadcasting the ephemeris error position bound parameters referred to in b); and

d) a configuration that supports only GAST A and the GBAS positioning service, and is used within a GRAS.

7.1.4.1 *GBAS facility classification (GFC)*. A GBAS ground subsystem is classified according to key configuration options. A GFC is composed of the following elements:

a) facility approach service type (FAST);

b) ranging source types;

c) facility coverage; and

d) polarization.

7.1.4.1.1 *Facility approach service type (FAST)*. The FAST is a collection of letters from A to D indicating the service types that are supported by the ground subsystem. For example, FAST C denotes a ground subsystem that meets all the performance and functional requirements necessary to support GAST C. As another example, a FAST ACD designates a ground subsystem that meets the performance and functional requirements necessary to support service types A, C and D.

Note.— The facility classification scheme for GBAS includes an indication of which Service Types the ground subsystem can support. This means the ground subsystem meets all the performance requirements and functional requirements such that a compatible airborne user can apply the information from the ground subsystem and have quantifiable performance at the

output of the processing. It does not necessarily mean that the ground subsystem supports all service types on every runway end. Which GBAS approach service types are supported on a given runway end is indicated in the Type 4 message and is included as part of the approach facility designation defined in 7.1.4.2.

7.1.4.1.2 *Ranging source types*: The ranging source type designation indicates what ranging sources are augmented by the ground subsystem. The coding for this parameter is as follows:

G1 - GPS
G2 - SBAS
G3 - GLONASS
G4 - Reserved for Galileo
G5+ - Reserved for future ranging sources

7.1.4.1.3 *Facility coverage*: The facility coverage designation indicates positioning service capability and maximum use distance. The facility coverage is coded as 0 for ground facilities that do not provide the positioning service. For other cases, the facility coverage indicates the radius of D_{max} expressed in nautical miles.

Note.— The service volume for specific approaches is defined as part of the approach facility designations defined in 7.1.4.2.

7.1.4.1.4 *Polarization*: The polarization designation indicates the polarization of the VHF data broadcast (VDB) signal. E indicates elliptical polarization and H indicates horizontal polarization.

7.1.4.1.5 *GBAS facility classification examples*. The facility classification for a specific facility is specified by a concatenated series of codes for the elements described in 7.1.4.1 through 7.1.4.1.4. The general form of the facility classification is:

GFC = Facility Approach Service Type/Ranging Source Type /Facility Coverage/Polarization.

For example, a facility with the designation of GFC – C/G1/50/H, denotes a ground subsystem that meets all the performance and functional requirements necessary to support service type C on at least one approach, using GPS ranges only, with the GBAS positioning service available to a radius of 50 NM from the GBAS reference position and a VDB that broadcasts in Horizontal polarization only. Similarly, GFC – CD/G1G2G3G4/0/E denotes a ground subsystem that supports at least one approach with a service type of C and D, provides corrections for GPS, SBAS, GLONASS and Galileo satellites, does not support the positioning service and broadcasts on elliptical polarization.

7.1.4.2 *Approach facility designations*. A GBAS ground subsystem may support many approaches to different runway ends at the same airport or even runways at adjacent airports. It is even possible that a GBAS will support multiple approaches to the same runway end with different types of service (intended, for example, to support different operational minima). Each approach provided by the ground system may have unique characteristics and in some sense may appear to the user to be a separate facility. Therefore, in addition to the GBAS facility classification, a system for classifying or designating the unique characteristics of each individual approach path is needed. For this purpose, a system of approach facility designations is defined. Figure D-4 illustrates the relationship between GBAS facility classifications and approach facility designations. The classification is intended to be used for pre-flight planning and published in the AIP.

7.1.4.2.1 *Approach facility designation elements*. Each approach supported by a GBAS can be characterized by an approach facility designation (AFD). The AFD is composed of the following elements:

GBAS identification:	Indicates the GBAS facility identifier that supports the approach (4-character GBAS ID).
Approach identifier:	This is the approach identifier associated with the approach in the message Type 4 data block. It is 4 characters and must be unique for each approach within radio range of the GBAS facility.
Channel number:	This is the channel number associated with the approach selection. It is a 5 digit channel number between 20001 and 39999.
Approach service volume:	Associated with each published approach, indicates the service volume either by a numerical value in feet corresponding to the minimum decision height (DH) or by the GBAS points as defined below (i.e. GBAS Points A, B, C, T, D, E, or S).
Supported service types:	Designates the GBAS service types (A-D) that are supported for the approach by the ground subsystem. This field can never be given a value greater than the facility approach service type for the GBAS ground subsystem that supports the approach.

The GBAS points A, B, C, T, D and E define the same locations relative to the runway as the ILS Points in Attachment C, Figure C-1 used to define the ILS localizer course and glide path bend amplitude limits. Point S is a new point defining the stop end of the runway. For GBAS, the points are used to indicate the location along the nominal approach and/or along the runway for which GBAS performance for the supported service type(s) has been verified. When a decision height is used instead to define the approach service volume, the service volume is provided to a height of half the DH as defined in Chapter 3, 3.7.3.5.3.1. The choice of coding using a DH or GBAS points depends upon the intended operational use of the runway. For example, if the approach identifier corresponds to a Category I instrument approach procedure from which automatic landings are authorized, the approach service volume element is intended to indicate at what point along the runway the performance has been verified. The point definitions are given below:

GBAS Point "A". A point on a GBAS final approach segment measured along the extended runway centre line in the approach direction a distance of 7.5 km (4 NM) from the threshold.

GBAS Point "B". A point on the GBAS final approach segment measured along the extended runway centre line in the approach direction a distance of 1 050 m (3 500 ft) from the threshold.

GBAS Point "C". A point through which the downward extended straight portion of the nominal GBAS final approach segment passes at a height of 30 m (100 ft) above the horizontal plane containing the threshold.

GBAS Point "D". A point 3.7 m (12 ft) above the runway centre line and 900 m (3 000 ft) from the threshold in the direction of the GNSS azimuth reference point (GARP).

GBAS Point "E". A point 3.7 m (12 ft) above the runway centre line and 600 m (2 000 ft) from the stop end of the runway in the direction of the threshold.

GBAS Point "S". A point 3.7 m (12 ft) above the runway centre line at the stop end of the runway.

GBAS reference datum (Point "T"). A point at a height specified by TCH located above the intersection of the runway centre line and the threshold.

7.1.4.2.2 Approach facility designation examples

The approach facility designation consists of the concatenation of the parameters defined in 7.1.4.2.1 as: GBAS ID/approach ID/ranging sources/approach service volume/required service type. An example application of this concept to a particular approach at the US Washington, DC Ronald Reagan International Airport is:

"KDCA/XDCA/21279/150/CD"

where:

KDCA − indicates the approach is supported by the GBAS installation at DCA
XDCA − indicates the approach ident (echoed to the pilot on approach selection) for this specific approach is "XDCA"
21279 − is the 5-digit channel number used to select the approach
150 − indicates the GBAS coverage has been verified to be sufficient to support a DH as low as 150 ft.
CD − indicates that GBAS approach service types C and D are supported by the ground subsystem for the approach

Another example application of this concept to a particular approach at Boeing Field is:

"KBFI/GBFI/35789/S/C"

where:

KBFI − indicates the approach is supported by the GBAS installation at BFI (with GBAS Station identifier KBFI)
GBFI − indicates the approach ident (echoed to the pilot on approach selection) for this specific approach is "GBFI"
35789 − is the 5-digit channel number used to select the approach.
S − indicates the GBAS service volume extends along the approach and the length of the runway surface (i.e. 12 ft above the runway to the stop end).
C − indicates that GBAS approach service type C is supported by the ground subsystem for this FAS.

7.1.4.3 *GBAS airborne equipment classification (GAEC)*

7.1.4.3.1 GBAS airborne equipment may or may not support multiple types of approach service that could be offered by a specific ground subsystem. The GBAS airborne equipment classifications (GAEC) specifies which subsets of potentially available services types the airborne equipment can support. The GAEC includes the following elements:

Airborne approach service type (AAST): The AAST designation is a series of letters in the range from A to D indicating which GASTs are supported by the airborne equipment. For example, AAST C denotes airborne equipment that supports only GAST C. Similarly, AAST ABCD indicates the airborne equipment can support GASTs A, B, C & D.

Note.— For airborne equipment, designating only the highest GBAS approach service type supported is insufficient as not all airborne equipment is required to support all service types. For example, a particular type of airborne equipment may be classified as AAST CD, meaning the airborne equipment supports GAST C and D (but not A or B).

Ranging source types: This field indicates which ranging sources can be used by the airborne equipment. The coding is the same as for the ground facility classification (see 7.1.4.1.2)

7.1.4.3.2 *Multiple service type capable equipment*. Ground and airborne equipment designed and developed in accordance with previous versions of these SARPs (Amendment 80) and RTCA DO-253A will only support GAST C. The current version of the Standards has been designed such that legacy GBAS airborne equipment will still operate correctly when a ground subsystem supports multiple types of service. Also, airborne equipment which can support multiple types of service will operate correctly when operating with a ground subsystem that supports only GAST C.

7.1.4.3.3 *GBAS airborne equipment classification examples*. GBAS airborne equipment classifications consist of a concatenated series of codes for the parameters defined in 7.1.4.3. The general form of the GAEC is:

GAEC = (airborne approach service type)/(ranging source type)

For example:

GAEC of C/G1 – denotes airborne equipment that supports only GAST C and uses only GPS ranges.

Similarly:

GAEC of ABC/G1G4 - denotes airborne equipment that supports all GASTs except GAST D and can use both GPS and Galileo ranging sources.

GAEC of ABC/G1G3 – denotes airborne equipment that supports all GASTs except GAST D and can use both GPS and GLONASS ranging sources.

Finally:

GAEC – CD/G1G2G3G4 – denotes airborne equipment that supports GASTs C and D and uses GPS, SBAS, GLONASS and Galileo ranging sources.

7.1.5 *GRAS configurations*. From a user perspective, a GRAS ground subsystem consists of one or more GBAS ground subsystems (as described in 7.1.1 through 7.1.4), each with a unique GBAS identification, providing the positioning service and one or more approach service types where required. By using multiple GBAS broadcast stations, and by broadcasting the Type 101 message, GRAS is able to support en-route operations via the GBAS positioning service, while also supporting terminal, departure, and operations supported by GAST A or B over a larger coverage region than that typically supported by GBAS. In some GRAS applications, the corrections broadcast in the Type 101 message may be computed using data obtained from a network of reference receivers distributed in the coverage region.

7.1.6 *VDB transmission path diversity*. All broadcast stations of a GBAS ground subsystem broadcast identical data with the same GBAS identification on a common frequency. The airborne receiver need not and cannot distinguish between messages received from different broadcast stations of the same GBAS ground subsystem. When within coverage of two such broadcast stations, the receiver will receive and process duplicate copies of messages in different time division multiple access (TDMA) time slots.

7.1.7 Interoperability of the GBAS ground and aircraft elements compatible with RTCA/DO-253() is addressed in Appendix B, 3.6.8.1. GBAS receivers compliant with RTCA/DO-253A will not be compatible with GRAS ground subsystems broadcasting Type 101 messages. However, GRAS and GBAS receivers compliant with RTCA/DO-310 GRAS MOPS, will be compatible with GBAS ground subsystems. SARPs-compliant GBAS receivers may not be able to decode the FAS data correctly for GAST A transmitted from GBAS ground subsystems (i.e. a FAS data block with APD coded as “0”). These receivers will apply the FASLAL and FASVAL as if the active service type is GAST C. ANSPs should be cognizant of this fact and relevant operational restrictions may have to be applied to ensure the safety of the operation. For GBAS ground subsystems providing GAST D, APD in the FAS data blocks may be coded as values of 1 or 2 (Appendix B, 3.6.4.5.1). SARPs compliant GBAS receivers developed in accordance with SARPs prior to Amendment 91 may not be able to use FAS data blocks with APD equal to 2 or above.

7.1.8 The GBAS VDB transmits with either horizontal or elliptical polarization (GBAS/H or GBAS/E). This allows service providers to tailor the broadcast to their operational requirements and user community.

7.1.9 The majority of aircraft will be equipped with a horizontally-polarized VDB receiving antenna, which can be used to receive the VDB from both GBAS/H and GBAS/E equipment. A subset of aircraft will be equipped with a vertically-polarized antenna due to installation limitations or economic considerations. These aircraft are not compatible with GBAS/H equipment and are, therefore, limited to GBAS-based operations supported by GBAS/E.

7.1.10 GBAS service providers must publish the signal polarization (GBAS/H or GBAS/E), for each GBAS facility in the aeronautical information publication (AIP). Aircraft operators that use vertically polarized receiving antenna will have to take this information into account when managing flight operations, including flight planning and contingency procedures.

7.1.11 *Availability considerations for GBAS*. A single GBAS ground subsystem may provide multiple types of service to multiple users and service for multiple runway ends simultaneously. These different types of service may have different availability and consequently one type of service may be available when another is not. Furthermore, as some elements of GBAS are optional (e.g. augmentation of multiple constellations or use of SBAS ranging sources), the capabilities of different users will vary. For this reason, it is not practical for the service provider to predict if a given user will find a specific service type to be available at any given time. All that can be known by the service provider is the status of the ground subsystem and satellite constellation. An assessment can be made as to whether the ground subsystem is meeting the allocated requirements for some target service type and further, the availability of service can be predicted based on an assumed level of performance and a nominal user. The definition of the nominal user includes which elements of GNSS are used (core satellite systems, SBAS ranges etc.) and within that, which subset of satellites are used in the position solution. For GBAS supporting GAST D this is further complicated by the fact that certain parameters (e.g. geometry screening thresholds) may be adjusted by the airframe designer to ensure adequate landing performance given the characteristics of the specific aircraft type. ANSPs and air space designers should be cognizant of the fact that availability of service for GNSS augmentation systems in general is less predictable than conventional navigation aids. Variations in user capabilities will result in times where service may be available to some users and unavailable to others.

7.2 RF characteristics

7.2.1 Frequency coordination

7.2.1.1 *Performance factors*

Note.— Guidance material on VOR and GBAS performance factors that must be considered when determining the geographical separation for the purpose of frequency coordination between a candidate GBAS station, a candidate VOR station and existing VOR or GBAS installations is given in the Handbook on Radio Frequency Spectrum Requirements for Civil Aviation *(Doc 9718, Volume II), Chapters 4 (VOR) and 6 (GBAS).*

7.2.1.1.1 Nominal link budgets for VDB are shown in Table D-6. The first example in Table D-6 assumes a user receiver height of 3 000 m (10 000 ft) MSL and a transmit antenna designed to suppress ground illumination in order to limit the fading losses to a maximum of 10 dB at VDB coverage edge. In the case of GBAS/E equipment, the 10 dB also includes any effects of signal loss due to interference between the horizontal and vertical components. The second example in Table D-6 provides a link budget for longer range positioning service. It is for a user receiver height sufficient to maintain radio line-of-sight with a multi-path limiting transmitting antenna. No margin is given in Table D-6 for fading as it is assumed that the receiver is at low elevation angles of radiation and generally free from significant null for the distances shown in the table (greater than 50 NM). In practice, installations will experience a fade margin that will be dependent on many parameters including aircraft altitude, distance from transmit antenna, antenna type/design and ground reflectors.

7.2.1.2 *FM immunity*

Note.— Guidance material on GBAS FM immunity is given in the Handbook on Radio Frequency Spectrum Requirements for Civil Aviation *(Doc 9718, Volume II), Chapter 6.*

7.2.1.3 *Geographic separation methodologies*

Note.— Guidance material on GBAS geographic separation methodologies is given in the Handbook on Radio Frequency Spectrum Requirements for Civil Aviation *(Doc 9718, Volume II), Chapter 6.*

Table D-6. Nominal VDB link budget

VDB link elements					
For approach service		*Vertical component at coverage edge*		*Horizontal component at coverage edge*	
Required receiver sensitivity (dBm)		–87		–87	
Maximum aircraft implementation loss (dB)		11		15	
Power level after aircraft antenna (dBm)		–76		–72	
Operating margin (dB)		3		3	
Fade margin (dB)		10		10	
Free space path loss (dB) at 43 km (23 NM)		106		106	
Nominal effective isotropically radiated power (EIRP) (dBm)		43		47	
For longer range and low radiation angle associated with positioning service		*Vertical component*		*Horizontal component*	
Required receiver sensitivity (dBm)		–87		–87	
Maximum aircraft implementation loss (dB)		11		15	
Power level after aircraft antenna (dBm)		–76		–72	
Operating margin (dB)		3		3	
Fade margin (dB)		0		0	
Nominal EIRP (dBm)					
Range (km (NM))	Free space loss (dB)	EIRP (dBm)	EIRP (W)	EIRP (dBm)	EIRP (W)
93 (50)	113	39.9	10	43.9	25
185 (100)	119	45.9	39	49.9	98
278 (150)	122	49.4	87	53.4	219
390 (200)	125	51.9	155	55.9	389

Notes.—

1 It is possible, with an appropriately sited multipath limiting VDB transmitting antenna with an effective radiated power sufficient to meet the field strength requirements for approach service and considering local topographical limitations, to also satisfy the field strength requirements such that positioning service can be supported at the ranges in this table.

2. Actual aircraft implementation loss (including antenna gain, mismatch loss, cable loss, etc.) and actual receiver sensitivity may be balanced to achieve the expected link budget. For example, if the aircraft implementation loss for the horizontal component is 19 dB, the receiver sensitivity must exceed the minimum requirement and achieve -91 dBm to satisfy the nominal link budget.

3. The long-range performance estimates may generally be optimistic with the assumption of no fade margin, i.e., link budget performance will generally not be as good as these estimates indicate.

7.2.2 The geographical separation criteria for GBAS/ILS and GBAS/VHF communications are given in the *Handbook on Radio Frequency Spectrum Requirements for Civil Aviation* (Doc 9718, Volume II), Chapters 2 and 6.

7.2.3 *Compatibility with ILS*

7.2.3.1 *Inter-airport compatibility*. The minimum geographical separation based on a minimum frequency separation of 75 kHz between ILS localizer and GBAS ground station deployed at different airports is 3 NM between the undesired transmitter antenna location and the edges of the coverage of the desired service that are assumed to be at minimum signal power. Smaller necessary separation distance values may be obtained by taking into account additional information such as the actual desired service field strength and actual undesired service transmit antenna radiation patterns.

Note.— The coverage of the ILS localizer is standardized in Chapter 3, 3.1.3.3 and the GBAS service volume is standardized in Chapter 3, 3.7.3.5.3, respectively.

7.2.3.2 *Same-airport compatibility* When applying international frequency assignment planning rules, incompatibility with existing ILS or VOR at or near the same airport may lead to an unsuccessful frequency assignment for a given GBAS VDB. In such a case applying 'same-airport compatibility' assessment may still lead to a compatible GBAS VDB frequency. Guidance on same-airport compatibility assessment is contained in Appendix H of EUROCAE ED114B change 1.

7.2.3.3 At those locations where an ILS facility and a GBAS facility serve opposite approach directions to the same runway, there is a possibility of interference to the GBAS VDB signals in the region where the aircraft overflies the localizer. The interference can result in exceedance of the message failure rate requirement (Appendix B, 3.6.8.2.2.3) and cause a loss of continuity of GBAS guidance. The condition of unacceptable interference is when the ILS localizer signal does not support compliance with the requirements in Appendix B, 3.6.8.2.2.5 and 3.6.8.2.2.6, defining the desired to undesired signal ratios and the maximum adjacent channel power tolerable by the GBAS VDB receiver. The interference is likely to be higher when the localizer is sited close to the runway threshold. Chapter 3, 3.1.2.8 specifies the conditions under which radiation by localizers not in operational use should not be allowed. Compliance with 3.1.2.8 will ensure there is no interference by the ILS localizer to GBAS during low visibility operations that require GAST D. Generally, this should not be an issue for GAST C operations due to the 3.5 seconds window allowed to receive three Type 1 messages, when the aircraft overflies the localizer. However, there may be conditions during GAST C operations where the VDB signal power does not support the D/U, or the maximum ILS localizer power is incompatible with recovery from short term excess undesired signal power (Appendix B, 3.6.8.2.2.6.5), and that would require the localizer to be turned off.

7.2.4 *Compatibility with VHF communications*

Note.— Guidance material on GBAS compatibility with VHF communications is given in the Handbook on Radio Frequency Spectrum Requirements for Civil Aviation *(Doc 9718, Volume II), Chapters 2 and 6.*

7.2.5 For a GBAS ground subsystem that only transmits a horizontally-polarized signal, the requirement to achieve the power associated with the minimum sensitivity is directly satisfied through the field strength requirement. For a GBAS ground subsystem that transmits an elliptically-polarized component, the ideal phase offset between HPOL and VPOL components is 90 degrees. In order to ensure that an appropriate received power is maintained throughout the GBAS service volume during normal aircraft manoeuvres, transmitting equipment should be designed to radiate HPOL and VPOL signal components with an RF phase offset of 90 degrees. This phase offset should be consistent over time and environmental conditions. Deviations from the nominal 90 degrees must be accounted for in the system design and link budget, so that any fading due to polarization loss does not jeopardize the minimum receiver sensitivity. System qualification and flight inspection procedures will take into account an allowable variation in phase offset consistent with maintaining the appropriate signal level throughout the GBAS service volume. One method of ensuring both horizontal and vertical field strength is to use a single VDB antenna that transmits an elliptically-polarized signal, and flight inspect the effective field strength of the vertical and horizontal signals in the service volume.

7.3 Service volume

7.3.1 The minimum GBAS service volume to support approach services is depicted in Figure D-5. Where practical, it is operationally advantageous to provide valid guidance along the visual segment of an approach. The lateral approach service volume may be different (larger) than the vertical approach service volume. When the additional ephemeris error position bound parameters are broadcast, differential corrections may only be used within the Maximum Use Distance (D_{max}) defined in the Type 2 message. It is also allowable for D_{max} to extend beyond an approach service volume. Reasons why this may be desirable include providing pilots with situational awareness and GBAS status information prior to intercepting the approach procedure, and improving GBAS course capture at the limits of the service volume. In such cases, the potential for reduced protection level, ephemeris bound, and VDB continuity outside the approach service volume should be considered especially when broadcasting large or unlimited values of D_{max}.

7.3.1.1 If a GBAS installation supports multiple approach service volumes, use of a single omnidirectional data broadcast covering all intended service volumes should be considered to limit complexity, if geographically feasible.

7.3.1.2 In addition, autoland or guided take-off may be used at facilities or runways not intended to support or not currently supporting Category II or III operations using GBAS. Even in Category I or better visual conditions, use of an approved autoland system with GAST C can aid pilots in achieving stabilized approaches and reliable touchdown performance, for Category II or III training, to exercise the airborne system to ensure suitable performance, and for maintenance checks. Use of this capability may also provide pilot workload relief. Similarly, use of an approved guided take-off system will also provide operational benefits. Autoland and guided take-off service volume requirements are contained in Chapter 3, 3.7.3.5.3.2. VDB reception on the runway surface is significantly affected by the transmit antenna design and its installed height as well as the geography of the airport. Service along all runways at an airport using a single VDB antenna/transmitter location may be difficult. However, where practical, service to support autoland and guided take-off operations should be provided at suitable runways supporting any precision approach. The approach service volume element of the approach facility designation allows this information to be contained in the AIP (refer to 7.1.4.2.1). A useful autoland capability may be achievable for some aircraft even when the requirements of Chapter 3, 3.7.3.5.3.2 are not entirely met. Similarly, some aircraft may not be able to conduct automatic landings with only the minimum service volume provided. For approaches with a FAS data path not aligned with the runway centre line, autoland service volume is not required.

7.3.2 An increased signal power (-62.5 dBm) from 36 ft and above, compared to the minimum requirement set for the GBAS service volume at 12 ft above the ground (-72 dBm), is required above the runway surface to accommodate various implementations of airborne VDB antenna. Indeed, VDB antenna height and aircraft implementation loss might not be suitable to meet adequate continuity for autoland under Category III conditions and guided take-off if:

a) aircraft VDB antenna height located above 12 ft may induce more than the expected 15 dB aircraft implementation loss; and

b) aircraft VDB antenna height located below 12 ft may receive a signal power that is below the minimum required value of -72 dBm.

7.3.2.1 To mitigate a lack of adequate VDB link budget, actual aircraft implementation loss (including type of antenna and location of antenna on the fuselage, antenna gain, mismatch loss, cable loss, etc.) and actual receiver sensitivity may be balanced to achieve the expected link budget. The need for additional operational mitigations might be identified and implemented during the aircraft approval process in case of potential loss of VDB along the flight path. It is common practice that a verification flight test is performed by a candidate operator to perform autoland under Category III conditions on a given runway.

7.3.2.2 It is not practical to measure the signal strength at 36 ft. Therefore, two example means of verification are identified below:

- Simplified analysis method: Measure the signal at 12 ft and estimate the signal strength at 36 ft using mathematical tools;

- Complex analysis method: Model the airport configuration and simulate, using a mathematical tool, the signal strength at 12 ft and 36 ft.

Note 1.— There exists an upper limit in the autoland service volume above the runway surface set at 100 ft.

Note 2.— Verification of minimum signal strength at 36 ft is sufficient to ensure compliance above 36 ft.

7.3.2.3 Simplified analysis method.

In order to apply this method, it is assumed the following:

- o VDB transmitter antennas are installed above a planar ground with line-of-sight to runways in the desired GBAS service volume as mentioned in 7.12.3.

- The analysis methodology consists of:

  - o Ground subsystem manufacturers and/or service providers perform a generic (non-airport specific) analysis to show that signal strength requirements at both 12 ft and 36 ft can be met based on distance from and height of the VDB antenna at their specific location. Studies have shown that signal strength will increase from the signal strength measured at 12 ft in various airport configurations. When verifying compliance for a specific installation, an acceptable means of compliance is to measure the signal strength at 12 ft and estimate the signal strength by using the following formula:

To estimate the power P_{hdBm} (in dBm) at a height h (in metres) from the power $P_{h_0 dBm}$ at a height h_0 (in metres), one can use the following expression:

$$\mathrm{P}_{h\mathrm{dBm}} = P_{h_0\mathrm{dBm}} + 20\log\left(\sin\left(\frac{2\pi h h_a}{\lambda d}\right)\right) - 20\log\left(\sin\left(\frac{2\pi h_0 h_a}{\lambda d}\right)\right)$$

where

- d is the horizontal distance to the transmitter antenna in metres
- h_a is the height of the transmitter antenna phase centre in metres
- $\lambda = c / f$ is the wavelength in metres
- f is the frequency in Hertz
- c is the speed of light

For $h < \frac{\lambda d}{8 h_a}$, the previous formulation can be approximated with an error smaller than 1dB as follows:

$$\mathrm{P}_{h\mathrm{dBm}} = P_{h_0\mathrm{dBm}} + 20\log\left(\frac{h}{h_0}\right)$$

Alternatively, converting heights in feet and considering $h_0^{\mathrm{ft}} = 12$ ft, the previous expressions become:

$$\mathrm{P}_{h\mathrm{dBm}} = P_{h_0\mathrm{dBm}} + 20\log\left(\sin\left(\frac{0.584 h^{\mathrm{ft}} h_a^{\mathrm{ft}}}{\lambda d}\right)\right) - 20\log\left(\sin\left(\frac{7 h_a^{\mathrm{ft}}}{\lambda d}\right)\right)$$

and

$$\mathrm{P}_{h\mathrm{dBm}} = P_{h_0\mathrm{dBm}} + 20\log\left(h^{\mathrm{ft}}\right) - 21.58\mathrm{dB}$$

The applicability of the above-mentioned formula at different heights above the runway surface may vary with the distance between the VDB transmitter antenna and the intended path on the runway surface, and the VDB transmitter antenna height. Some siting constraints may be needed to verify the minimum signal strength is met in the service volume above the runway surface.

7.3.2.4 Complex analysis method.

This method assumes that:

- Airport configuration is so complex that "noise like multipath" (multipath reflections from buildings or aircraft standing or moving) cannot be easily accounted for and must be addressed in the analysis;

and/or

- Line-of-sight between the VDB antenna and runway cannot be maintained.

The analysis methodology consists of:

- The airport configuration includes relevant surfaces such as buildings and metallic fences, and topology of the ground surface is modeled with their electromagnetic characteristics. Radiation pattern of the VDB transmitter antenna is also modeled.

- Signal powers at 12 ft and 36 ft are estimated by simulating radio propagation. One of the acceptable means of the simulation is the ray-tracing method based on geometric optics. Such simulation is available with commercially available software with an intuitive human-machine interface to the airport modeling.

- Effects of small-scale (less than 5-10 wavelengths) structures limit the accuracy of simulation by the ray-tracing method. Therefore, an additional margin to represent such effects may need to be added to the simulation results.

- The signal power at 12 ft is measured and compared with the simulated one. If the measured and simulated signal powers at 12 ft match well, the simulation can be regarded as being able to model the signal powers at different heights over the runway.

- The simulated signal power and the minimum requirement at 36 ft are compared to verify the compliance of the VDB coverage over the runway.

7.3.3 The service volume required to support the GBAS positioning service is dependent upon the specific operations intended. The optimal service volume for this service is intended to be omnidirectional in order to support operations using the GBAS positioning service that are performed outside of the approach service volume. Each State is responsible for defining a service volume for the GBAS positioning service and ensuring that the requirements of Chapter 3, 3.7.2.4 are satisfied. When making this determination, the characteristics of the fault-free GNSS receiver should be considered, including the reversion to ABAS-based integrity in the event of loss of GBAS positioning service.

7.3.4 The limit on the use of the GBAS positioning service information is given by the Maximum Use Distance (D_{max}). D_{max} however does not delineate the coverage area where field strength requirements specified in Chapter 3, 3.7.3.5.4.4 are necessarily met nor matches this area. Accordingly, operations based on the GBAS positioning service can be predicated only in the service volume(s) (where performance requirements are met) within the D_{max} range.

7.3.5 As the desired service volume of a GBAS positioning service may be greater than that which can be provided by a single GBAS broadcast station, a network of GBAS broadcast stations can be used to provide the service. These stations can broadcast on a single frequency and use different time slots (8 available) in neighbouring stations to avoid interference or they

can broadcast on different frequencies. Figure D-5A details how the use of different time slots will allow a single frequency to be used without interference subject to guard time considerations noted under Table B-57. For a network based on different VHF frequencies, guidance material in 7.17 should be considered.

7.4 Data structure

A bit scrambler/descrambler is shown in Figure D-6.

Note.— Additional information on the data structure of the VHF data broadcast is given in RTCA/DO-246E, GNSS Based Precision Approach Local Area Augmentation System (LAAS) — Signal-in-Space Interface Control Document (ICD).

7.5 Integrity

7.5.1 Different levels of integrity are specified for precision approach operations and operations based on the GBAS positioning service. The signal-in-space integrity risk for approach services is 2×10^{-7} per approach. GBAS ground subsystems that are also intended to support other operations through the use of the GBAS positioning service have to also meet the signal-in-space integrity risk requirement specified for terminal area operations, which is 1×10^{-7}/hour (Chapter 3, Table 3.7.2.4-1). Therefore additional measures are necessary to support these more stringent requirements for positioning service. The signal-in-space integrity risk is allocated between the ground subsystem integrity risk and the protection level integrity risk. The ground subsystem integrity risk allocation covers failures in the ground subsystem as well as core constellation and SBAS failures such as signal quality failures and ephemeris failures. For GAST A, B, and C the protection level integrity risk allocation covers rare fault-free position domain performance risks and the case of failures in one of the reference receiver measurements. In both cases the protection level equations ensure that the effects of the satellite geometry used by an aircraft fault-free receiver are taken into account. This is described in more detail in the following paragraphs. For GAST D, the position domain integrity is delegated to the aircraft and a FAST D ground subsystem provides additional data and ranging source monitoring for aircraft using this service type.

7.5.1.1 Additional integrity requirements apply for GAST D, which is intended to support precision approach and automatic landing in low visibility conditions with minima less than Category I. The same requirements for bounding the position solution within a protection level that is compared to an alert limit apply, for all error sources except single ground reference receiver faults and errors induced by ionospheric anomalies. Single ground reference receiver faults are mitigated as described in 7.5.11. The responsibility for some errors induced by anomalous ionospheric conditions has been allocated to the airborne equipment. Mitigation of errors due to ionospheric anomalies is described in 7.5.6.1.6. Additional monitoring requirements and design assurance requirements are needed to allow a FAST D GBAS ground subsystem to provide a service that can provide equivalent safety to Category III ILS operations. Some additional monitoring requirements are allocated to the ground subsystem (see 7.5.6.1 to 7.5.6.1.7) and some are allocated to the airborne equipment. The additional monitoring performance requirements for the ground subsystem can be found in Appendix B, 3.6.7.3.3.

7.5.1.2 The ground subsystem integrity risk requirement for GAST D (Appendix B, 3.6.7.1.2.1.1.3) limits the probability of a ground subsystem failure resulting in the transmission of erroneous data during a minimum exposure time of “any one landing.” Typically the critical period of exposure to failures for vertical guidance in Category III operations is taken to be the period between the Category I Decision Height (200 ft) and the threshold (50 ft height). This is nominally 15 seconds, depending upon the aircraft approach speed. The critical period of exposure to failures for lateral guidance in Category III operations is taken to be the period between the Category I Decision Height and completion of the roll-out, which occurs when the aircraft decelerates to a safe taxi speed (typically less than 30 knots). This is nominally 30 seconds, again depending upon the aircraft approach speed and rate of deceleration. The term “any one landing” is used to emphasize that the time period where faults could occur extends prior to the critical period of exposure. The reason for this is that the fault may develop slowly over time; it could occur earlier in the landing phase and become a hazard during the critical period of exposure.

7.5.1.3 The critical period of exposure to failure for lateral guidance during a guided take-off in low visibility conditions is nominally 60 seconds. Erroneous or loss of guidance during a guided take-off being less critical than for Category III landings, it does not introduce any changes to the ground subsystem integrity requirements.

7.5.2 The GBAS ground subsystem defines a corrected pseudo-range error uncertainty for the error relative to the GBAS reference point (σ_{pr_gnd}) and the errors resulting from vertical (σ_{tropo}) and horizontal (σ_{iono}) spatial decorrelation. These uncertainties are modelled by the variances of zero-mean, normal distributions which describe these errors for each ranging source.

7.5.3 The individual error uncertainties described above are used by the receiver to compute an error model of the navigation solution. This is done by projecting the pseudo-range error models to the position domain. General methods for determining that the model variance is adequate to guarantee the protection level integrity risk are described in section 14. The lateral protection level (LPL) provides a bound on the lateral position error with a probability derived from the integrity requirement. Similarly, the vertical protection level (VPL) provides a bound on the vertical position. For approach services, if the computed LPL exceeds the lateral alert limit (LAL) or the VPL exceeds the vertical alert limit (VAL), integrity is not adequate to support the selected service type . For the positioning service the alert limits are not defined in the standards, with only the horizontal protection level and ephemeris error position bounds required to be computed and applied. The alert limits will be determined based on the operation being conducted. The aircraft will apply the computed protection level and ephemeris bounds by verifying they are smaller than the alert limits. Two protection levels are defined, one to address the condition when all reference receivers are fault-free (H_0 – Normal Measurement Conditions), and one to address the condition when one of the reference receivers contains failed measurements (H_1 – Faulted Measurement Conditions). Additionally an ephemeris error position bound provides a bound on the position error due to failures in ranging source ephemeris. For approach services, a lateral ephemeris error bound (LEB) and a vertical ephemeris error bound (VEB) are defined. For the positioning service a horizontal ephemeris error bound (HEB) is defined.

7.5.3.1 The GBAS signal-in-space integrity risk (Appendix B, 3.6.7.1.2.1.1) is defined as the probability that the ground subsystem provides information which when processed by a fault-free receiver, using any combination of GBAS data allowed by the protocols for data application (Appendix B, 3.6.5), results in an out-of-tolerance lateral or vertical relative position error without annunciation for a period longer than the maximum time-to-alert. An out-of-tolerance lateral or vertical relative position error is defined as an error that exceeds the GBAS approach services protection level and, if additional data block 1 is broadcast, the ephemeris error position bound. Hence it is the responsibility of the ground subsystem to provide a consistent set of data including the differential corrections, and all parameters that are used by the protocols for data application (e.g, σ_{pr_gnd} and the B values as defined in the Type 1 message), so that the protection levels bound the position error with the required integrity risk. This error bounding process must be valid for any set of satellites that the user might be using. To ensure the computed protection levels actually bound the error with the required probability, it may in some cases be necessary to inflate or otherwise manipulate one or more of the parameters that are used by the protocols for data application. For example, to address the impact of anomalous ionospheric effects one strategy that has been used is to inflate σ_{pr_gnd} and $\sigma_{vert\_iono\_gradient}$ to ensure that airborne equipment that complies with the protocols for data application will be adequately protected.

7.5.4 *Ground system contribution to corrected pseudo-range error (σ_{pr_gnd})*. Error sources that contribute to this error include receiver noise, multipath, and errors in the calibration of the antenna phase centre. Receiver noise has a zero-mean, normally distributed error, while the multipath and antenna phase centre calibration can result in a small mean error.

7.5.5 *Residual tropospheric errors*. Tropospheric parameters are broadcast in Type 2 messages to model the effects of the troposphere, when the aircraft is at a different height than the GBAS reference point. This error can be well-characterized by a zero-mean, normal distribution.

7.5.5.1 *Tropospheric parameters.* Because tropospheric refraction is a local phenomenon, the tropospheric parameters will be determined by the GBAS provider based on local meteorological data or empirical models. Tropospheric delay is proportional to the refractivity integrated over a height interval from the GBAS ground subsystem to the airborne subsystem. The tropospheric delay consists of the dry and wet (water vapor) air components.

7.5.5.2 *Tropospheric scale height.* Tropospheric scale height accounts for the dependence of the tropospheric correction and residual tropospheric uncertainty on the height difference between the GBAS ground and airborne subsystems. The height variations of the refractivity of the dry and wet components are different. Because only one scale height can be broadcast in message Type 2, the broadcast scale height should account for the height variation of the total tropospheric refractivity including dry and wet components. One of the acceptable means of modeling the scale height is described below.

7.5.5.2.1 *Total scale height.* Using $h0$ to estimate TC and $\sigma tropo$ as described in Appendix B, 3.6.5.3.1 and 3.6.5.3.2 is equivalent to approximating the height profile of the tropospheric refractivity by a function decaying exponentially from the refractivity at the ground surface level (hS). The total refractivity (Nr) is the sum of the dry refractivity ($Ndry$) and wet refractivity ($Nwet$). The dry and wet components have different scale heights ($h0,dry$, $h0,wet$). As long as the height difference is much smaller than the scale heights, the total scale height can be described as follows:

$$h_0 = \frac{N_r(h_S)h_{0,dry}h_{0,wet}}{N_{dry}(h_S)h_{0,wet}+N_{wet}(h_S)h_{0,dry}}$$

7.5.5.2.2 *Dry and wet scale heights.* The height variations of the dry and wet components of the refractivity can be found in literature. According to one of the models (Hopfield, 1971), as long as the height difference is much smaller than the scale heights, the dry and wet scale heights can be described as follows:

$$h_{0,dry} = \frac{h_d - h_S}{\mu}$$
$$h_{0,wet} = \frac{h_w - h_S}{\mu}$$
$$\mu = [g/(R\alpha)] - 1$$

where g is the gravitational acceleration, α the temperature lapse rate by height, and R the gas constant for unit mass of air. hd and hw are respectively the empirically determined equivalent heights where the modelled dry and wet refractivities become zero. For μ=4 corresponding to α=6.7 K/km, Hopfield (1971) obtained the following set of equations to best fit radiosonde measurements:

$$h_{0,dry} = \frac{h_d - h_S}{4}$$
$$h_{0,wet} = \frac{h_w - h_S}{4}$$
$$h_d = 40\,082 + 148.98 \cdot (T - 273.15)\ \ [m]$$
$$h_w = 13\,268 - 97.96 \cdot (T - 273.15)\ \ [m].$$

As these expressions were obtained to best fit the observations, estimated TC would be valid even for the standard atmosphere (α=6.5 K/km). For α values other than 6.7 K/km (i.e. μ other than 4), h_d and h_w must be determined for the specific α value. The tropospheric scale height is different for locations and seasons due to variations of the temperature, temperature lapse rate, dry and wet mixing ratio, and so on. The scale height should be determined to account for the statistics of local meteorological conditions. The error in TC associated with the scale height and the other tropospheric parameters must be bounded by a Gaussian distribution with zero mean and a standard deviation of σ_{tropo}.

7.5.5.3 *Determination of tropospheric parameters.* One of the acceptable means to determine the tropospheric parameters is to use a dataset observed at a meteorological station near the GBAS reference point. The dataset should consist of at least the surface pressure, temperature and relative humidity. The meteorological station should be located within the same climatological conditions as the GBAS reference point. It is necessary to correct effects of a difference in altitude on the tropospheric parameters. If certain local and characteristic meteorological phenomena such as the sea breeze are known, they may also need to be considered in selecting the meteorological station. The period of the dataset should at least be over one year to account for the seasonal variation of the meteorological phenomena. Year-to-year and longer-term variations of the tropospheric parameters should be considered. Refractivity index (Nr) is the sum of dry refractivity ($Ndry$) and wet refractivity ($Nwet$) as described in 7.5.5.2.1. $Ndry$ can be obtained from averaged values for surface pressure and temperature during the period. $Nwet$ can be calculated from the surface temperature and partial pressure of the water vapor which can be derived from the surface temperature and relative humidity. The refractivity uncertainty (σn) can be calculated by taking the standard deviation of the Nr to overbound the dataset. This overbounding will account for the year-to-year and longer-term variations.

As long as it is determined to overbound the observed dataset, periodic recomputation of the tropospheric parameters is not necessary. The scale height (h0) can be derived from the averaged surface temperature, Nr, $Ndry$ and $Nwet$ according to the equations in 7.5.5.2.1 and 7.5.5.2.2.

7.5.5.4 *Other considerations related to the troposphere.* The horizontal variation in the tropospheric delay is not considered in the tropospheric correction. However, the tropospheric delay is not necessarily horizontally homogeneous. If a service provider determines that the horizontal gradient is not negligible, the horizontal variation in the tropospheric delay should be accounted for. One of the acceptable means is to include the uncertainty in the tropospheric delay associated with its horizontal variation in $\sigma_{vert\_iono\_gradient}$ because it is a parameter which can account for errors proportional to the distance between the GBAS reference point and the aircraft.

7.5.6 *Residual ionospheric errors*. An ionospheric parameter is broadcast in Type 2 messages to model the effects of the ionosphere between the GBAS reference point and the aircraft. This error can be well-characterized by a zero-mean, normal distribution during nominal conditions.

7.5.6.1 *Ionospheric anomalies*. Small scale structures in the ionosphere can result in non-differentially corrected errors in the GBAS position. Such phenomena are typically associated with solar storm activity and may be characterized by steep gradients in the ionospheric delay over a relatively short distance (e.g. a few tens of kilometres). The errors that may be induced by these phenomena result when the airborne receiver and ground subsystem are receiving satellite signals that have different propagation delays. Also, since GBAS uses code-carrier smoothing with a relatively long time constant, biases build up in these filters that are a function of the rate of change of ionospheric delay. If the ground subsystem and airborne receivers experience significantly different delays and rates of change of the ionospheric delays, the biases that build up in these filters will not match and will not be cancelled by the differential processing.

7.5.6.1.1 *Ionospheric anomaly mitigation*. Ionospheric anomalies can produce position errors which are significant (i.e. tens of metres) in the context of approach operations. To mitigate these errors, different strategies are used depending on the GBAS approach service type.

7.5.6.1.2 *Ionospheric anomaly mitigation for GAST A, B and C*. For GAST A, B or C, the ground subsystem is responsible for mitigating the potential impact of ionospheric anomalies. This may be handled through various monitoring schemes (e.g. far-field monitors or integration with a wide area ground network supporting SBAS) which detect the presence of ionosphere anomalies and deny service if the resulting user position errors would be unacceptable. One means to deny service is to inflate some combination of the broadcast integrity parameters: σ_{pr_gnd}, $\sigma_{vert\_iono\_gradient}$, the ephemeris decorrelation parameter (P), the ephemeris missed detection parameters $K_{md\_e,GPS}$ and $K_{md\_e\_,GLONASS}$ such that any geometry that could be used by an airborne user will not be subjected to intolerably large errors (given the intended operational use). This inflation scheme could also be used without the complexity of monitoring the ionosphere during operations by assuming ionosphere anomalies are present. In this case, a model of the possible ionosphere conditions that could occur is used to determine the proper values of the broadcast integrity parameters. Since the extremes of ionosphere conditions vary significantly through the world, the model is location dependent. Such an inflation scheme results in a reduction in availability because it inflates the values even when anomalies are not present.

7.5.6.1.3 *Ionospheric anomaly mitigation for GAST D*. Requirements for monitoring and geometry screening in the airborne equipment have been introduced for GAST D to mitigate the potential impact of ionospheric anomalies. The airborne monitoring consists of monitoring the code-carrier divergence continuously in order to detect large gradients in the ionosphere. In addition, the airborne equipment will screen geometries to ensure that an unacceptably large amplification of residual pseudo-range errors (i.e. errors that may exist after airborne monitoring has been applied) will not occur. Another factor which is useful for the mitigation of errors induced by ionospheric anomalies is the use of the 30-second carrier smoothed pseudo-ranges in a position solution. (The shorter time constant smoothing is inherently less susceptible to filter bias mismatch errors.) Finally, GAST D includes parameters: $K_{md\_e\_D,GLONASS}$, $K_{md\_e\_D,GPS}$, P_D and $\sigma_{vert\_iono\_gradient\_D}$, which are intended to be used in place of the parameters $K_{md\_e,GLONASS}$, $K_{md\_e,GPS}$, P, and $\sigma_{vert\_iono\_gradient}$, respectively, when the active service type is GAST D. This is done so that if the ground subsystem employs inflation of the parameters $K_{md\_e\_,GLONASS}$, $K_{md\_e,GPS}$, P and $\sigma_{vert\_iono\_gradient}$ to mitigate the effects of ionospheric anomalies for GAST A, B or C, the GAST D user can be provided with non-inflated parameters for use in GAST D where airborne monitoring is employed to address the ionospheric anomaly errors. This enables GAST D service to have improved availability.

7.5.6.1.4 *Bounding of ionospheric anomaly errors*. As stated above, ionospheric anomalies may be addressed by inflating one or more of the parameters: σ_{pr_gnd}, $\sigma_{vert\_iono\_gradient}$, the ephemeris decorrelation parameter (P), the ephemeris missed detection parameters $K_{md\_e,GPS}$ and $K_{md\_e,GLONASS}$. The ground subsystem is responsible for providing values in these parameters such that the error is appropriately bounded by the VPL and HPL computations at the output of a fault free receiver. In GAST D, responsibility for mitigation of errors due to anomalous ionospheric conditions has been divided between the airborne subsystem and the ground subsystem. Although GAST D still requires the protection levels to bound the errors (as described in 7.5.3.1), they are not required to bound the errors that result from an anomalous ionospheric event as is the case for GAST C. Hence, the protection levels as computed with PD, $K_{md\_e\_D,GLONASS}$, $K_{md\_e\_D,GPS}$, and $\sigma_{vert\_iono\_gradient\_D}$ must bound the error for all error sources as discussed in 3.6.7.1.2.1.1.2 except for the errors due to anomalous ionospheric conditions. The protections level computations must bound the nominal ionospheric errors.

7.5.6.1.5 *Dual solution ionospheric gradient monitoring*. Another component of the airborne mitigation of errors induced by ionospheric anomalies is by the use of dual position solutions computed simultaneously with two different carrier smoothing time constants (see 7.19.3). This dual solution computation has two purposes. Firstly, taking the difference of two corrected pseudo-range measurements as detection statistics allows the filter build-up errors on each satellite, due to large differences in ionospheric gradients between the ground measurements and airborne measurements, to be directly observable. Hence a threshold can be applied to these detection statistics in order to detect a large portion of the ionospheric anomalies. The second application of the dual solutions is to compute a bound for the 30-second smoothed position (excluding the impact of ionospheric anomalies). The data provided by the ground segment allows a protection level bound to be computed for the 100-second solution. By adding the direct observation of the magnitude of the difference between the 30-second smoothed position and the 100-second smoothed position, to the protection level computation, a protection level is obtained, which is guaranteed to bound the 30-second position solution with the required $1x10^{-7}$/approach. This allows airborne equipment, with an active service type of D to provide equivalent bounding performance, as required for approaches to Category I minima even though the 30-second solution is used to develop the guidance.

7.5.6.1.6 *Requirements for FAST D ground subsystems to support mitigation of errors caused by ionospheric anomalies*. Although much of the responsibility for mitigation of ionospheric errors is allocated to the airborne segment, there is a requirement for FAST D ground subsystems that is necessary to support mitigation of such effects. Appendix B, 3.6.7.3.4 specifies that the ground subsystem is responsible for ensuring mitigation of ionospheric spatial delay gradients. The ground subsystem ensures that the value of the maximum corrected pseudo-range error (E_{IG}) computed from the Type 2 data does not exceed 2.75 metres at all LTPs associated with runways that support GAST D procedures. One option available to the manufacturer is to restrict the distance between the GBAS reference point and the LTP. It may, in some cases, be desirable to allow GAST D service at LTPs where E_{IG} exceeds 2.75 m. This could have an impact on the availability of the GAST D service for that particular approach. The service provider should then evaluate whether the expected performance is adequate for the intended service. See 7.5.13.1 for guidance on how availability assessment can be done.

7.5.6.1.7 *Ionospheric anomaly threat models used for GAST D validation*. As discussed above, the mitigation of errors that could be induced by ionospheric anomalies is accomplished through a combination of airborne and ground system monitoring. The effectiveness of the required monitoring has been demonstrated through simulation and analysis and the maximum errors at the output of the monitoring have been shown to be consistent with airworthiness certification criteria for a range of anomalies described below. This range of anomalies is described in terms of a "standard threat space" consisting of an ionospheric anomaly model which defines physical attributes of the ionospheric anomaly. The model described in 7.5.6.1.7.1 is a conservative rendition of the model developed for the continental United States. This model has been shown to bound the ionospheric threat evaluated in several other mid-latitude regions, relative to the magnetic equator. Recent data collected in some low-latitude regions, relative to the magnetic equator, has shown ionospheric conditions associated with local ionospheric density depletion ("plasma bubbles") that exceed this threat model. Research has resulted, for example, in a reference low-latitude threat model for the Asia-Pacific Region by a dedicated Ionospheric Studies Task Force (APAC ISTF). The threat models define an ionospheric environment for which the standardized monitoring is known to produce acceptable performance on a per-pseudo-range basis. Each service provider should evaluate whether the standard threat space model described below is appropriate for the ionospheric characteristics in the region where GBAS is intended to support GAST D service. This evaluation should always be performed, regardless of the latitudes involved. If a service provider determines that the ionospheric behaviour is not adequately characterized by this threat model (e.g. for a region of uniquely severe ionospheric behaviour), that service provider must take appropriate action to ensure the users will not be subjected to ionospheric anomalies with characteristics outside the range of the standard threat space. The service provider may elect to:

1. alter the characteristics of its ground subsystem; and/or
2. introduce additional monitoring (internal or external to the GBAS); and/or
3. introduce other operational mitigations that limit users' exposure to the extreme ionospheric conditions.

Potential ground subsystem changes which could achieve this risk reduction include tighter siting constraints (see 7.5.6.1.6) and improved ground subsystem monitoring performance (Appendix B, 3.6.7.3.4). Another mitigation strategy is monitoring of space weather (external to the GBAS system) in conjunction with operational limitations on the use of the system during predicted periods of severely anomalous ionospheric activity. Combinations of these strategies may be used to ensure that the GAST D user is not subjected to ionospheric anomalies outside the standard threat space.

7.5.6.1.7.1 *Ionosphere anomaly model: moving wedge*. This models a severe ionospheric spatial gradient as a moving wedge of constant, linear change in slant ionosphere delay, as shown in Figure D-7. The key parameters of this model are the gradient slope (g) in mm/km, the width (w) of the wedge in km, the amplitude of the change in delay (D) in m, and the speed (v) at which the wedge moves relative to a fixed point on the ground. These values are assumed to remain (approximately) constant over the period in which this wedge affects the satellites tracked by a single aircraft completing a GAST D approach. While the width of the wedge is small, the "length" of the wedge in the East-North coordinate frame (i.e. how far the "ionospheric front" containing the wedge extends) is not constrained.

In this model, the upper bound on g is dependent on wedge speed as specified in Table D-7. This value is not dependent on satellite elevation angle. Because g is expressed in terms of slant delay, no "obliquity" correction from zenith delay is needed. The width w can vary from 25 to 200 km. The maximum value of D is 50 m. Note that, to make the model consistent, D must equal the product of slope g and width w. In cases where slope and width each fall within their allowed ranges, but their product D exceeds the 50-metre bound, that combination of slope and width is not a valid point within the threat model. For example, both g = 400 mm/km and w = 200 km are individually allowed, but their product equals 80 metres. Since this violates the constraint on D, a wedge with g = 400 mm/km and w = 200 km is not included in this threat model.

Note.— In the GAST D validation, it was assumed that each simulated wedge model is applied to the two ranging sources that produced the worst-case position errors. However, the numbers of wedges and impacted ranging sources depend on the ionospheric characteristics in the region where GBAS is intended to support GAST D service.

Table D-7. Upper bound on gradient slope

Propagation speed (v)	*Upper bound on gradient slope (g)*
$v < 750$ m/s	500 mm/km
$750 \leq v < 1500$ m/s	100 mm/km

7.5.6.1.8 *Ionosphere gradient mitigation validation*

7.5.6.1.8.1 Because the mitigation responsibility for spatial ionosphere gradients is shared between the airborne and ground subsystems, this section includes guidance for modeling the critical airborne components (e.g. aircraft motion and monitoring) which will enable a ground manufacturer to validate the mitigation of spatial ionosphere gradients from a total system perspective. The validation can take into account the combination of ground and airborne monitors for the detection of gradients. When accounting for the combination of monitors, the correlation or independence between the monitors needs to be considered. Monitor performance should also consider the effective time between independent samples of each monitor's test statistic. Modeling of the ionosphere monitoring should include re admittance criteria for an excluded satellite, as appropriate per the ground subsystem design and DO-253D.

7.5.6.1.8.2 This section also includes test scenario guidance to help ensure all possible airborne position, ground reference point, approach direction, and gradient direction orientations are considered during validation.

7.5.6.1.8.3 Airborne monitor implementation

Validation may account for the following airborne monitors:

a) airborne code carrier divergence filtering as described in 2.3.6.11 of DO-253D;

b) differential RAIM used for satellite addition as described in 2.3.9.6.1 of DO-253D; and

c) dual solution pseudo-range ionospheric gradient monitoring as described in 2.3.9.7 of DO-253D.

7.5.6.1.8.3.1 In assessing the probability of missed detection, the contribution of all noise sources to the test statistic used for the airborne code carrier divergence monitor, excluding the effects of the ionosphere, can be assumed to have a normal distribution with a zero mean and a standard deviation of 0.002412 m/s.

7.5.6.1.8.3.2 In assessing the probability of missed detection, the contribution of all noise sources to the test statistic used for the dual solution pseudo-range ionospheric gradient monitor can be assumed to have a normal distribution with a zero mean and a standard deviation of 0.1741 m.

7.5.6.1.8.3.3 Note that the prior probability of the gradient that can be utilized during validation of 3.6.7.3.4 applies for these airborne monitors as well.

7.5.6.1.8.4 *Modeling airborne positioning and speed*

The airborne speed and position can be modeled working backward from the threshold crossing time using the following four values:

a) speed at landing;

b) amount of time at landing speed;

c) deceleration rate; and

d) speed at start of deceleration.

7.5.6.1.8.4.1 Figure D-8 illustrates how these four values are used to define a speed profile and Table D-8 shows the values that define the family of curves to be used in determination of GAST D broadcast parameters for a specific IGM design.

Table D-8. Airborne speed profile from initial position to LTP

Landing ground speed (knots)	*Time at landing speed (seconds)*	*Deceleration rate (knots/s)*	*Ground speed at start of deceleration (knots)*
161	50	1.1	290
148	50	1.1	277
135	50	1.1	264

Note.— Modeling aircraft altitude is not necessary.

7.5.6.1.8.4.2 Figure D-9 shows the approach speed profiles based on the values in Table D-8 in terms of ground speed versus time until the aircraft reaches the landing threshold point.

7.5.6.1.8.5 *Gradient, airborne position, ground reference point, and approach direction considerations*

7.5.6.1.8.5.1 Figure D-10 illustrates the basic anomalous ionospheric scenarios (A-D) that constitute a threat. For a given ground station installation, the ground manufacturer should demonstrate valid mitigation for any ionosphere gradient/airborne/approach orientations corresponding to that particular installation.

7.5.6.1.8.5.2 Validation test scenarios should also address the timing component for each orientation. For example, for a given scenario, an approach should be executed at least at one minute intervals.

7.5.7 *Aircraft receiver contribution to corrected pseudo-range error*. The receiver contribution is bounded as described in section 14. The maximum contribution, used for analysis by the GBAS provider, can be taken from the accuracy requirement, where it is assumed that $\sigma_{receiver}$ equals RMS_{pr_air} for GBAS Airborne Accuracy Designator A equipment.

7.5.8 *Airframe multipath error*. The error contribution from airframe multipath is defined in Appendix B, 3.6.5.5.1. Multipath errors resulting from reflections from other objects are not included. If experience indicates that these errors are not negligible, they must be accounted for operationally or through inflation of the parameters broadcast by the ground (e.g. σ_{pr_gnd}).

7.5.9 *Ephemeris error uncertainty*. Pseudo-range errors resulting from ephemeris errors (defined as a discrepancy between the true satellite position and the satellite position determined from the broadcast data) are spatially decorrelated and will therefore be different for receivers in different locations. When users are relatively close to the GBAS reference point, the residual differential error due to ephemeris errors will be small and both the corrections and uncertainty parameters σ_{pr_gnd} sent by the ground subsystem will be valid to correct the raw measurements and compute the protection levels. For users further away from the GBAS reference point, protection against ephemeris failures can be ensured in two different ways:

a) the ground subsystem does not transmit the additional ephemeris error position bound parameters. In this case, the ground subsystem is responsible for assuring integrity in case of satellite ephemeris failures without reliance on the aircraft calculating and applying the ephemeris bound. This may impose a restriction on the distance between the GBAS reference point and the decision altitude/height depending upon the ground subsystem means of detecting ranging source ephemeris failures. One means of detection is to use satellite integrity information broadcast by SBAS; or

b) the ground subsystem transmits the additional ephemeris error position bound parameters which enable the airborne receiver to compute an ephemeris error bound. These parameters are: coefficients used in the ephemeris error position bound equations ($K_{md\_e\_()}$, where the subscript () means either “GPS”, “GLONASS”, “POS, GPS” or “POS, GLONASS”), and the ephemeris decorrelation parameters (P). The ephemeris decorrelation parameter (P) in the Type 1 or Type 101 message characterizes the residual error as a function of distance between the GBAS reference point and the aircraft. The value of P is expressed in m/m. The values of P are determined by the ground subsystem for each satellite. One of the main factors influencing the values of P is the ground subsystem monitor design. The quality of the ground monitor will be characterized by the smallest ephemeris error that it can detect. The relationship between the P parameter and the smallest detectable error ε_{ephdet} for a particular satellite, i, can be approximated by $P_i = \varepsilon_{ephdet} / R_i$ where R_i is the smallest of the predicted ranges from the ground subsystem reference receiver antenna(s) for the period of validity of P_i. Since R_i varies with time, the P parameters values are time dependent as well. However, it is not a requirement for the ground subsystem to dynamically vary P. Static P parameters can be sent if they properly ensure integrity. In this latter case, the availability would be slightly degraded. Generally, as ε_{ephdet} becomes smaller, overall GBAS availability improves.

7.5.10 *Ephemeris error/failure monitoring*. There are several types of monitoring approaches for detecting ephemeris errors/failures. They include:

a) *Long baseline*. This requires the ground subsystem to use receivers separated by large distances to detect ephemeris errors that are not observable by a single receiver. Longer baselines translate to better performance in smallest detectable error;

b) *SBAS*. Since SBAS augmentation provides monitoring of satellite performance, including ephemeris data, integrity information broadcast by SBAS can be used as an indication of ephemeris validity. SBAS uses ground subsystem receivers installed over very long baselines, therefore this provides optimum performance for ephemeris monitoring and thus makes small errors detectable;

c) *Ephemeris data monitoring*. This approach involves comparing the broadcast ephemeris over consecutive satellite orbits. This monitoring assumes that the only threat of failure is due to a failure in the ephemeris upload from the constellation ground control network so that the ephemeris is inconsistent with previously broadcast ephemeris; and

d) *Delta-V (change in velocity) monitoring*. This monitoring covers the cases of uncommanded satellite manoeuvres out of view with unchanged ephemeris.

7.5.10.1 The monitor design (for example, its smallest detectable error) is to be based upon the integrity risk requirements and the failure model the monitor is intended to protect against. A bound on the GPS ephemeris failure rate can be determined from the reliability requirements defined in Chapter 3, 3.1.7.3.1.4, since such an ephemeris error would constitute a major service failure.

7.5.10.2 The GLONASS control segment monitors the ephemeris and time parameters, and in case of any abnormal situation it starts to input the new and correct navigation message. The ephemeris and time parameter failures do not exceed 70 m of range errors. The failure rate of GLONASS satellite including the ephemeris and time parameter failures does not exceed 4×10^{-5} per satellite per hour.

7.5.11 *Ground reference receiver faults*. A typical GBAS ground subsystem processes measurements from 2 to 4 reference receivers installed in the immediate vicinity of the reference point. For GAST A, B, C and D, the aircraft receiver is protected against a large error or fault condition in a single reference receiver by computing a protection level based on the B parameters from the Type 1 or Type 101 message and comparing that protection level to the alert limit. Ground subsystem compliance with the GAST A, B, C and D integrity risk (Appendix B, 3.6.7.1.2.2.1) is demonstrated taking into account the protocols required of the airborne subsystem (Appendix B, 3.6.5.5.1.2) and explicit monitoring required in the airborne subsystem. Alternative system architectures with sufficiently high redundancy in reference receiver measurements may employ processing algorithms capable of identifying a large error or fault in one of the receivers. This may apply for a GRAS network with receivers distributed over a wide area and with sufficient density of ionospheric pierce points to separate receiver errors from ionospheric effects. The integrity can then be achieved using only the protection levels for normal measurement conditions (VPL_{H0} and LPL_{H0}), with appropriate values for K_{ffmd} and σ_{pr_gnd}. This can be achieved using the Type 101 message with the B parameters excluded.

7.5.11.1 *GAST D ground reference receiver faults*. For GAST D, there is an additional standardized monitor implemented in the airborne receiver used to maintain the single reference receiver faulted measurement condition integrity regardless of the satellite geometry used in the aircraft. The aircraft receiver computes a position error estimate based on the B parameters and compares that error estimate directly to a threshold set as low as possible consistent with acceptable continuity risk. Although the monitor is mechanized in the airborne subsystem, the ground subsystem must meet specific requirements for the monitor to provide the required protection. The integrity performance depends on the assumed a priori failure rate (Appendix B, 3.6.7.1.2.2.1.2) and the probability of missed detection of the monitor. The a priori rate of a single reference receiver providing faulted measurements is required to be less than 1×10^{-5} per 150 seconds. The rate per individual receiver is dependent upon the number of reference receivers in the ground subsystem. For example, with four reference receivers the rate per receiver would be required to be less than 2.5×10^{-6} per 150 seconds. This a priori rate is achieved through a combination of receiver design requirements and proper reference receiver siting and operational constraints. Because conditions during system operation vary, ground subsystems may monitor receiver outputs to verify continued compliance with the requirement. The integrity performance also depends on the probability of missed detection (P_{md}) performance of the monitor implemented in the airborne equipment. The P_{md} performance of this monitor in turn depends on the characteristics of the errors that confound the observability of a reference failure. This is also true for the existing protection level integrity risk equations associated with faulted measurement conditions. The ground subsystem is required to broadcast integrity parameters that bound the errors such that a normal distribution can sufficiently characterize the errors and the P_{md} can be estimated (Appendix B, 3.6.7.1.2.2.1.1 and 3.6.7.2.2.4.1).

7.5.11.2 *GAST D ground reference receiver fault magnitude bounding*. Because the airborne subsystem implements the monitor as defined in the MOPS, it is possible to compute the size of the largest error that can result from the failure of a single reference receiver with a probability of greater than 1×10^{-9}. The calculated maximum size of the error will depend on the assumed a priori failure rate (Appendix B, 3.6.7.1.2.2.1.1) and the probability of missed detection of the monitor. The monitor P_{md} is dependent on the monitor threshold which is computed by the airborne equipment as a function of the geometry and the error distribution associated with the H_1 hypothesis.

7.5.12 *Range domain monitoring requirements for GAST D*. To support equivalent safety of Category II/III operations, requirements beyond the basic "signal-in-space" requirements defined for GAST A, B and C are necessary. These requirements include performance requirements for monitors implemented to detect pseudo-range errors. Two requirements apply to the post monitoring error in the corrected pseudo-range due to specific ranging source failures (Appendix B, 3.6.7.3.3.2 and 3.6.7.3.3.3). In both cases, the requirement applies to the probability of missed detection as a function of the size of an error due to the failure in the 30-second smoothed pseudo-range after the correction is applied.

1) The first requirement constrains the P_{md} performance of the specified ranging source failures without regard for the a priori probability of the ranging source failure. The bound for a ground subsystem's monitor performance defined in Appendix B, 3.6.7.3.3.2 is illustrated in Figure D-11. GAEC-D equipment will use the 30-second differential corrections to form the position solution used for deviation guidance. The limits of the constraint region define the minimum P_{md} that the ground subsystem must ensure for any single ranging source failure condition.

Note.— The example compliant P_{md} in Figure D-11 is based on a hypothetical monitor with a threshold set to 0.8 m and monitor noise of 0.123 m. The curve is for illustration purposes only and does not represent the performance of any specific monitor design.

2) The second requirement constrains the conditional probability of the P_{md} performance of the specified ranging source given the a-priori failure probability for the specific ranging source failure. The conditional probability bound, $P_{md} \times P_{apriori}$, for a ground subsystem's monitor performance defined in Appendix B, 3.6.7.3.3.3 is illustrated in Figure D-12. The prior probability of each ranging source failure ($P_{apriori}$), used to evaluate compliance, should be the same value that is used in the analysis to show compliance with the bounding requirements for FAST C and D (see 7.5.3.1).

7.5.12.1 *Verification of ground subsystem compliance with range domain monitoring requirements*

Verifying that a ground system design complies with the monitor requirements provided in Appendix B, 3.6.7.3.3.2 and 3.6.7.3.3.3 is achieved by a combination of testing and analysis. The requirements take the form of a constraint on the probability of missed detection as a function of the size of an error in the corrected pseudo-range. The general process that may be used to verify that a specific monitor, included as part of a ground subsystem design, meets the specified performance is as follows:

- Identify the threat space for each fault mode to be considered. (The requirements in Appendix B, 3.6.7.3.3 apply to four specific fault modes). These fault modes (i.e. the threat space), which may be used for evaluating compliance with a ground subsystem design, are provided in 7.5.12.1.3.1 through 7.5.12.1.3.4. These fault modes and fault combinations constitute the threat space. These threat space definitions represent what at least one State has found acceptable as an assumed threat space for each fault mode.

- Identify the airborne configuration space. The airborne system requirements introduce constraints on the design and performance of airborne equipment. These constraints define the range of critical airborne parameters of the configuration space for each fault mode and/or monitor that must be protected by the ground subsystem. For example, the bandwidth and correlator spacing of a compliant airborne receiver will conform to the requirements in 8.11.4 through 8.11.7.1. These are two of the critical parameters of the airborne configuration space for the satellite signal deformation fault mode. A critical airborne parameter directly influences how each point in the threat space translates to an error in the differentially corrected pseudo-range.

- An error analysis is done considering the specific monitor design under consideration given the full range of fault characteristics that comprise the threat space. For each characterized fault, the error that would be induced in the corrected pseudo-range (using the 30-second smoothed pseudo-ranges and pseudo-range corrections) is computed given the full range of critical airborne parameters that comprise the airborne configuration space.

- When assessing the compliance of a ground subsystem design, the performance is characterized by relevant statistical measures. Any monitor is subject to noise and therefore the performance may be characterized by the false detection rate and the missed detection probability. Both of these performance metrics are specified in the ground requirements in Appendix B by means of a not-to-exceed constraint. The missed detection probability performance is constrained by the requirements in Appendix B, 3.6.7.3.3.2 and 3.6.7.3.3.3. The false detection rate performance is constrained by the continuity requirements given in Appendix B, 3.6.7.1.3.2. It should be understood that the ground subsystem must meet all requirements in the Standards. It is possible that the performance of individual monitors may be further constrained by other requirements, such as the ground subsystem integrity risk requirement in Appendix B, 3.6.7.1.2.1.1.1. Ground station accuracy performance may have an impact on airborne and ground monitor performance. In the validation of requirement feasibility a GAD C4 performance was assumed to account for instance for single reference receiver faults. Use of lower performance categories may have an availability or continuity impact and should be investigated in the design process.

7.5.12.1.1 *Compliance of ground subsystem monitoring with continuity requirements*. The compliance with the false detection rate (continuity) may be established based on collected real data combined with analysis and/or simulation. The required number of truly independent samples should be sufficient to adequately characterize the cumulative distribution function (CDF) of the monitor discriminator, which is compared to the threshold set for the monitor. The fault free noise CDF must be such that for the threshold set in the monitor the false detection probability is smaller than that required to support continuity. An allocation of the continuity to each monitor must be done with consideration given to the overall specified probability of false detection (Appendix B, 3.6.7.1.3.2). The achieved probability of false detection is determined by extrapolation of the observed trends in the measured CDF. Additionally, detection events in the ground system may be logged and if, over time, the false detection rates are not maintained at the required levels, thresholds may be adjusted as the result of a maintenance action to correct the problem.

7.5.12.1.2 *Compliance of ground subsystem monitoring with integrity requirements*. The compliance with the missed detection probability (integrity risk) is typically established based on simulation and analysis. (Given the low allowed probability of observing actual faults, collection of enough real data to establish that the probability is met with any statistical significance is impossible.) The threat space for the fault mode is divided into discrete intervals across the relevant parameters that define the fault behavior. The total space of potential faults is represented by a multidimensional grid of discrete points that span the threat space. The airborne configuration space is also discretized i.e. represented by a multidimensional grid of discrete (critical parameter) points. A simulation is used to compute the expected pseudo-range error performance for each point in the threat space, each possible airborne configuration and the ground receiver function with the monitors. The worst-case error in the corrected pseudo-range is computed as a function of the discriminator value for the monitor addressing the threat (assuming no noise at this point). This also makes it possible to determine the discriminator value as a function of the worst-case error in the corrected pseudo-range (the inverse mapping). The missed detection probability is obtained by superimposing noise based on a conservative noise model (using an over bound of the CDF that was generated by the real data), on the discriminator determined from the worst-case differential range. This can be done either analytically or by simulation. The mapping from discriminator to worst-case error in the corrected pseudo-range and the noise levels applied may have further dependencies (for instance satellite elevation), and the established missed detection probability is therefore also a function of a set of parameters that constitute the detection parameter space which is divided into discrete intervals as well, i.e. represented by a multidimensional grid of discrete (detection parameter) points. The final missed detection probability is obtained by searching for the worst case when evaluating all the grid points in the detection parameter space.

7.5.12.1.3 *Threat space and relevant airborne configuration space for each fault mode*

7.5.12.1.3.1 *Code carrier divergence threat*

7.5.12.1.3.1.1 The code carrier divergence threat is a fault condition in a GPS satellite that causes the code and carrier of the broadcast signal to diverge excessively.

7.5.12.1.3.1.2 A code carrier divergence fault may cause a differential ranging error in one or both of the following cases: (1) the aircraft and ground filter designs are not identical, and (2) the aircraft and ground filters start at different times. Both of these cases can result in a difference between the transient responses of the filters in the presence of a CCD event. The critical airborne parameters are:

— The time of initialization of the airborne smoothing filter relative to the fault onset.

— The smoothing filter type (fixed time constant 30 seconds or adjustable time constant equal to time from initialization up to 30 seconds and thereafter fixed).

— The carrier code divergence rate monitoring required in airborne system for GAST D and the associated fault reaction.

— The time period from initialization of the airborne smoothing filter to the incorporation of the measurement in the position solution.

7.5.12.1.3.2 *Excessive acceleration threat*

The excessive acceleration threat is a fault condition in a GPS satellite that causes the carrier (and code in unison) of the broadcast signal to accelerate excessively. The threat space is one-dimensional and corresponds to all possible accelerations including ramps and steps.

7.5.12.1.3.3 *Ephemeris error threat*

The ephemeris error threat is a fault condition that causes the broadcast ephemeris parameters to yield excessive satellite position errors perpendicular to the ground subsystem's line of sight to the satellite. The resultant differential range error is the satellite position error (true compared to broadcast ephemeris) multiplied by the distance between ground subsystem and airborne and scaled by the inverted distance to the satellite. It is bounded by the product of the P parameter (see 7.5.9) and the distance between the user and the ground subsystem. The critical airborne parameter for the ephemeris error threat is therefore the distance between the user and the ground subsystem. Satellite ephemeris faults are categorized into two types, A and B, based upon whether or not the fault is associated with a satellite manoeuvre. There are two subclasses of the type A fault, A1 and A2.

7.5.12.1.3.3.1 *Ephemeris error threat type B*

7.5.12.1.3.3.1.1 The type B threat occurs when the broadcast ephemeris data is anomalous, but no satellite manoeuvre is involved.

7.5.12.1.3.3.1.2 The GBAS ground subsystem can monitor against such faults by comparing current and prior ephemerides. One example of a type B fault: no manoeuvre occurs, an incorrect upload is sent to a satellite, and the satellite subsequently broadcasts an erroneous ephemeris.

7.5.12.1.3.3.2 *Ephemeris error threat type A1*

7.5.12.1.3.3.2.1 The type A1 threat occurs when the broadcast ephemeris data is anomalous following an announced and intentional satellite manoeuvre.

7.5.12.1.3.3.2.2 Prior ephemerides are of limited use in the detection of type A1 failures because of the intervening manoeuvre. The GBAS ground subsystem will need to monitor ranging data directly as part of ephemeris validation. One example of a type A1 fault: a satellite is set unhealthy, a manoeuvre is executed, an incorrect upload is sent to the satellite, the satellite is reset to healthy and subsequently broadcasts an erroneous ephemeris.

7.5.12.1.3.3.3 *Ephemeris error threat type A2*

7.5.12.1.3.3.3.1 The type A2 threat occurs when the broadcast ephemeris data is anomalous following an unannounced or unintentional satellite manoeuvre.

7.5.12.1.3.3.3.2 Prior ephemerides are of limited use in the detection of type A2 failures because of the intervening manoeuvre. The GBAS ground subsystem will need to monitor ranging data directly as part of ephemeris validation. One example of a type A2 fault: a satellite is set healthy, an intentional manoeuvre or unintentional thruster firing occurs, and the satellite continues to broadcast the pre-manoeuvre (now erroneous) ephemeris.

7.5.12.1.3.4 *Signal deformation threat*

7.5.12.1.3.4.1 The signal deformation threat is a fault condition in the GPS satellite that causes the broadcast C/A code to be distorted so that the correlation peaks used for tracking in the airborne system and the ground system are deformed. The extent of the deformation depends on the receiver bandwidth and the resulting tracking error depends on where the correlator points used for code tracking are located (along the correlator peak).

7.5.12.1.3.4.2 The signal deformation monitoring threat space is defined in section 8. There are three fault types A, B, C.

7.5.12.1.3.4.3 Most satellites naturally show some degree of correlator peak deformation and these are referred to as natural (correlator measurement) biases. These natural biases may vary over time.

7.5.12.1.3.4.4 A fault condition (onset) will appear as a step in the raw (unfiltered) code measurement both in the airborne system and in the ground. If both system had exactly the same front end (RF and IF filtering, sampling method), correlator type and correlator spacing the error would be the same in ground and air and no differential error would occur. But typically that is not the case.

7.5.12.1.3.4.5 The step is filtered by the smoothing algorithm in the ground and in the airborne systems and the steady state differential error will gradually manifest itself in a 60 – 90 second time frame when using corrections from message Type 11 (or 200 – 300 seconds for message Type 1).

7.5.12.1.3.4.6 If a fault (A, B or C) occurs in a satellite it will take about 60 – 90 seconds before the steady state for the error and the monitor discriminator is reached. In essence the fault onset starts a race between the increasing differential error and the monitor discriminator as it moves towards the threshold. This is referred to as the transient state. If the range error reaches the limit that must be protected while the discriminator is not yet past the threshold with sufficient margin to guarantee the required detection probability, the requirement is not met. Both the steady state and the transient state performance must be evaluated.

7.5.12.1.3.4.7 The critical airborne parameters for the signal deformation threat are:

- The time period from initialization of the airborne smoothing filter to incorporation of the measurement in the position solution.

- The parameters that have constraints defined in the GAST D standard (Attachment B) including:
    - Correlator type Early-Late (EL) or Double Delta (DD)
    - Correlator spacing
    - GPS signal bandwidth (from reception at antenna through RF, IF, and A/D conversion)
- Group delay (from reception at antenna through RF, IF, and A/D conversion).

7.5.12.1.3.4.8 Apart from the discrete choice of EL versus DD the configuration space is two-dimensional (correlator spacing and bandwidth). The filters implemented in the airborne system may be of different types (Butterworth, Chebychev, Elliptical, etc.). The group-delay constraints will exclude some of these filters. However the possible variation in receiver design introduces additional dimensions that the ground subsystem manufacturer must consider. The filter types are part of the configuration space to be considered.

7.5.13 *Ground subsystem requirements and airworthiness performance assessment*. Airworthiness certification of autoland systems, for use in Category II/III operations, requires an assessment of landing performance under fault-free and faulted conditions. More information, describing how the technical standards can be used to support an assessment, may be found in RTCA document DO-253D, "Minimum Operational Performance Requirements for Airborne Equipment using the Local Area Augmentation System", Appendix J.

7.5.13.1 *Estimating availability*. It may, in some cases, be necessary to estimate the expected availability for an airport or a runway end. Examples are cases where the mask angles are high or E_{IG} exceeds 2.75 m. When the maximum value of 2.75 m is established for the E_{IG}, this is based on availability simulations where conservative assumptions are used for the constellation and aircraft performance, and the target is to provide the GAST D service with an availability of 0.999 for Category III airports around the world. Therefore, the E_{IG} limit of 2.75 m guarantees an availability that is higher than 0.999 under the worst-case assumptions, when only the residual ionospheric component is considered. However, for many locations, the availability may still be within this limit for $E_{IG} > 2.75$ m. Also, Chapter 3, Table 3.7.2.4-1 specifies a range of availability requirements, and the service provider must assess which availability is needed for the operation in question. In case GAST D service is provided to an LTP where E_{IG} exceeds 2.75 m, no assumptions can be made on availability, and the service provider is then responsible for estimating the availability according to the guidance outlined below, making assumptions on airborne performance. The maximum allowable undetected airborne error in the position domain ($MaxE_V$, $MaxE_L$) as derived from the touchdown airworthiness requirements, can be assumed to be 10 m or higher.

7.5.13.2 In general, availability at a given approach can be estimated by taking into account the ground station parameters transmitted under normal conditions, to compute airborne VEB/LEB and VPL/LPL and to compare against VALs/LALs for a particular approach. The result of the airborne geometry screening is a separate component of the availability. For cases where E_{IG} exceeds 2.75 m, it is sufficient to consider the availability resulting from airborne geometry screening, which will drive availability rather than protection levels.

7.5.13.3 At a minimum, the duration of the simulation must consider all constellation states (24 hours for GPS). When taking additional probabilistic considerations into account, e.g. scintillation probability, longer simulation durations may be required.

7.5.13.4 VPL/LPL should be compared against VAL/LAL at 200 ft (or at the threshold if that is further away from the GBAS reference point).

7.5.13.5 VEB/LEB should be compared against VAL/LAL at 23 NM or wherever the approach is intended to start.

7.5.13.6 The constellation to be used is the standard expandable (27 SV) constellation, as defined in the *GPS Standard Positioning Service (SPS) Performance Standard, Fourth Edition* with N-1 and N-2 state probabilities as given in Table D-9.

7.5.13.7 If the availability requirement is met under these conditions, no further analysis is required. If additional analysis is needed, a less conservative constellation can be used, e.g. a contemporary Yuma almanac. The same constellation state probabilities may be used, or, if possible, probabilities applicable to that constellation.

Table D-9. GPS constellation state probabilities

GPS constellation state	*N satellites operating*	*N-1*	*N-2*	*N-3*	*N-4*
Probability	0.95	0.035	0.015	0	0

7.5.13.8 The ground station parameters are those transmitted by the particular ground subsystem.

7.5.13.9 The assumptions for airborne parameters are:

- AAD B;
- aircraft speed: 160 kts;
- σ_{divg} : 0 (assumes smoothing filter steady state);
- σ_{noise} : 0.15 (worst-case within AAD B);
- $MaxE_v$, $MaxE_L$: 10 m;
- $MaxS_{vert} = MaxE_v / E_R$;
- $MaxS_{Lat} = MaxE_L / E_R$;
- $MaxS_{vert2} = MaxE_v / \max(E_{IG})$;
- $MaxS_{Lat2} = MaxE_L / \max(E_{IG})$;
- E_R is the maximum undetected pseudo-range error for the GAST D approach, either 1.6 m or E_{IG} for the approach, whichever is larger; and
- the airborne receiver is capable of simultaneously tracking and continuously decoding the associated navigation data for at least 12 ranging sources.

7.5.14 *GBAS signal-in-space time-to-alert*. The GBAS signal-in-space time-to-alert (SIS TTA) is defined below within the context of GBAS based upon the TTA definition in Chapter 3, 3.7.1. The GBAS SIS TTA is the maximum allowable time elapsed from the onset of an out-of-tolerance condition at the output of the fault-free aircraft GBAS receiver until the aircraft GBAS receiver annunciates the alert. This time is a never-to-be-exceeded limit and is intended to protect the aircraft against prolonged periods of guidance outside the lateral or vertical alert limits.

7.5.14.1 There are two allocations made to support the GBAS SIS TTA in the Standards.

1) The first allocation, the ground subsystem TTA for SIS requirements, limits the time it takes the ground subsystem to provide an indication that it has detected an out-of-tolerance situation considering the output of a fault-free GBAS receiver. The indication to the aircraft element is either: a) to broadcast Type 1 (and Type 11 if broadcast) or Type 101 messages indicating the condition (in accordance with Appendix B, 3.6.7.3.2.1), or b) terminate all VDB transmissions. The ground subsystem is allocated 3 seconds to take either action.

   For airborne receivers using GAST C, at least one Type 1 message signaling the out-of-tolerance condition must be received by a fault-free airborne receiver within the message time out to meet the SIS TTA. For airborne receivers using GAST D at least one of each (Type 1 and Type 11) message with the same applicable modified z-count (and the same set of satellites) must be received by a fault-free airborne receiver within the message time out to meet the SIS TTA. Because shutting down the VDB may result in an exposure time longer than the SIS TTA for satellite faults, this option is recommended only under conditions where the VDB transmission does not meet its associated performance requirements (reference Appendix B, 3.6.7.3.1.1.).

In addition, for ground subsystems that support GAST D monitoring performance requirements, the ground subsystem is allocated only 1.5 seconds to detect a condition producing out-of-tolerance errors in 30-second corrected pseudo-ranges and to either exclude the ranging source measurements from the broadcast or mark them as invalid. This time-to-detect and broadcast is similar in definition, but not equivalent in function to the ground subsystem TTA, as an out-of-tolerance condition in a single ranging source does not necessarily lead to out-of-tolerance guidance information.

2) The second allocation for the GBAS signal-in-space time-to-alert provides for the possible temporary loss of message reception. Airborne equipment operating with GAST C active will generate an alert if a Type 1 message is not received within 3.5 seconds when on the final stages of approach. When the airborne equipment is below 200 ft height above the runway threshold (HAT), airborne equipment operating with GAST D active will generate an alert or change the active service type if a set of Type 1 and Type 11 messages with the same modified z-count are not received within 1.5 seconds. Note that these time-outs will also dictate the achieved signal-in-space time-to-alert when the ground subsystem ceases VDB transmissions instead of broadcasting messages as an alert to the airborne equipment.

Requirements on how quickly the receiver outputs must be invalidated (so annunciating an alert), as well as additional conditions requiring the outputs to be indicated as invalid, are contained in RTCA DO-253D. For example, there is a requirement for the aircraft GBAS receiver position determination function to use the most recently received message content and reflect the message content in its outputs within 400 ms. The SIS TTA is defined by start and stop events at the same point in the aircraft. Any processing that is common to generating outputs under both normal conditions and alert conditions will not change the achieved SIS TTA. That is, this common period acts like a lag to both the start event and end event and does not affect the total exposure time to the aircraft. Within the GBAS receiver, the outputs under both of these conditions must meet the same latency requirement, so large differences are not expected. SIS TTA will differ from ground subsystem TTA by a value equal to the difference between receiver processing time and receiver time to invalidate outputs.

7.5.14.2 Table D-10 summarizes the time periods that contribute to the GBAS SIS TTA and the range of achieved TTA that can be expected.

7.5.14.3 Figure D-13 illustrates the nominal case with no missed messages and Figure D-14 illustrates the effect of missed messages for GAST D below 200 ft. Above 200 ft, the situation is similar, but the aircraft has a longer missed message allocation, as described above.

7.5.14.3.1 Figure D-14 illustrates the effect on the SIS TTA due to missed messages (upper half) and VDB termination (lower half) using the example of GAST D requirements below 200 ft. The upper time-line shows just two messages being missed, but the third is received, so operations can continue, unless the third message is indicating a fault condition that results in an alert from the receiver. The lower time-line shows the effect of the VDB terminating. The aircraft receiver invalidates its outputs after three messages are missed. The SIS TTA combines the ground TTA and the missed message allocation (See Table D-8), but it is now displaced by the aircraft receiver processing time. Above 200 ft, the situation is similar, but the aircraft has a longer allocation, as described in RTCA DO-253D.

7.5.14.3.2 For SIS integrity, the diagram indicates that the SIS TTA starting point is where the fault-free airborne receiver outputs out-of-tolerance data. The SIS TTA end event is also at the output of the airborne receiver.

7.5.14.3.3 The start event of the ground subsystem's time-to-alert or time-to-detect and broadcast is the last bit of the first message (Type 1 and Type 11 message pair for GAST D) including the out-of-tolerance data. For ground equipment failures or termination of the VDB signal, this is the first message the ground subsystem broadcasts containing correction, integrity or path information that does not conform to the applicable integrity requirement (e.g. SIS integrity, ground subsystem integrity). For satellite failures, the requirements are out-of-tolerance once differential pseudo-range errors exceed the performance metrics detailed within a certain requirement (e.g. Ranging Source Monitoring). Their end event is the last bit of the first message (message pair for GAST D) removing the out-of-tolerance data or flagging it invalid.

7.5.14.3.4 It should be noted that, while the Figure D-13 indicates that the SIS and ground subsystem TTAs reference different start and end points in time, an ANSP may assume that they are the same. A ground subsystem should be evaluated and certified with no credit or penalty for airborne receiver variations due to a specific, approved aircraft implementation. From the ground subsystem perspective, all received messages are assumed to be instantaneously applied or acted upon by the airborne receiver. This effectively results in equivalent SIS and ground subsystem TTA reference points from the ground subsystem's point of view.

7.5.15 *Ground subsystem integrity risk for GAST D.* Appendix B, 3.6.7.1.2.1.1.3 specifies a new ground subsystem integrity requirement relating to fail-safe design criteria. This integrity method will ensure that failures within the ground subsystem that might affect the stations functions and result in erroneous information are extremely improbable. The intent of this requirement is to specify the allowable risk that the ground subsystem would internally generate and cause erroneous information to be broadcast. Other requirements specify the required performance of the ground subsystem with respect to detection and mitigation of faults originating outside the ground subsystem (such as ranging source failures). This requirement relates to the probability that the ground subsystem fails to meet the intended function. The intended function for GBAS is defined in Chapter 3, 3.7.3.5.2. The functions listed in that section and their associated performance requirements characterize the intended function of the system.

Table D-10. Contributions to signal-in-space time-to-alert

Integrity risk requirements and service types	*Ground subsystem TTA [Note 1]*	*Message time-out in aircraft [Note 5]*	*Signal-in-space TTA (nominal) [Note 6]*	*Signal-in-space TTA (maximum) [Note 7]*
App B, 3.6.7.1.2.1.1.1 and 3.6.7.1.2.2.1 (GAST A,B,C)	3.0 s *[Note 2]*	3.5 s	3.0 s	6.0 s
App B, 3.6.7.1.2.1.1.2 and 3.6.7.1.2.2.1 (GAST D)	3.0 s *[Notes 2 and 8]*	3.5 s (above 200 ft HAT) 1.5 s (below 200 ft HAT)	3.0 s 3.0 s	6.0 s 4.0 s
App. B, 3.6.7.1.2.1.1.3 (GAST D)	1.5 s	3.5 s (above 200 ft HAT) 1.5 s (below 200 ft HAT)	1.5 s 1.5 s	4.5 s *[Note 3]* 2.5 s *[Note 3]*
App. B, 3.6.7.3.3 (GAST D)	1.5 s *[Note 9]*	3.5 s (above 200 ft HAT) 1.5 s (below 200 ft HAT)	1.5 s 1.5 s	4.5 s *[Note 4]* 2.5 s *[Note 4]*

Note 1.— These ground subsystem TTA requirements apply to a ground subsystem transmitting Type 1 messages. Ground subsystems transmitting Type 101 messages have a 5.5 s TTA as standardized in Appendix B, 3.6.7.1.2.1.2.1.2.

Note 2.— These times apply to excluding all ranging sources, marking all ranging sources as invalid in message Type 1 or the cessation of VDB transmission. When a single ranging source is marked invalid or excluded, it may or may not cause the aircraft receiver to generate an alert, depending on the role of that ranging source in the aircraft's position solution.

Note 3.— This design requirement applies to the integrity of internal ground subsystem functions (excluding single reference receiver failures). This includes the ground subsystem ranging source monitoring capability. The table illustrates the exposure time for ground equipment failures that result in the transmission of non-compliant information and that are enunciated to the aircraft using the VDB transmission.

Note 4.— These requirements apply to the integrity monitoring for GNSS ranging sources. When a single ranging source is marked invalid or excluded, it may or may not cause the aircraft receiver to generate an alert, depending on the role of that ranging source in the aircraft's position solution. The times listed in the table assume the ranging source was critical to determining the position solution.

Note 5.— The missed message time-out allocation starts with the last received message and not with the first missed message, so is 0.5 s longer than time added to the SIS time-to-alert.

Note 6.— If transmissions continue and there are no missed messages, the "nominal" column is relevant. This value includes the maximum ground subsystem contribution.

Note 7.— The maximum SIS TTA includes the maximum ground subsystem contribution and the possible temporary loss of message reception. When VDB transmissions cease, the maximum SIS TTA is relevant. This time is computed by adding the ground subsystem TTA and the airborne message time out minus 0.5 s (see Note 5).

Note 8.— Although these sections are related to FAST D and the maximum TTA values are larger than those historically associated with Category II/III operations, the TTA values in this line are not relevant for integrity to support Category II/III. These TTA values apply to the bounding conditions (see 7.5.3.1) and therefore are related to the total risk of fault-free error sources and faults exceeding the protection levels. For GAST D, the effects of malfunctions are addressed by the additional requirements in Appendix B, 3.6.7.1.2.1.1.3, Appendix B, 3.6.7.3.3 and additional airborne requirements as provided in RTCA DO-253D, for example the reference receiver fault monitor. These additional requirements are more constraining and enforce a shorter TTA that is appropriate for Category II/III operations. The existence of the longer TTA values in this line should not be interpreted to imply that errors near or exceeding the alert limit for up to these longer exposure times can occur with a probability greater than 1 x 10-9 in any landing.

Note 9.— This is "time to detect and broadcast"; the other ground system requirements apply in addition.

7.5.15.1 *Verification of compliance with subsystem integrity risk for GAST D*. Verification that a ground subsystem meets the integrity risk requirements of Appendix B, 3.6.7.1.2.1.1.3 would typically be accomplished through a combination of analysis and appropriate safety-related design practices/processes. The overall process must ensure that failures within the ground subsystem that might affect the stations intended functions and result in erroneous information are extremely improbable. All ground subsystem component failure conditions must be shown to be sufficiently mitigated through either direct monitoring or through use of an acceptable design assurance development process (such as RTCA/DO-178 and RTCA/DO-254). The methodology should provide assurance of mitigation of component (HW, SW) failures. The integrity method of design assurance, applied in conjunction with fail-safe design concepts and other assurance actions (such as those in SAE ARP 4754) to detect and remove systematic errors in the design, provides safety assurance of the GAST D ground system. Some States have used safety assurance guidance from ICAO's *Safety Management Manual (SMM)* (Doc 9859).

7.6 Continuity of service

7.6.1 *GBAS continuity /integrity designator*. The GBAS continuity/integrity designator (GCID) provides an indication of the current capability of GBAS ground subsystems. The ground subsystem meets the performance and functional requirements of GAST A, B or C when GCID is set to 1. The ground subsystem meets the performance and functional requirements of GAST A, B, C and D when GCID is set to 2. GCID of 3 and 4 are intended to support future operations with an associated service type that has requirements that are more stringent than GAST D. The GCID is intended to be an indication of ground subsystem status to be used when an aircraft selects an approach. It is not intended to replace or supplement an instantaneous integrity indication communicated in a Type 1 or Type 101 message. GCID does not provide any indication of the ground subsystem capability to support the GBAS positioning service.

7.6.2 *Ground subsystem continuity of service*. GBAS ground subsystems are required to meet the continuity of service specified in Appendix B to Chapter 3, 3.6.7.1.3 in order to support GAST A, B and C. GBAS ground subsystems that are also intended to support other operations through the use of the GBAS positioning service should support the minimum continuity required for terminal area operations, which is $1–10^{-4}$/hour (Chapter 3, Table 3.7.2.4-1). When the GAST A, B or C required continuity ($1–8 \times 10^{-6}$/15 seconds) is converted to a per hour value it does not meet the $1–10^{-4}$/hour minimum continuity requirement. Therefore, additional measures are necessary to meet the continuity required for other operations. One method of showing compliance with this requirement is to assume that airborne implementation uses both GBAS and ABAS to provide redundancy and that ABAS provides sufficient accuracy for the intended operation.

7.6.2.1 *Ground subsystem continuity of service for GAST D*. A ground segment that supports GAST D must meet the SIS continuity requirement (1-8.0 × 10^{-6}/15 seconds) for a GAST A, B and C system but must also meet the continuity requirements specific to GAST D as defined in Appendix B, 3.6.7.1.3.2. The ground subsystem continuity is defined by two requirements. One is the continuity of the ground subsystem that includes failures of all components necessary for the VDB broadcast, including the reference receivers. It also includes loss of service due to integrity failures in the ground subsystem that result in alerts and monitor false alerts. The other allocation is the continuity associated with monitor fault-free detections. The reason for defining the ranging source monitor detections as a separate requirement is because the VDB broadcast portion includes all failures that result in the loss of the SIS, whereas the monitor contribution is related only to exclusion of individual satellites from the broadcast corrections. This does not necessarily result in a loss of the SIS by the airborne receiver. The requirement is defined on a per ranging source basis so that the ground design does not need to account for the actual number of satellites in view or the number considered critical to the user for a specific approach. It is the responsibility of the airborne user to demonstrate the overall continuity achieved when considering the contribution of the satellites and the airborne monitors.

7.7 GBAS channel selection

7.7.1 Channel numbers are used in GBAS to facilitate an interface between aircraft equipment and the signal-in-space that is consistent with interfaces for ILS and MLS. The cockpit integration and crew interface for GBAS may be based on entry of the 5-digit channel number. An interface based on approach selection through a flight management function similar to current practice with ILS is also possible. The GBAS channel number may be stored in an on-board navigation database as part of a named approach. The approach may be selected by name and the channel number can automatically be provided to the equipment that must select the appropriate GBAS approach data from the broadcast data. Similarly, the use of the GBAS positioning service may be based on the selection of a 5-digit channel number. This facilitates conducting operations other than the approaches defined by the FAS data. To facilitate frequency tuning, the GBAS channel numbers for neighbouring GBAS ground subsystems supporting positioning service may be provided in the Type 2 message additional data block 2.

7.7.2 A channel number in the range from 20 001 to 39 999 is assigned when the FAS data are broadcast in the Type 4 message. A channel number in the range from 40 000 to 99 999 is assigned when the FAS data associated with a GAST A service type are obtained from the on-board database.

7.7.3 Every FAS data block uplinked in a Type 4 message will be associated with a single 5-digit channel number regardless of whether or not the approach is supported by multiple approach service types. For approaches that are supported by multiple approach service types, the approach performance designator field in the Type 4 message is used to indicate the most demanding approach service type supported by the ground subsystem for any specific approach.

7.8 Reference path data selector and reference station data selector

A mapping scheme provides a unique assignment of a channel number to each GBAS approach. The channel number consists of five numeric characters in the range 20 001 to 39 999. The channel number enables the GBAS airborne subsystem to tune to the correct frequency and select the final approach segment (FAS) data block that defines the desired approach. The correct FAS data block is selected by the reference path data selector (RPDS), which is included as part of the FAS definition data in a Type 4 message. Table D-11 shows examples of the relationship between the channel number, frequency and RPDS. The same mapping scheme applies to selection of the positioning service through the reference station data selector (RSDS). The RSDS is broadcast in the Type 2 message and allows the selection of a unique GBAS ground subsystem that provides the positioning service. For GBAS ground subsystems that do not provide the positioning service and broadcast the additional ephemeris data, the RSDS is coded with a value of 255. All RPDS and RSDS broadcast by a ground subsystem must be unique on the broadcast frequency within radio range of the signal. The RSDS value must not be the same as any of the broadcast RPDS values.

7.9 Assignment of RPDS and RSDS by service provider

RPDS and RSDS assignments are to be controlled to avoid duplicate use of channel numbers within the protection region for the data broadcast frequency. Therefore, the GBAS service provider has to ensure that an RPDS and RSDS are assigned only once on a given frequency within radio range of a particular GBAS ground subsystem. Assignments of RPDS and RSDS are to be managed along with assignments of frequency and time slots for the VHF data broadcast.

Table D-11. Channel assignment examples

Channel number (N)	*Frequency in MHz (F)*	*Reference path data selector (RPDS) or Reference station data selector (RSDS)*
20 001	108.025	0
20 002	108.05	0
20 003	108.075	0
….	….	….
20 397	117.925	0
20 398	117.95	0
20 412 (Note)	108.025	1
20 413	108.05	1
….	….	….

Note.— Channels between 20 398 and 20 412 are not assignable because the channel algorithm maps them to frequencies outside the range of 108.025 MHz and 117.950 MHz. A similar "gap" in the channel assignments occurs at each RPDS transition.

7.10 GBAS identification

The GBAS identification (ID) is used to uniquely identify a GBAS ground subsystem broadcasting on a given frequency within the VDB coverage of the GBAS. The aircraft will navigate using data broadcast from one or more GBAS broadcast stations of a single GBAS ground subsystem (as identified by a common GBAS identification).

7.11 Final approach segment (FAS) path

7.11.1 FAS path is a line in space defined by the landing threshold point/fictitious threshold point (LTP/FTP), flight path alignment point (FPAP), threshold crossing height (TCH) and glide path angle (GPA). These parameters are determined from data provided in a FAS data block within a Type 4 message or in the on-board database. The relationship between these parameters and the FAS path is illustrated in Figure D-15.

7.11.1.1 FAS data blocks for SBAS and some GBAS approaches are held within a common onboard database supporting both SBAS and GBAS. States are responsible for providing the FAS data to support APV procedures when the Type 4 message is not broadcast. These data comprise the parameters contained within the FAS block, the RSDS, and associated broadcast frequency. The FAS block for a particular approach procedure is described in Appendix B, 3.6.4.5.1 and Table B-134.

7.11.2 *FAS path definition*

7.11.2.1 *Lateral orientation*. The LTP/FTP is typically at or near the runway threshold. However, to satisfy operational needs or physical constraints, the LTP/FTP may not be at the threshold. The FPAP is used in conjunction with the LTP/FTP to define the lateral reference plane for the approach. For a straight-in approach aligned with the runway, the FPAP will be at or beyond the stop end of the runway. The FPAP is not placed before the stop end of the runway.

7.11.2.2 *ΔLength offset*. The Δlength offset defines the distance from the end of the runway to the FPAP. This parameter is provided to enable the aircraft equipment to compute the distance to the end of the runway. If the Δlength offset is not set to appropriately indicate the end of the runway relative to the FPAP, the service provider should ensure the parameter is coded as "not provided".

7.11.2.3 *Vertical orientation*. Local vertical for the approach is defined as normal to the WGS-84 ellipsoid at the LTP/FTP and may differ significantly from the local gravity vector. The local level plane for the approach is defined as a plane perpendicular to the local vertical passing through the LTP/FTP (i.e. tangent to the ellipsoid at the LTP/FTP). The datum crossing point (DCP) is a point at a height defined by TCH above the LTP/FTP. The FAS path is defined as a line with an angle (defined by the GPA) relative to the local level plane passing through the DCP. The GPIP is the point where the final approach path intercepts the local level plane. The GPIP may actually be above or below the runway surface depending on the curvature of the runway.

7.11.3 *"ILS look-alike"* deviation computations. For compatibility with existing aircraft designs, it is desirable for aircraft equipment to output guidance information in the form of deviations relative to a desired flight path defined by the FAS path. The Type 4 message includes parameters that support the computation of deviations that are consistent with typical ILS installations.

7.11.3.1 *Lateral deviation definition*. Figure D-15 illustrates the relationship between the FPAP and the origin of the lateral angular deviations. The course width parameter and FPAP are used to define the origin and sensitivity of the lateral deviations. By adjusting the location of the FPAP and the value of the course width, the course width and sensitivity of a GBAS can be set to the desired values. They may be set to match the course width and sensitivity of an existing ILS or MLS. This may be necessary, for example, for compatibility with existing visual landing aids.

7.11.3.1.1 *Lateral deviation reference*. The lateral deviation reference plane is the plane that includes the LTP/FTP, FPAP and a vector normal to the WGS-84 ellipsoid at the LTP/FTP. The rectilinear lateral deviation is the distance of the computed aircraft position from the lateral deviation reference plane. The angular lateral deviation is a corresponding angular displacement referenced to the GNSS azimuth reference point (GARP). The GARP is defined to be beyond the FPAP along the procedure centre line by a fixed offset value of 305 m (1 000 ft).

7.11.3.1.2 *Lateral displacement sensitivity*. The lateral displacement sensitivity is determined by the aircraft equipment from the course width provided in the FAS data block. The service provider is responsible for setting the course width parameter to a value that results in the appropriate angle for full scale deflection (i.e. 0.155 DDM or 150 μA) taking into account any operational constraints.

7.11.3.2 *Vertical deviations*. Vertical deviations are computed by the aircraft equipment with respect to a GBAS elevation reference point (GERP). The GERP may be at the GPIP or laterally offset from the GPIP by a fixed GERP offset value of 150 m. Use of the offset GERP allows the glide path deviations to produce the same hyperbolic effects that are normal characteristics of ILS and MLS (below 200 ft). The decision to offset the GERP or not is made by the aircraft equipment in

accordance with requirements driven by compatibility with existing aircraft systems. Service providers should be aware that users may compute vertical deviations using a GERP which is placed at either location. Sensitivity of vertical deviations is set automatically in the aircraft equipment as a function of the GPA. The specified relationship between GPA and the full scale deflection (FSD) of the vertical deviation sensitivity is: FSD = 0.25*GPA. The value 0.25 is the same as for MLS (Attachment G, 7.4.1.2) and differs slightly from the nominal value of 0.24 recommended for ILS (Chapter 3, 3.1.5.6.2). However, the value specified is well within the tolerances recommended for ILS (0.2 to 0.28). Therefore the resulting sensitivity is equivalent to the glide path displacement sensitivity provided by a typical ILS.

7.11.4 *Approaches not aligned with the runway*. Some operations may require the definition of a FAS path that is not aligned with the runway centre line as illustrated in Figure D-16. For approaches not aligned with the runway, the LTP/FTP may or may not lie on the extended runway centre line. For this type of approach Δlength offset is not meaningful and should be set to "not provided".

7.11.5 *SBAS service provider*. A common format is used for FAS data blocks to be used by both GBAS and SBAS. The SBAS service provider ID field identifies which SBAS system(s) may be used by an aircraft that is using the FAS data during an approach. The GBAS service provider may inhibit use of the FAS data in conjunction with any SBAS service. For precision approaches based on GBAS this field is not used, and it can be ignored by aircraft GBAS equipment.

7.11.6 *Approach identifier*. The service provider is responsible for assigning the approach identifier for each approach. The approach identification should be unique within a large geographical area. Approach identifications for multiple runways at a given aerodrome should be chosen to reduce the potential for confusion and misidentification. The approach identification should appear on the published charts that describe the approach. The first letter of the approach identifier is used in the authentication protocols for GBAS. Ground stations that support the authentication protocols must encode the first character of the identifier for all approaches supported from the set of letters {A X Z J C V P T} as described in Appendix B, 3.6.7.4.1.4. This enables airborne equipment (that supports the authentication protocols) to determine which slots are assigned to the ground station and therefore to subsequently ignore reception of data broadcast in slots not assigned to the selected ground station. For ground stations that do not support the authentication protocols, the first character of the approach identifier may be assigned any character except those in the set {A X Z J C V P T}.

7.12 Airport siting considerations

7.12.1 The installation of a GBAS ground subsystem involves special considerations in choosing prospective sites for the reference receiver antennas and the VDB antenna(s). In planning antenna siting, Annex 14 obstacle limitation requirements must be met.

7.12.2 *Locating reference receiver antennas*. The site should be selected in an area free of obstructions, so as to permit the reception of satellite signals at elevation angles as low as possible. In general, anything masking GNSS satellites at elevation angles higher than 5 degrees will degrade system availability.

7.12.2.1 The antennas for the reference receivers should be designed and sited to limit multipath signals that interfere with the desired signal. Mounting antennas close to a ground plane reduces long-delay multipath resulting from reflections below the antenna. Mounting height should be sufficient to prevent the antenna being covered by snow, or being interfered with by maintenance personnel or ground traffic. The antenna should be sited so that any metal structures, such as air vents, pipes and other antennas are outside the near-field effects of the antenna.

7.12.2.2 Besides the magnitude of the multipath error at each reference receiver antenna location, the degree of correlation must also be considered. Reference receiver antennas should be located in places that provide independent multipath environments.

7.12.2.3 The installation of each antenna should include a mounting that will not flex in winds or under ice loads. Reference receiver antennas should be located in an area where access is controlled. Traffic may contribute to error due to multipath or obstruct view of satellites from the antennas.

7.12.3 *Locating the VDB transmitter antenna*. The VDB transmitter antenna must be located to comply with the minimum and maximum field strength requirements within the service volume(s) as defined in Chapter 3, 3.7.3.5.4.4. Compliance with the minimum field strength for approach services can generally be met if the VDB transmitter antenna is located so that an unobstructed line-of-sight exists from the antenna to any point within the service volume for each supported FAS. Consideration should also be given to ensuring the minimum VDB transmitter antenna-to-aircraft antenna separation so that the maximum field strength is not exceeded. For the nominal link budget, typically, an 80 m separation is required to avoid exceedance of the maximum field strength requirement. Though it is desirable to apply the separation criteria to any location where an aircraft may operate (including taxiways, ramp areas and gates), it is only necessary to meet the maximum field strength in the service volume(s) (see 3.7.3.5.3 for service volume definitions). If the minimum separation cannot be met for all operating aircraft (including taxiways, ramp areas and gates) it must be ensured that the airborne receiver is protected from burn-out in accordance with the RTCA/DO-253 D MOPS. This typically requires a minimum separation of 20 m from the VDB antenna to the aircraft antenna. In order to provide the required coverage for multiple FASs at a given airport, and in order to allow flexibility in VDB antenna siting, the actual coverage around the transmitter antenna may need to be considerably larger than that required for a single FAS. The ability to provide this coverage is dependent on the VDB antenna location with respect to the runway and the height of the VDB antenna. Generally speaking, increased antenna height may be needed to provide adequate signal strength to users at low altitudes, but may also result in unacceptable multipath nulls within the desired coverage. A suitable antenna height trade-off must be made based on analysis, to ensure the signal strength requirements are met within the entire coverage. Consideration should also be given to the effect of terrain features and buildings on the multipath environment.

7.12.3.1 In order to ensure that the maximum field strength requirements defined in Chapter 3, 3.7.3.5.4.4 are not violated, VDB transmitter antennas should not be located any closer than 80 m to where aircraft are approved to operate based on published procedures using GBAS or ILS guidance information. This applies to aircraft on final approach, departure, and on runways. The 80-metre separation applies to the slant range distance between VDB transmitter antennas and the aircraft antenna position. For aircraft on the runway the maximum deviation from the centre line can be assumed to be 19 m. In regions prior to runway thresholds, the maximum lateral course angular deviation from the extended centre line on final approach is plus and minus one sixth of the full course width, which is nominally 210 m (±105 m (±350 ft)) at threshold. The origin of the lateral course should be assumed to be the GBAS GARP, or the ILS localizer, as appropriate. The maximum vertical deviation is one half of the full scale deflection from the glide path, where full scale deflection is calculated as ±0.25 times the glide path angle. The origin of the glide path should be assumed to be the GPIP. See 7.11.3 for further guidance on lateral and vertical course width deviation sensitivity.

7.12.4 *Use of multiple transmit antennas to improve VDB coverage*. For some GBAS installations, constraints on antenna location, local terrain or obstacles may result in ground multipath and/or signal blockage that make it difficult to provide the specified field strength at all points within the service volume. Some GBAS ground facilities may make use of one or more additional antenna systems, sited to provide signal path diversity such that collectively they meet the service volume requirements.

7.12.4.1 Whenever multiple antenna systems are used, the antenna sequence and message scheduling must be arranged to provide broadcasts at all points within the service volume that adhere to the specified minimum and maximum data broadcast rates, considering the receiver's ability to adapt to transmission-to-transmission variations in signal strength in a given slot. Exceedance of the signal power variation requirement in Appendix B, 3.6.8.2.2.3 is acceptable for limited areas within the service volume, provided it can be shown based on receiver behaviour as described, for example in RTCA DO-253D and the assumptions listed below, that the resulting performance is acceptable.

7.12.4.1.2 Message transmission and reception rate requirements, and time-to-alert requirements prevent Type 1 and Type 11 messages from being alternated between antennas in the same slot from frame to frame. Only Type 2 and 4 messages (and Type 3 messages as a filler message) are candidates for being alternated. Continuity is maintained as long as a Type 2 message is received at least once per minute. The receiver does not verify repeated reception of Type 4 messages during the final stages of an approach.

7.12.4.1.3 While the signal power variation requirement in Appendix B, 3.6.8.2.2.3 applies on the input port of the receiver, the situation for a specific site has to be assessed in the field strength domain. Therefore, the potential variation in aircraft antenna gain must be taken into account. If the area where the signal power variation requirement may be exceeded is so large that it may take one minute or more for an approaching aircraft to pass through it, it may be necessary to address the potential message loss from a probabilistic point of view. In these cases the multiple VDB antenna set-up should be limited so that in case alternation of messages in the same slot from frame to frame is applied, the alternating pattern should only involve two transmitter antennas, with a scheduled burst in every frame, and the transmission should alternate between the antennas every frame, in order to resemble the situation for which the receiver has been tested. This is necessary in order to be able to make assumptions on receiver message failure rates (MFR).

7.12.4.1.4 When analysing the probability of lost messages, the following basic assumptions apply:

1. If all received signal levels are between the receiver minimum design input power (S_{min}) and maximum design input power (S_{max}), and they are within 40 dB of each other, then the analysis can assume 10^{-3} message failure rate (MFR).

2. If all received signals are below S_{min}, then the analysis must assume a MFR of 100 per cent.

3. If any signal exceeds S_{max} it must be assumed that reception in all slots in that frame and any number of subsequent frames is adversely affected (not only those where S_{max} is exceeded), as no receiver recovery time is specified for these conditions.

Furthermore, in the case of a dual antenna set-up with messages alternating in each frame, the following assumptions can be made:

4. If one signal is below S_{min} ($S_{min} - \Delta$) and the second signal is within 40 dB (i.e., $S_{min} - \Delta + 40$ dB or less), then the analysis must assume that the MFR for the signal below Smin is 100 per cent and the MFR for the stronger signal is 10^{-3}.

5. If both signals are within S_{min} to S_{max}, but the variation between the signals is greater than 40 dB, then the analysis must assume a MFR of 60 per cent.

6. If one signal is below S_{min} ($S_{min} - \Delta$) and the second is above S_{min}, and exceeds 40 dB variation ($S_{min} - \Delta + 40$ dB + ε or more), then the analysis must assume that the MFR for the signal below S_{min} is 100 per cent and the MFR for the stronger signal is 60 per cent.

7.12.4.1.5 The resulting probability of no Type 2 messages being received for a duration of one minute should be assessed against the applicable continuity requirement.

Note.— The analysis may have to consider up to 15 dB variation for the aircraft VDB antenna gain variation depending upon the scenario, such that the 40 dB power variation ≤ SIS power variation + up to 15 dB aircraft antenna gain variation.

To avoid receiver processing issues concerning lost or duplicated messages, all transmissions of the Type 1, Type 11 or Type 101 message, or linked pairs of Type 1, Type 11 or Type 101 messages for a given measurement type within a single frame need to provide identical data content.

7.12.4.2 One example of the use of multiple antennas is a facility with two antennas installed at the same location but at different heights above the ground plane. The heights of the antennas are chosen so that the pattern from one antenna fills the nulls in the pattern of the other antenna that result from reflections from the ground plane. The GBAS ground subsystem alternates broadcasts between the two antennas, using one, two or three assigned slots of each frame for each antenna. Type 1, Type 11 or Type 101 messages as appropriate for the service type supported are broadcast once per frame, per antenna. This allows for reception of one or two Type 1, Type 11 or Type 101 messages per frame, depending on whether the user is located within the null of one of the antenna patterns. Type 2 and 4 messages are broadcast from the first antenna in one frame, then from the second antenna in the next frame. This allows for reception of one each of the Type 2 and 4 messages per one or two frames, depending on the user location.

7.13 Definition of lateral and vertical alert limits

7.13.1 The lateral and vertical alert limits when the active service type is C or D are computed as defined in Appendix B, Tables B-138 and B-139. In these computations the parameters D and H have the meaning shown in Figure D-17.

7.13.2 The vertical alert limit when the active service type is C or D is scaled from a height of 60 m (200 ft) above the LTP/FTP. For a procedure designed with a decision height of more than 60 m (200 ft), the VAL at that decision height will be larger than the broadcast FASVAL.

7.13.3 The lateral and vertical alert limits for procedures supported by GAST A service type associated with channel numbers 40 001 to 99 999 are computed in the same manner as SBAS as given in 6.6.

7.14 Monitoring and maintenance actions

7.14.1 Specific monitoring requirements or built-in tests may be necessary in addition to the monitors defined in Appendix B, 3.6.7.3 and should be determined by individual States. Since the VDB signal is critical to the operation of the GBAS broadcast station, any failure of the VDB to successfully transmit a usable signal within the assigned slots and over the entire service volume is to be corrected as soon as possible. Therefore, it is recommended that the following conditions be used as a guide for implementing a VDB monitor:

a) *Power*. A significant drop in power is to be detected within an appropriate time period.

b) *Loss of message type*. The failure to transmit any scheduled message type(s). This could be based on the failure to transmit a unique message type in succession, or a combination of different message types.

c) *Loss of all message types*. The failure to transmit any message type for an appropriate time period will be detected.

The appropriate time periods for these monitors depend on the FAST and on whether a back-up transmitter is provided. Where a back-up transmitter is provided, the objective is to switch to the back-up transmitter quickly enough to avoid an alert being generated in the airborne equipment. This means that the appropriate time periods are a maximum of 3 seconds for FAST C and a maximum of 1.5 seconds for FAST D ground systems in order to be consistent with the aircraft equipment message loss requirements. If longer periods than this are implemented, the changeover to the back-up transmitter will cause an alert and must therefore be considered to be a continuity failure. If no back-up transmitter is provided, the time periods for these monitors are not critical.

7.14.2 Upon detection of a failure, and in the absence of a back-up transmitter, termination of the VDB service should be considered if the signal cannot be used reliably within the service volume to the extent that aircraft operations could be significantly impacted. Appropriate actions in operational procedures are to be considered to mitigate the event of the signal being removed from service. These would include dispatching maintenance specialists to service the GBAS VDB or special ATC procedures. Additionally, maintenance actions should be taken when possible for all built-in test failures to prevent loss of GBAS service.

7.14.3 The use of a back-up transmitter also applies to the VDB monitoring requirements defined in Appendix B, 3.6.7.3.1. The time to switch over to the back-up needs to be taken into account while remaining compliant with the time to detect and terminate transmissions defined in Appendix B, 3.6.7.3.1.1 and 3.6.7.3.1.2.

7.15 Examples of VDB messages

7.15.1 Examples of the coding of VDB messages are provided in Tables D-12 through D-19. The examples illustrate the coding of the various application parameters, including the cyclic redundancy check (CRC) and forward error correction (FEC) parameters, and the results of bit scrambling and D8PSK symbol coding. The engineering values for the message parameters in these tables illustrate the message coding process, but are not necessarily representative of realistic values.

7.15.2 Table D-12 provides an example of a Type 1 VDB message. The additional message flag field is coded to indicate that this is the first of two Type 1 messages to be broadcast within the same frame. This is done for illustration purposes; a second Type 1 message is not typically required, except to allow broadcast of more ranging source corrections than can be accommodated in a single message.

7.15.3 Table D-13 provides an example of a Type 101 VDB message. The additional message flag field is coded to indicate that this is the first of two Type 101 messages to be broadcast within the same frame. This is done for illustration purposes; a second Type 101 message is not typically required, except to allow broadcast of more ranging source corrections than can be accommodated in a single message.

7.15.4 Table D-14 provides examples of a Type 1 VDB message and a Type 2 VDB message coded within a single burst (i.e. two messages to be broadcast within a single transmission slot). The additional message flag field of the Type 1 message is coded to indicate that it is the second of two Type 1 messages to be broadcast within the same frame. The Type 2 message includes additional data block 1. Table D-15 provides an example of Type 1 and Type 2 messages with additional data blocks 1 and 2.

7.15.4.1 Table D-16 provides an example of Type 2 messages with additional data blocks 1, 3 and 4 coded within a single burst with a Type 3 message that is used to fill the rest of the time slot.

7.15.5 Table D-17 provides an example of a Type 4 message containing two FAS data blocks.

7.15.6 Table D-18 provides an example of a Type 5 message. In this example, source availability durations common to all approaches are provided for two ranging sources. Additionally, source availability durations for two individual approaches are provided: the first approach has two impacted ranging sources and the second approach has one impacted ranging source.

7.15.7 Table D-19 provides an example of a Type 11 message.

7.16 GBAS survey accuracy

The standards for the survey accuracy for NAVAIDs are contained in Annex 14 — *Aerodromes. In addition, the Manual of the World Geodetic System 1984 (WGS-84)* (Doc 9674) provides guidance on the establishment of a network of survey control stations at each aerodrome and how to use the network to establish WGS-84 coordinates. Until specific requirements are developed for GBAS, the Annex 14 survey accuracy requirements for NAVAIDs located at the aerodrome apply to GBAS. The recommendation contained in Appendix B to Chapter 3, 3.6.7.2.3.4, for the survey accuracy of the GBAS reference point is intended to further reduce the error in the WGS-84 position calculated by an airborne user of the GBAS positioning service to a value smaller than that established by the requirements of Appendix B to Chapter 3, 3.6.7.2.4.1 and 3.6.7.2.4.2, in the GBAS standards and to enhance survey accuracy compared to that specified in Annex 14. The integrity of all aeronautical data used for GBAS is to be consistent with the integrity requirements in Chapter 3, Table 3.7.2.4-1.

7.17 Type 2 message additional data blocks

7.17.1 The Type 2 message contains data related to the GBAS facility such as the GBAS reference point location, the GBAS continuity and integrity designator (GCID) and other pertinent configuration information. A method for adding new data to the Type 2 message has been devised to allow GBAS to evolve to support additional service types. The method is

through the definition of new additional data blocks that are appended to the Type 2 message. In the future, more additional data blocks may be defined. Data blocks 2 through 255 have variable length and may be appended to the message after additional data block 1 in any order.

7.17.2 Type 2 message additional data block 1 contains information related to spatial decorrelation of errors and information needed to support selection of the GBAS positioning service (when provided by a given ground station).

7.17.3 Type 2 message additional data block 2 data may be used in GRAS to enable the GRAS airborne subsystem to switch between GBAS broadcast stations, particularly if the GBAS broadcast stations utilize different frequencies. Additional data block 2 identifies the channel numbers and locations of the GBAS broadcast station currently being received and other adjacent or nearby GBAS broadcast stations.

7.17.4 Type 2 message additional data block 3 contains information necessary to support GAST D. All FAST D ground subsystems are required to transmit a Type 2 message with additional data block 3 properly populated so that the bounding requirements are met.

7.17.5 Type 2 message additional data block 4 contains information necessary for a ground station that supports the authentication protocols. It includes a single parameter which indicates which slots are assigned to the ground station for VDB transmissions. Airborne equipment that supports the authentication protocols will not use data unless it is transmitted in the slots indicated by the slot group definition field in the MT 2 ADB 4.

Table D-12. Example of a Type 1 VDB message

DATA CONTENT DESCRIPTION	*BITS USED*	*RANGE OF VALUES*	*RESOLUTION*	*VALUES*	*BINARY REPRESENTATION (NOTE 1)*
BURST DATA CONTENT					
Power ramp-up and settling	15				000 0000 0000 0000
Synchronization and ambiguity resolution	48				0100 0111 1101 1111 1000 1100 0111 0110 0000 0111 1001 0000
SCRAMBLED DATA					
Station slot identifier (SSID)	3	—	—	E	100
Transmission length (bits)	17	0 to 1 824 bits	1 bit	536	000 0000 1000 0110 00
Training sequence FEC	5	—	—	—	0000 1
APPLICATION DATA MESSAGE BLOCK					
Message Block (Type 1 message)					
Message Block Header					
Message block identifier	8	—	—	Normal	1010 1010
GBAS ID	24	—	—	BELL	0000 1000 0101 0011 0000 1100
Message type identifier	8	1 to 8	1	1	0000 0001
Message length	8	10 to 222 bytes	1 byte	61	0011 1101
Message (Type 1 example)					
Modified Z-count	14	0 to 1 199.9 s	0.1 s	100 s	00 0011 1110 1000
Additional message flag	2	0 to 3	1	1st of pair	01
Number of measurements	5	0 to 18	1	4	0 0100
Measurement type	3	0 to 7	1	C/A L1	000
Ephemeris Decorrelation	8	0 to 1.275	5×10^{-6}m/m	1×10^{-4}	0001 0100

DATA CONTENT DESCRIPTION	*BITS USED*	*RANGE OF VALUES*	*RESOLUTION*	*VALUES*	*BINARY REPRESENTATION (NOTE 1)*
Parameter (P)		$\times 10^{-3}$m/m			
Ephemeris CRC	16	—	—	—	0000 0000 0000 0000
Source availability duration	8	0 to 2 540 s	10 s	Not provided	1111 1111
Measurement Block 1					
Ranging source ID	8	1 to 255	1	2	0000 0010
Issue of data (IOD)	8	0 to 255	1	255	1111 1111
Pseudo-range correction (PRC)	16	±327.67 m	0.01 m	+1.0 m	0000 0000 0110 0100
Range rate correction (RRC)	16	±32.767 m	0.001 m/s	–0.2 m/s	1111 1111 0011 1000
σ_{pr_gnd}	8	0 to 5.08 m	0.02 m	0.98 m	0011 0001
B_1	8	±6.35 m	0.05 m	+0.10 m	0000 0010
B_2	8	±6.35 m	0.05 m	+0.15 m	0000 0011
B_3	8	±6.35 m	0.05 m	–0.25 m	1111 1011
B_4	8	±6.35 m	0.05 m	Not used	1000 0000
Measurement Block 2					
Ranging source ID	8	1 to 255	1	4	0000 0100
Issue of data (IOD)	8	0 to 255	1	126	0111 1110
Pseudo-range correction (PRC)	16	±327.67 m	0.01 m	–1.0 m	1111 1111 1001 1100
Range rate correction (RRC)	16	±32.767 m	0.001 m/s	+0.2 m/s	0000 0000 1100 1000
σ_{pr_gnd}	8	0 to 5.08 m	0.02 m	0.34 m	0001 0001
B_1	8	±6.35 m	0.05 m	+0.20 m	0000 0100
B_2	8	±6.35 m	0.05 m	+0.30 m	0000 0110
B_3	8	±6.35 m	0.05 m	–0.50 m	1111 0110
B_4	8	±6.35 m	0.05 m	Not used	1000 0000
Measurement Block 3					
Ranging source ID	8	1 to 255	1	12	0000 1100
Issue of data (IOD)	8	0 to 255	1	222	1101 1110
Pseudo-range correction (PRC)	16	±327.67 m	0.01 m	+1.11 m	0000 0000 0110 1111
Range rate correction (RRC)	16	±32.767 m	0.001 m/s	–0.2 m/s	1111 1111 0011 1000
σ_{pr_gnd}	8	0 to 5.08 m	0.02 m	1.02 m	0011 0011
B_1	8	±6.35 m	0.05 m	+0.10 m	0000 0010
B_2	8	±6.35 m	0.05 m	+0.25 m	0000 0101
B_3	8	±6.35 m	0.05 m	–0.25 m	1111 1011
B_4	8	±6.35 m	0.05 m	Not used	1000 0000
Measurement Block 4					
Ranging source ID	8	1 to 255	1	23	0001 0111
Issue of data (IOD)	8	0 to 255	1	80	0101 0000
Pseudo-range correction (PRC)	16	±327.67 m	0.01 m	–2.41 m	1111 1111 0000 1111
Range rate correction (RRC)	16	±32.767 m	0.001 m/s	–0.96 m/s	1111 1100 0100 0000
σ_{pr_gnd}	8	0 to 5.08 m	0.02 m	0.16 m	0000 1000

DATA CONTENT DESCRIPTION	*BITS USED*	*RANGE OF VALUES*	*RESOLUTION*	*VALUES*	*BINARY REPRESENTATION (NOTE 1)*
B_1	8	±6.35 m	0.05 m	+0.20 m	0000 0100
B_2	8	±6.35 m	0.05 m	+0.30 m	0000 0110
B_3	8	±6.35 m	0.05 m	–0.50 m	1111 0110
B_4	8	±6.35 m	0.05 m	Not used	1000 0000
Message Block CRC	32	—	—	—	1100 0010 1111 0011 0000 1011 1100 1010
APPLICATION FEC	48	—	—	—	0110 0011 1110 1001 1110 0000 1110 1101 0010 1001 0111 0101
Input to the bit scrambling (Note 2)	0 46 10 10 55 30 CA 10 80 BC 17 C2 20 28 00 00 FF 40 FF 26 00 1C FF 8C 40 C0 DF 01 20 7E 39 FF 13 00 88 20 60 6F 01 30 7B F6 00 1C FF CC 40 A0 DF 01 E8 0A F0 FF 02 3F 10 20 60 6F 01 53 D0 CF 43 AE 94 B7 07 97 C6				
Output from the bit scrambling (Note 3)	0 60 27 98 1F 2F D2 3B 5F 26 C2 1B 12 F4 46 D0 09 81 B6 25 1C 18 D0 7C 2A 7F B9 55 A8 B0 27 17 3A 60 EB 5F 1B 3B A5 FE 0A E1 43 D7 FA D7 B3 7A 65 D8 4E D7 79 D2 E1 AD 95 E6 6D 67 12 B3 EA 4F 1A 51 B6 1C 81 F2 31				
Fill bits	0 to 2	—	—	0	
Power ramp-down	9	—	—	—	000 000 000
D8PSK Symbols (Note 4)	00000035 11204546 31650100 12707716 71645524 74035772 26234621 45311123 22460075 52232477 16617052 04750422 07724363 40733535 05120746 45741125 22545252 73171513 51047466 13171745 10622642 17157064 67345046 36541025 07135576 55745512 222				

Notes.—

1. *The rightmost bit is the LSB of the binary parameter value and is the first bit transmitted or sent to the bit scrambler. All data fields are sent in the order specified in the table.*
2. *This field is coded in hexadecimal with the first bit to be sent to the bit scrambler as its MSB. The first character represents a single bit.*
3. *In this example fill bits are not scrambled.*
4. *This field represents the phase, in units of π/4 (e.g. a value of 5 represents a phase of 5 π/4 radians), relative to the phase of the first symbol.*

Table D-13. Example of a Type 101 VDB message

DATA CONTENT DESCRIPTION	*BITS USED*	*RANGE OF VALUES*	*RESOLUTION*	*VALUES*	*BINARY REPRESENTATION (NOTE 1)*
BURST DATA CONTENT					
Power ramp-up and settling	15				000 0000 0000 0000
Synchronization and ambiguity resolution	48				0100 0111 1101 1111 1000 1100 0111 0110 0000 0111 1001 0000
SCRAMBLED DATA					
Station slot identifier (SSID)	3			E	100
Transmission length (bits)	17	0 to 1824 bits	1 bit	416	00000000110100000
Training sequence FEC	5				11011
APPLICATION DATA MESSAGE BLOCK					
Message Block (Type 101 message)					
Message Block Header					
Message block identifier	8			Normal	1010 1010
GBAS ID	24			ERWN	00010101 00100101 11001110
Message type identifier	8	1 to 8101	1	101	0110 0101

DATA CONTENT DESCRIPTION	*BITS USED*	*RANGE OF VALUES*	*RESOLUTION*	*VALUES*	*BINARY REPRESENTATION (NOTE 1)*
Message length	8	10 to 222 bytes	1 byte	46	0010 1110
Message (Type 101 example)					
Modified Z-count	14	0 to 1199.9 s	0.1 s	100 s	00 0011 1110 1000
Additional message flag	2	0 to 3	1	1st of pair	01
Number of measurements	5	0 to 18	1	4	0 0100
Measurement type	3	0 to 7	1	C/A L1	000
Ephemeris Decorrelation Parameter (P)	8	0 to 1.275 × 10^{-3}m/m	5 × 10^{-6}m/m	0.115 × 10^{-3}m/m	0001 0111
Ephemeris CRC	16			0	0000 0000 0000 0000
Source availability duration	8	0 to 2540 s	10 s	Not provided	1111 1111
Number of B parameters	1	0 to 1	1	0	0
Spare	7			0	000 0000
Measurement Block 1					
Ranging source ID	8	1 to 255	1	2	0000 0010
Issue of data (IOD)	8	0 to 255	1	255	1111 1111
Pseudo-range correction (PRC)	16	±327.67 m	0.01 m	+3.56 m	0000 0001 0110 0100
Range rate correction (RRC)	16	±32.767 m/s	0.001 m/s	-0.011 m/s	1111 1111 1111 0101
σ_{pr_gnd}	8	0 to 50.8 m	0.2 m	9.8 m	0011 0001
Measurement Block 2					
Ranging source ID	8	1 to 255	1	4	0000 0100
Issue of data (IOD)	8	0 to 255	1	126	0111 1110
Pseudo-range correction (PRC)	16	±327.67 m	0.01 m	-1.0 m	1111 1111 1001 1100
Range rate correction (RRC)	16	±32.767 m/s	0.001 m/s	+0.002 m/s	0000 0000 0000 0010
σ_{pr_gnd}	8	0 to 50.8 m	0.2 m	3.4 m	0001 0001
Measurement Block 3					
Ranging source ID	8	1 to 255	1	12	0000 1100
Issue of data (IOD)	8	0 to 255	1	222	1101 1110
Pseudo-range correction (PRC)	16	±327.67 m	0.01 m	+4.11 m	0000 0001 1001 1011
Range rate correction (RRC)	16	±32.767 m/s	0.001 m/s	-0.029 m/s	1111 1111 1110 0011
σ_{pr_gnd}	8	0 to 50.8 m	0.2 m	10.2 m	0011 0011
Measurement Block 4					
Ranging source ID	8	1 to 255	1	23	0001 0111
Issue of data (IOD)	8	0 to 255	1	80	0101 0000

DATA CONTENT DESCRIPTION	*BITS USED*	*RANGE OF VALUES*	*RESOLUTION*	*VALUES*	*BINARY REPRESENTATION (NOTE 1)*
Pseudo-range correction (PRC)	16	±327.67 m	0.01 m	-2.41 m	1111 1111 0000 1111
Range rate correction (RRC)	16	±32.767 m/s	0.001 m/s	-0.096 m/s	1111 1111 1010 0000
σ_{pr_gnd}	8	0 to 50.8 m	0.2 m	1.6 m	0000 1000
Message Block CRC	32				1000 1000 1001 1111 0111 1000 0000 0100
APPLICATION FEC	48				1100 1100 1110 0110 1111 0110 1100 1110 1101 0110 0110 0010
Input to the bit scrambling (Note 2)	0 41 60 1B 55 73 A4 A8 A6 74 17 C2 20 E8 00 00 FF 00 40 FF 26 80 AF FF 8C 20 7E 39 FF 40 00 88 30 7B D9 80 C7 FF CC E8 0A F0 FF 05 FF 10 20 1E F9 11 46 6B 73 6F 67 33				
Output from the bit scrambling (Note 3)	0 67 57 93 1F 6C BC 83 79 EE C2 1B 12 34 46 D0 09 C1 09 FC 3A 84 80 0F E6 9F 18 6D 77 8E 1E 60 19 1B BA FF BC AB 68 26 7B E7 BC CE FA 0B D3 C4 43 C8 E0 B6 FA 42 84 A1				
Fill bits	0 to 2			0	
Power ramp-down	9				000 000 000
D8PSK Symbols (Note 4)	00000035 11204546 31650105 06345463 57026113 51374661 15123376 12066670 44776307 04225000 02735027 73373152 13230100 04706272 74137202 47724524 12715704 15442724 01101677 44571303 66447212 222				

Notes.—

1. *The rightmost bit is the LSB of the binary parameter value and is the first bit transmitted or sent to the bit scrambler. All data fields are sent in the order specified in the table.*
2. *This field is coded in hexadecimal with the first bit to be sent to the bit scrambler as its MSB. The first character represents a single bit.*
3. *In this example, fill bits are not scrambled.*
4. *This field represents the phase, in units of π/4 (e.g. a value of 5 represents a phase of 5π/4 radians), relative to the phase of the first symbol.*

Table D-14. Example of Type 1 and Type 2 VDB messages in a single burst

DATA CONTENT DESCRIPTION	*BITS USED*	*RANGE OF VALUES*	*RESOLUTION*	*VALUES*	*BINARY REPRESENTATION (NOTE 1)*
BURST DATA CONTENT					
Power ramp-up and settling	15				000 0000 0000 0000
Synchronization and ambiguity resolution	48				0100 0111 1101 1111 1000 1100 0111 0110 0000 0111 1001 0000
SCRAMBLED DATA					
Station slot identifier (SSID)	3	—	—	E	10 0
Transmission length (bits)	17	0 to 1 824 bits	1 bit	544	000 0000 1000 1000 00
Training sequence FEC	5	—	—	—	0000 0
APPLICATION DATA					
Message Block 1 (Type 1 message)					
Message Block Header					
Message block identifier	8	—	—	Normal	1010 1010
GBAS ID	24	—	—	BELL	0000 1000 0101 0011 0000 1100
Message type identifier	8	1 to 8	1	1	0000 0001
Message length	8	10 to 222 bytes	1 byte	28	0001 1100
Message (Type 1 example)					

DATA CONTENT DESCRIPTION	*BITS USED*	*RANGE OF VALUES*	*RESOLUTION*	*VALUES*	*BINARY REPRESENTATION (NOTE 1)*
Modified Z-count	14	0 to 1 199.9 s	0.1 s	100 s	00 0011 1110 1000
Additional message flag	2	0 to 3	1	2nd of pair	11
Number of measurements	5	0 to 18	1	1	0 0001
Measurement type	3	0 to 7	1	C/A L1	000
Ephemeris Decorrelation Parameter (P)	8	0 to 1.275×10^{-3} m/m	5×10^{-6} m/m	0 (SBAS)	0000 0000
Ephemeris CRC	16	—	—	0	0000 0000 0000 0000
Source availability duration	8	0 to 2 540 s	10 s	Not provided	1111 1111
Measurement Block 1					
Ranging source ID	8	1 to 255	1	122	0111 1010
Issue of data (IOD)	8	0 to 255	1	2	0000 0010
Pseudo-range correction (PRC)	16	±327.67 m	0.01 m	+1.0 m	0000 0000 0110 0100
Range rate correction (RRC)	16	±32.767 m	0.001 m/s	–0.2 m/s	1111 1111 0011 1000
σ_{pr_gnd}	8	0 to 5.08 m	0.02 m	1.96 m	0110 0010
B_1	8	±6.35 m	0.05 m	+0.10 m	0000 0010
B_2	8	±6.35 m	0.05 m	+0.15 m	0000 0011
B_3	8	±6.35 m	0.05 m	–0.25 m	1111 1011
B_4	8	±6.35 m	0.05 m	Not used	1000 0000
Message Block 1 CRC	32	—	—	—	1011 0101 1101 0000 1011 1100 0101 0010
Message Block 2 (Type 2 message)					
Message Block Header					
Message block identifier	8	—	—	Normal	1010 1010
GBAS ID	24	—	—	BELL	0000 1000 0101 0011 0000 1100
Message type identifier	8	1 to 8	1	2	0000 0010
Message length	8	10 to 222 bytes	1 byte	34	0010 0010
Message (Type 2 example)					
GBAS reference receivers	2	2 to 4	1	3	01
Ground accuracy designator letter	2	—	—	B	01
Spare	1	—	—	0	0
GBAS continuity/integrity designator	3	0 to 7	1	1	001
Local magnetic variation	11	±180°	0.25°	58° E	000 1110 1000
Spare	5	—	—	0	0000 0
$\sigma_{vert\_iono\_gradient}$	8	0 to 25.5×10^{-6} m/m	0.1×10^{-6} m/m	0	0000 0000
Refractivity index	8	16 to 781	3	379	1111 1001
Scale height	8	0 to 25 500 m	100 m	100 m	0000 0001
Refractivity uncertainty	8	0 to 255	1	20	0001 0100
Latitude	32	±90.0°	0.0005 arcsec	45°40’32’’ N	0001 0011 1001 1010 0001 0001 0000 0000
Longitude	32	±180.0°	0.0005 arcsec	93°25’13’’W	1101 0111 1110 1000 1000 1010 1011 0000
Ellipsoid height	24	±83 886.07 m	0.01 m	892.55 m	0000 0001 0101 1100 1010 0111

DATA CONTENT DESCRIPTION	*BITS USED*	*RANGE OF VALUES*	*RESOLUTION*	*VALUES*	*BINARY REPRESENTATION (NOTE 1)*
Additional Data Block 1					
Reference Station Data Selector	8	0 to 48	1	5	0000 0101
Maximum Use Distance (D_{max})	8	2 to 510 km	2 km	50 km	0001 1001
$K_{md\_e\_POS,GPS}$	8	0 to 12.75	0.05	6	0111 1000
$K_{md\_e,GPS}$	8	0 to 12.75	0.05	5	0110 0100
$K_{md\_e\_POS,GLONASS}$	8	0 to 12.75	0.05	0	0000 0000
$K_{md\_e,GLONASS}$	8	0 to 12.75	0.05	0	0000 0000
Message Block 2 CRC	32	—	—	—	0101 1101 0111 0110 0010 0011 0001 1110
Application FEC	48				1110 1000 0100 0101 0011 1011 0011 1011 0100 0001 0101 0010
Input to the bit scrambling (Note 2)	0 41 10 00 55 30 CA 10 80 38 17 C3 80 00 00 00 FF 5E 40 26 00 1C FF 46 40 C0 DF 01 4A 3D 0B AD 55 30 CA 10 40 44 A4 17 00 00 9F 80 28 00 88 59 C8 0D 51 17 EB E5 3A 80 A0 98 1E 26 00 00 78 C4 6E BA 4A 82 DC DC A2 17				
Output from the bit scrambling (Note 3)	0 67 27 88 1F 2F D2 3B 5F A2 C2 1A B2 DC 46 D0 09 9F 09 25 1C 18 D0 B6 2A 7F B9 55 C2 F3 15 45 7C 50 A9 6F 3B 10 00 D9 71 17 DC 4B 2D 1B 7B 83 72 D4 F7 CA 62 C8 D9 12 25 5E 13 2E 13 E0 42 44 37 45 68 29 5A B9 55 65				
Fill bits	0 to 2	—	—	1	0
Power ramp-down	9	—	—	—	000 000 000
D8PSK Symbols (Note 4)	00000035 11204546 31650105 67443352 35201160 30501336 62023576 12066670 74007653 30010255 31031274 26172772 76236442 41177201 35131033 33421734 42751235 60342057 66270254 17431214 03421036 70316613 46567433 66547730 34732201 40607506 014444				

Notes.—

1. *The rightmost bit is the LSB of the binary parameter value and is the first bit transmitted or sent to the bit scrambler. All data fields are sent in the order specified in the table.*
2. *This field is coded in hexadecimal with the first bit to be sent to the bit scrambler as its MSB. The first character represents a single bit.*
3. *In this example fill bits are not scrambled.*
4. *This field represents the phase, in units of π/4 (e.g. a value of 5 represents a phase of 5 π/4 radians), relative to the phase of the first symbol.*

Table D-15. Example of Type 1 and Type 2 VDB messages with additional data blocks 1 and 2

DATA CONTENT DESCRIPTION	*BITS USED*	*RANGE OF VALUES*	*RESOLUTION*	*VALUES*	*BINARY REPRESENTATION (NOTE 1)*
BURST DATA CONTENT					
Power ramp-up and settling	15				000 0000 0000 0000
Synchronization and ambiguity resolution	48				0100 0111 1101 1111 1000 1100 0111 0110 0000 0111 1001 0000
SCRAMBLED DATA					
Station slot identifier (SSID)	3			E	100
Transmission length (bits)	17	0 to 1824 bits	1 bit	592	00000001001010000
Training sequence FEC	5				10110
APPLICATION DATA					
Message Block 1 (Type 1 message)					
Message Block Header					
Message block identifier	8			Normal	1010 1010
GBAS ID	24			ERWN	00010101 00100101 11001110

DATA CONTENT DESCRIPTION	*BITS USED*	*RANGE OF VALUES*	*RESOLUTION*	*VALUES*	*BINARY REPRESENTATION (NOTE 1)*
Message type identifier	8	1 to 8	1	1	0000 0001
Message length	8	10 to 222 bytes	1 byte	28	0001 1100
Message (Type 1 example)					
Modified Z-count	14	0 to 1199.9 s	0.1 s	100 s	00 0011 1110 1000
Additional message flag	2	0 to 3	1	2nd of pair	11
Number of measurements	5	0 to 18	1	1	0 0001
Measurement type	3	0 to 7	1	C/A L1	000
Ephemeris Decorrelation Parameter (P)	8	0 to 1.275×10^{-3} m/m	5×10^{-6} m/m	0 (SBAS)	0000 0000
Ephemeris CRC	16			0	0000 0000 0000 0000
Source availability duration	8	0 to 2540 s	10 s	Not provided	1111 1111
Measurement Block 1					
Ranging source ID	8	1 to 255	1	122	0111 1010
Issue of data (IOD)	8	0 to 255	1	2	0000 0010
Pseudo-range correction (PRC)	16	±327.67 m	0.01 m	+2.09 m	0000 0000 1101 0001
Range rate correction (RRC)	16	±32.767 m/s	0.001 m/s	-0.2 m/s	1111 1111 0011 1000
σ_{pr_gnd}	8	0 to 5.08 m	0.02 m	1.96 m	0110 0010
B1	8	±6.35 m	0.05 m	+0.10 m	0000 0010
B2	8	±6.35 m	0.05 m	+0.15 m	0000 0011
B3	8	±6.35 m	0.05 m	–0.25 m	1111 1011
B4	8	±6.35 m	0.05 m	Not used	1000 0000
Message Block 1 CRC	32				00110010 10100100 11001011 00110000
Message Block 2 (Type 2 message)					
Message Block Header					
Message block identifier	8			Normal	1010 1010
GBAS ID	24			ERWN	00010101 00100101 11001110
Message type identifier	8	1 to 8	1	2	0000 0010
Message length	8	10 to 222 bytes	1 byte	40	0010 1000
Message (Type 2 example)					
GBAS reference receivers	2	2 to 4	1	3	01
Ground accuracy designator letter	2			B	01
Spare	1			0	0
GBAS continuity/integrity designator	3	0 to 7	1	1	001
Local magnetic variation	11	±180°	0.25°	58° E	000 1110 1000
Spare	5			0	0000 0
$\sigma_{vert\_iono\_gradient}$	8	0 to 25.5×10^{-6}m/m	0.1×10^{-6}m/m	0	0000 0000
Refractivity index	8	16 to 781	3	379	1111 1001
Scale height	8	0 to 25 500 m	100 m	100 m	0000 0001

DATA CONTENT DESCRIPTION	*BITS USED*	*RANGE OF VALUES*	*RESOLUTION*	*VALUES*	*BINARY REPRESENTATION (NOTE 1)*
Refractivity uncertainty	8	0 to 255	1	20	0001 0100
Latitude	32	±90.0°	0.0005 arcsec	45°40’32” N	0001 0011 1001 1010 0001 0001 0000 0000
Longitude	32	±180.0°	0.0005 arcsec	93°25’13” W	1101 0111 1110 1000 1000 1010 1011 0000
Ellipsoid height	24	±83 886.07 m	0.01 m	892.55 m	0000 0001 0101 1100 1010 0111
Additional Data Block 1					
Reference Station Data Selector	8	0 to 48	1	5	0000 0101
Maximum Use Distance (Dmax)	8	2 to 510 km	2 km	50 km	0001 1001
$K_{md\_e\_POS,GPS}$	8	0 to 12.75	0.05	6	0111 1000
$K_{md\_e,GPS}$	8	0 to 12.75	0.05	5	0110 0100
$K_{md\_e\_POS,GLONASS}$	8	0 to 12.75	0.05	0	0000 0000
$K_{md\_e,GLONASS}$	8	0 to 12.75	0.05	0	0000 0000
Additional Data Blocks					
Additional Data Block Length	8	2 to 255	1	6	0000 0110
Additional Data Block Number	8	2 to 255	1	2	0000 0010
Additional Data Block 2					
Channel Number	16	20001 to 39999	1	25001	0110 0001 1010 1001
ΔLatitude	8	±25.4°	0.2°	5.2	0001 1010
ΔLongitude	8	±25.4°	0.2°	–3.4	1110 1111
Message Block 2 CRC	32				11100000 01110010 00011101 00100100
Application FEC	48				1110 0010 0101 1100 0000 1111 1010 1011 0011 0100 0100 0000
Input to the bit scrambling (Note 2)		0 42 90 0D 55 73 A4 A8 80 38 17 C3 80 00 00 00 FF 5E 40 8B 00 1C FF 46 40 C0 DF 01 0C D3 25 4C 55 73 A4 A8 40 14 A4 17 00 00 9F 80 28 00 88 59 C8 0D 51 17 EB E5 3A 80 A0 98 1E 26 00 00 60 40 95 86 58 F7 24 B8 4E 07 02 2C D5 F0 3A 47			
Output from the bit scrambling (Note 3)		0 64 A7 85 1F 6C BC 83 5F A2 C2 1A B2 DC 46 D0 09 9F 09 88 1C 18 D0 B6 2A 7F B9 55 84 1D 3B A4 7C 13 C7 D7 3B 40 00 D9 71 17 DC 4B 2D 1B 7B 83 72 D4 F7 CA 62 C8 D9 12 25 5E 13 2E 13 E0 5A C0 CC 79 7A 5C A2 DD B9 75 B6 95 64 52 78 3F			
Fill bits	0 to 2			1	0
Power ramp-down	9				000 000 000
D8PSK Symbols (Note 4)		00000035 11204546 31650107 56336574 60137224 74145772 26467132 56422234 30443700 05565722 06506741 73647332 27242654 63345227 31575333 33421734 42751235 60342057 66270254 17431214 03421036 70316613 46567433 62077121 37275607 55315167 17135031 34423411 274444			

Notes.—

1. *The rightmost bit is the LSB of the binary parameter value and is the first bit transmitted or sent to the bit scrambler. All data fields are sent in the order specified in the table.*
2. *This field is coded in hexadecimal with the first bit to be sent to the bit scrambler as its MSB. The first character represents a single bit.*
3. *In this example, fill bits are not scrambled.*
4. *This field represents the phase, in units of π/4 (e.g. a value of 5 represents a phase of 5π/4 radians), relative to the phase of the first symbol.*

Table D-16. Example of a Type 2 message containing data blocks 1, 3 and 4 and a Type 3 message to fill the remainder of the slot

DATA CONTENT DESCRIPTION	*BITS USED*	*RANGE OF VALUES*	*RESOLUTION*	*VALUES*	*BINARY REPRESENTATION (NOTE 1)*
BURST DATA CONTENT					
Power ramp-up and settling	15	—	—	—	000 0000 0000 0000
Synchronization and ambiguity resolution	48	—	—	—	0100 0111 1101 1111 1000 1100 0111 0110 0000 0111 1001 0000
SCRAMBLED DATA					
Station slot identifier	3	—	—	E	100
Transmission length	17	0 to 1824 bits	1 bit	1704	0 0000 0110 1010 1000
Training sequence FEC	5	—	—	—	01000
APPLICATION DATA					
Message Block 1 (Type 2 message)					
Message Block Header					
Message block identifier	8	—	—	Normal	1010 1010
GBAS ID	24	—	—	BELL	000010 000101 001100 001100
Message type identifier	8	1 to 101	1	2	0000 0010
Message length	8	10 to 222 bytes	1 byte	43	0010 1011
Message (Type 2 example)					
GBAS reference receivers	2	2 to 4	1	4	10
Ground accuracy designator letter	2	—	—	C	10
Spare	1	—	—	—	0
GBAS continuity/integrity designator	3	0 to 7	1	2	010
Local magnetic variation	11	±180°	0.25°	E58.0°	000 1110 1000
Reserved	5	—	zero	—	0000 0
$\sigma_{vert\_iono\_gradient}$	8	0 to 25.5 x 10^{-6} m/m	0.1 x 10^{-6} m/m	4 x 10^{-6}	0010 1000
Refractivity index	8	16 to 781	3	379	1111 1001
Scale height	8	0 to 25 500 m	100 m	100 m	0000 0001
Refractivity uncertainty	8	0 to 255	1	20	0001 0100
Latitude	32	±90.0°	0.0005 arcsec	N45° 40’ 32” (+164432”)	0001 0011 1001 1010 0001 0001 0000 0000
Longitude	32	±180.0°	0.0005 arcsec	W93° 25’ 13” (-336313”)	1101 0111 1110 1000 1000 1010 1011 0000

DATA CONTENT DESCRIPTION	*BITS USED*	*RANGE OF VALUES*	*RESOLUTION*	*VALUES*	*BINARY REPRESENTATION (NOTE 1)*
Ellipsoid height	24	±83 886.07 m	0.01 m	892.55 m	0000 0001 0101 1100 1010 0111
Additional Data Block 1					
Reference station data selector	8	0 to 48	1	5	0000 0101
Maximum use distance (D_{max})	8	2 to 510 km	2 km	50 km	0001 1001
$K_{md\_e\_POS,GPS}$	8	0 to 12.75	0.05	6	0111 1000
$K_{md\_e,GPS}$	8	0 to 12.75	0.05	5	0110 0100
$K_{md\_e\_POS,GLONASS}$	8	0 to 12.75	0.05	0	0000 0000
$K_{md\_e,GLONASS}$	8	0 to 12.75	0.05	0	0000 0000
Additional Data Block 4					
Additional data block length	8	3	1 byte	3	0000 0011
Additional data block number	8	4	1	4	0000 0100
Slot group definition	8	—	—	E+F	0011 0000
Additional Data Block 3					
Additional Data Block Length	8	6	1 byte	6	0000 0110
Additional Data Block Number	8	3	1	3	0000 0011
$K_{md\_e\_D,GPS}$	8	0 to 12.75	0.05	5.55	0110 1111
$K_{md\_e\_D,GLONASS}$	8	0 to 12.75	0.05	0	0000 0000
$\sigma_{vert\_iono\_gradient\_D}$	8	0 – 25.5 x 10^{-6} m/m	0.1 x 10^{-6} m/m	4 x 10^{-6}	0010 1000
Y_{EIG}	5	0 to 3.0 m	0.1	1	0 1010
M_{EIG}	3	0 to 0.7 m/km	0.1	0.3	011
Message Block 1 CRC	32	—	—	—	0011 1100 1110 0001 1000 0100 1011 1011
Message Block 2 (Type 3 message)					
Message Block Header					
Message block identifier	8	—	—	Normal	1010 1010
GBAS ID	24	—	—	BELL	000010 000101 001100 001100
Message type identifier	8	1 to 101	1	3	0000 0011
Message length	8	N/A	1 byte	164	1010 0100
Message (Type 3 example)					
Filler	1232	—	—	—	1010 1010 ….. 1010 1010
Message Block 2 CRC	32	—	—	—	0110 1101 1011 1001 1110 0100 1110 0100
Application FEC	48	—	—	—	1111 0110 0011 0100 1101 1001 1110 0010 1110 0011 1111 1101

DATA CONTENT DESCRIPTION	*BITS USED*	*RANGE OF VALUES*	*RESOLUTION*	*VALUES*	*BINARY REPRESENTATION (NOTE 1)*
Input to the bit scrambling (Note 2)	0 45 58 02 55 30 CA 10 40 D4 52 17 00 14 9F 80 28 00 88 59 C8 0D 51 17 EB E5 3A 80 A0 98 1E 26 00 00 C0 20 0C 60 C0 F6 00 14 56 DD 21 87 3C 55 30 CA 10 C0 25 55 27 27 9D B6 BF C7 47 9B 2C				
Output from the bit scrambling (Note 3)	0 63 6F 8A 1F 2F D2 3B 9F 4E 87 CE 32 C8 D9 50 DE C1 C1 5A D4 09 7E E7 81 5A 5C D4 28 56 00 CE 29 60 A3 5F 77 34 64 38 71 03 15 16 24 9C CF 8F 8A 13 B6 1D AC 78 B6 C7 D0 93 58 5D 46 B5 6F D5 0C AA 77 FE D3 30 A2 27 E1 EC E4 F7 17 2D AD F4 0B 29 82 04 61 96 E4 50 E9 58 FA B8 C0 38 99 C7 BB 6C 3D 09 CA 7B 7E C2 CF 60 8D 18 75 B9 2B C5 FC 94 C8 57 79 52 C5 5F 6A B2 FF DF 33 4D DD 74 B5 28 2A 06 01 91 9B A4 43 E9 63 05 1D 95 B4 54 29 56 05 51 95 5B AA BC 00 36 66 2E EE 0F 0E 72 71 21 25 E5 EB 14 FD A8 CB F8 83 38 62 39 1E 3A 4E 3E 8E 30 71 D9 24 BA 17 C1 AC 9B F7 BC D3 C8 A3 78 1D 39 B5 C4 2B 69 FD 04 CA 68 81 07 9A 1E 33 C1 86 6F 86 78 98 87 95				
Fill bits	0 to 2	—	—	2	00
Power ramp-down	9	—	—	—	000 000 000
D8PSK Symbols (Note 4)	00000035 11204546 31650102 46331130 13067746 52652552 60712455 15066026 22433136 20007526 34111714 74536644 75444673 47266102 52635407 12243401 11561037 01237127 60553360 64340421 37024663 76701711 41435042 46314343 14302740 43711436 70511643 01271030 13504154 47365114 45511504 12200201 40164744 00021467 34131754 52554125 73741336 24044706 62272634 50547410 75654505 73645775 05153625 27427624 71315376 42507750 01000470 73036771 61401006 63561510 31143140 01422617 26364743 33357073 46405563 35412370 11472764 14014631 72320522 11576761 26127747 24352562 32277467 01242252 66037246 31604613 72367522 27243731 56617534 16114672 47000774 37674402 66002316 56521466 56347666 6				

Notes.—

1. *The rightmost bit is the LSB of the binary parameter value and is the first bit transmitted or sent to the bit scrambler. All data fields are sent in the order specified in the table.*
2. *This field is coded in hexadecimal with the first bit to be sent to the bit scrambler as its MSB. The first character represents a single bit.*
3. *In this example, fill bits are not scrambled.*
4. *This field represents the phase, in units of π/4 (e.g. a value of 5 represents a phase of 5π/4 radians), relative to the phase of the first symbol.*

Table D-17. Example of a Type 4 message

DATA CONTENT DESCRIPTION	*BITS USED*	*RANGE OF VALUES*	*RESOLUTION*	*VALUES*	*BINARY REPRESENTATION (NOTE 1)*
BURST DATA CONTENT					
Power ramp-up and settling	15				000 0000 0000 0000
Synchronization and ambiguity resolution	48				010 0011 1110 1111 1100 0110 0011 1011 0000 0011 1100 1000 0
SCRAMBLED DATA					
Station slot identifier (SSID)	3	—	—	D	01 1
Transmission length (bits)	17	0 to 1 824 bits	1 bit	784	000 0000 1100 0100 00
Training sequence FEC	5	—	—	—	0000 0
APPLICATION DATA MESSAGE BLOCK					
Message Block (Type 4 message)					

DATA CONTENT DESCRIPTION	*BITS USED*	*RANGE OF VALUES*	*RESOLUTION*	*VALUES*	*BINARY REPRESENTATION (NOTE 1)*
Message Block Header					
Message block identifier	8	—	—	Normal	1010 1010
GBAS ID	24	—	—	CMJ	0000 1100 1101 0010 1010 0000
Message type identifier	8	1 to 8	1	4	0000 0100
Message length	8	10 to 222 bytes	1 byte	92	0101 1100
Message (Type 4 example)					
FAS Data Set 1					
Data set length	8	2 to 212	1 byte	41	0010 1001
FAS Data Block 1					
Operation type	4	0 to 15	1	0	0000
SBAS service provider	4	0 to 15	1	15	1111
Airport ID	32	—	—	LFBO	0000 1100 0000 0110 0000 0010 0000 1111
Runway number	6	1 to 36	1	15	00 1111
Runway letter	2	—	—	R	01
Approach performance designator	3	0 to 7	1	CAT 1	001
Route indicator	5	—	—	C	0001 1
Reference path data selector (RPDS)	8	0 to 48	1	3	0000 0011
Reference path identifier	32	—	—	GTBS	0000 0111 0001 0100 0000 0010 0001 0011
LTP/FTP latitude	32	±90.0°	0.0005 arcsec	43.6441075° N	0001 0010 1011 1010 1110 0010 1000 0110
LTP/FTP longitude	32	±180.0°	0.0005 arcsec	1.345940°E	0000 0000 1001 0011 1101 1110 1001 0000
LTP/FTP height	16	–512.0 to 6 041.5 m	0.1 m	197.3	0001 1011 1011 0101
ΔFPAP latitude	24	±1°	0.0005 arcsec	–0.025145°	1111 1101 0011 1100 1100 1100
ΔFPAP longitude	24	±1°	0.0005 arcsec	0.026175°	0000 0010 1110 0000 0010 1100
Approach threshold crossing height (TCH)	15	0 to 1 638.35 m (0 to 3 276.7 ft)	0.05 m (0.1 ft)	17.05 m	000 0001 0101 0101
Approach TCH units selector	1	0 = ft; 1 = m	—	metres	1
Glide path angle (GPA)	16	0 to 90°	0.01°	3°	0000 0001 0010 1100
Course width	8	80.0 to 143.75 m	0.25 m	105	0110 0100
ΔLength offset	8	0 to 2 032 m	8 m	0	0000 0000
FAS Data Block 1 CRC	32	—	—	—	1010 0010 1010 0101 1010 1000 0100 1101
FASVAL/Approach status	8	0 to 25.4	0.1 m	10	0110 0100
FASLAL/Approach status	8	0 to 50.8	0.2 m	40	1100 1000
FAS Data Set 2					
Data set length	8	2 to 212	1 byte	41	0010 1001
FAS Data Block 2					
Operation type	4	0 to 15	1	0	0000
SBAS service provider	4	0 to 15	1	01	0001
Airport ID	32	—	—	LFBO	0000 1100 0000 0110 0000 0010 0000 1111

DATA CONTENT DESCRIPTION	*BITS USED*	*RANGE OF VALUES*	*RESOLUTION*	*VALUES*	*BINARY REPRESENTATION (NOTE 1)*
Runway number	6	1 to 36	1	33	10 0001
Runway letter	2	—	—	R	01
Approach performance designator	3	0 to 7	1	CAT 1	001
Route indicator	5	—	—	A	0000 1
Reference path data selector (RPDS)	8	0 to 48	1	21	0001 0101
Reference path identifier	32	—	—	GTN	0000 0111 0001 0100 0000 1110 0010 0000
LTP/FTP latitude	32	±90.0°	0.0005 arcsec	43.6156350° N	0001 0010 1011 0111 1100 0001 1011 1100
LTP/FTP longitude	32	±180.0°	0.0005 arcsec	1.3802350°E	0000 0000 1001 0111 1010 0011 0001 1100
LTP/FTP height	16	–512.0 to 6 041.5 m	0.1 m	200.2 m	0001 1011 1101 0010
ΔFPAP latitude	24	±1°	0.0005 arcsec	0.02172375°	0000 0010 0110 0010 1111 1011
ΔFPAP longitude	24	±1°	0.0005 arcsec	–0.0226050°	1111 1101 1000 0100 0011 1100
Approach threshold crossing height (TCH)	15	0 to 1 638.35 m (0 to 3 276.7 ft)	0.05 m (0.1 ft)	15.25 m	000 0001 0011 0001
Approach TCH units selector	1	0 = ft; 1 = m	—	metres	1
Glide path angle (GPA)	16	0 to 90°	0.01°	3.01°	0000 0001 0010 1101
Course width	8	80.0 to 143.75 m	0.25 m	105	0110 0100
ΔLength offset	8	0 to 2 032 m	8 m	0	0000 0000
FAS data block 2 CRC	32	—	—	—	1010 1111 0100 1101 1010 0000 1101 0111
FASVAL/Approach status	8	0 to 25.4	0.1 m	10	0110 0100
FASLAL /Approach status	8	0 to 50.8	0.2 m	40	1100 1000
Message Block CRC	32	—	—	—	0101 0111 0000 0011 1111 1110 1001 1011
APPLICATION FEC	48	—	—	—	0001 1011 1001 0001 0010 1010 1011 1100 0010 0101 1000 0101
Input to the bit scrambling (Note 2)	1 82 30 00 55 05 4B 30 20 3A 94 0F F0 40 60 30 F2 98 C0 C8 40 28 E0 61 47 5D 48 09 7B C9 00 AD D8 33 3C BF 34 07 40 AA 81 34 80 26 00 B2 15 A5 45 26 13 94 08 F0 40 60 30 86 90 A8 04 70 28 E0 3D 83 ED 48 38 C5 E9 00 4B D8 DF 46 40 3C 21 BF 8C 81 B4 80 26 00 EB 05 B2 F5 26 13 D9 7F C0 EA A1 A4 3D 54 89 D8				
Output from the bit scrambling (Note 3)	1 A4 07 88 1F 1A 53 1B FF A0 41 D6 C2 9C 26 E0 04 59 89 CB 5C 2C CF 91 2D E2 2E 5D F3 07 1E 45 F1 53 5F C0 4F 53 E4 64 F0 23 C3 ED 05 A9 E6 7F FF FF B5 49 81 DD A3 F2 B5 40 9D A0 17 90 12 60 64 7C CF E3 BE A0 1E 72 FF 61 6E E4 02 44 D9 1E D2 FD 63 D1 12 C3 5A 00 0E F8 89 FE 4C 12 0C 78 4F 9D 55 08 16 F6				
Fill bits	0 to 2	—	—	1	0
Power ramp down	9	—	—	—	000 000 000
D8PSK Symbols (Note 4)	0000003511204546316504322300771662170713052556673176724345377776157763461661570543615214576405133401677521423130444306130115026677434175560327624163052753654001524705142032257533346255437707605652760631444624316310135372225012076040752643510345771407777041566527360012232400740203144336275444 4				

Notes.—

1. *The rightmost bit is the LSB of the binary parameter value and is the first bit transmitted or sent to the bit scrambler. All data fields are sent in the order specified in the table.*
2. *This field is coded in hexadecimal with the first bit to be sent to the bit scrambler as its MSB. The first character represents a single bit.*
3. *In this example, fill bits are not scrambled.*
4. *This field represents the phase, in units of π/4 (e.g. a value of 5 represents a phase of 5π/4 radians), relative to the phase of the first symbol.*

Table D-18. Example of a Type 5 message

DATA CONTENT DESCRIPTION	*BITS USED*	*RANGE OF VALUES*	*RESOLUTION*	*VALUES*	*BINARY REPRESENTATION (NOTE 1)*
BURST DATA CONTENT					
Power ramp-up and settling	15				000 0000 0000 0000
Synchronization and ambiguity resolution	48				0100 0111 1101 1111 1000 1100 0111 0110 0000 0111 1001 0000
SCRAMBLED DATA					
Station slot identifier (SSID)	3	—	—	D	01 1
Transmission length (bits)	17	0 to 1 824 bits	1 bit	272	000 0000 0100 0100 00
Training sequence FEC	5	—	—	—	0001 1
APPLICATION DATA MESSAGE BLOCK					
Message Block (Type 5 message)					
Message Block Header					
Message block identifier	8	—	—	Normal	1010 1010
GBAS ID	24	—	—	CMJ	0000 1100 1101 0010 1010 0000
Message type identifier	8	1 to 8	1	5	0000 0101
Message length	8	10 to 222 bytes	1 byte	28	0001 1100
Message (Type 5 example)					
Modified Z-count	14	0 to 1 199.9 s	0.1 s	100 s	00 0011 1110 1000
Spare	2	—	—	—	00
Number of impacted sources (N)	8	0 to 31	1	2	0000 0010
First impacted source					
Ranging source ID	8	1 to 255	1	4	0000 0100
Source availability sense	1	—	—	Will cease	0
Source availability duration	7	0 to 1 270 s	10 s	50 s	0000 101
Second impacted source					
Ranging source ID	8	1 to 255	1	3	0000 0011
Source availability sense	1	—	—	Will start	1
Source availability duration	7	0 to 1 270 s	10 s	200 s	0010 100
Number of obstructed approaches (A)	8	0 to 255	1	2	0000 0010
First obstructed approach					
Reference path data selector (RPDS)	8	0 to 48	1	21	0001 0101
Number of impacted sources for first obstructed approach (N_A)	8	1 to 31	1	2	0000 0010
First impacted ranging source of first obstructed approach					
Ranging source ID	8	1 to 255	1	12	0000 1100
Source availability sense	1	—	—	Will cease	0
Source availability duration	7	0 to 1 270 s	10 s	250 s	0011 001

DATA CONTENT DESCRIPTION	*BITS USED*	*RANGE OF VALUES*	*RESOLUTION*	*VALUES*	*BINARY REPRESENTATION (NOTE 1)*
Second impacted ranging source of first obstructed approach					
Ranging source ID	8	1 to 255	1	14	0000 1110
Source availability sense	1	—	—	Will cease	0
Source availability duration	7	0 to 1 270 s	10 s	1 000 s	1100 100
Second obstructed approach					
Reference path data selector (RPDS)	8	0 to 48	1	14	0000 1110
Number of impacted sources for second obstructed approach (N_A)	8	1 to 31	1	1	0000 0001
First impacted ranging source of second obstructed approach					
Ranging source ID	8	1 to 255	1	12	0000 1100
Source availability sense	1	—	—	Will cease	0
Source availability duration	7	0 to 1 270 s	10 s	220 s	0010 110
Message Block CRC	32	—	—	—	1101 1011 0010 1111 0001 0010 0000 1001
APPLICATION FEC	48	—	—	—	0011 1110 1011 1010 0001 1110 0101 0110 1100 1011 0101 1011
Input to the bit scrambling (Note 2)	1 82 20 18 55 05 4B 30 A0 38 17 C0 40 20 50 C0 94 40 A8 40 30 4C 70 13 70 80 30 34 90 48 F4 DB DA D3 6A 78 5D 7C				
Output from the bit scrambling	1 A4 17 90 1F 1A 53 1B 7F A2 C2 19 72 FC 16 10 62 81 E1 43 2C 48 5F E3 1A 3F 56 60 18 86 EA 33 F3 B3 09 07 26 28				
Fill bits	0 to 2	—	—	0	
Power ramp-down	9				000 000 000
D8PSK Symbols (Note 3)	0000003511204546316504322056660551067602416124477363463220700103224006601332124166231163643777110173115743023234451466444444				

Notes.—

1. *The rightmost bit is the LSB of the binary parameter value and is the first bit transmitted or sent to the bit scrambler. All data fields are sent in the order specified in the table.*
2. *This field is coded in hexadecimal with the first bit to be sent to the bit scrambler as its MSB. The first character represents a single bit.*
3. *Symbols are represented by their differential phase with respect to the first symbol of the message, in units of π/4 (e.g. a value of 5 represents a phase of 5π/4 radians) relative to the first symbol.*

Table D-19. Example of a Type 11 VDB message

DATA CONTENT DESCRIPTION	*BITS USED*	*RANGE OF VALUES*	*RESOLUTION*	*VALUES*	*BINARY REPRESENTATION (NOTE 1)*
BURST DATA CONTENT					
Power ramp-up and settling	15				000 0000 0000 0000
Synchronization and ambiguity resolution	48				0100 0111 1101 1111 1000 1100 0111 0110 0000 0111 1001 0000
SCRAMBLED DATA					
Station slot identifier (SSID)	3	—	—	E	100
Transmission length (bits)	17	0 to 1 824 bits	1 bit	440	0 0000 0001 1011 1000
Training sequence FEC	5	—	—	-	0 1011
APPLICATION DATA MESSAGE BLOCK					
Message Block 1 (Type 11 message)					
Message Block Header					
Message block identifier	8	—	—	Normal	1010 1010
GBAS ID	24	—	—	BELL	0000 1000 0101 0011 0000 1100
Message type identifier	8	1 to 101	1	11	0000 1011
Message length	8	10 to 222 bytes	1 byte	49	0011 0001
Message (Type 11 example)					
Modified Z-count	14	0 to 1 199.9 s	0.1 s	100 s	00 0011 1110 1000
Additional message flag	2	0 to 3	1	0	00
Number of measurements	5	0 to 18	1	5	0 0101
Measurement type	3	0 to 7	1	C/A L1	000
Ephemeris Decorrelation Parameter (P_D)	8	0 to 1.275 $\times 10^{-3}$m/m	5×10^{-6}m/m	1×10^{-4}	0001 0100
Measurement Block 1					
Ranging source ID	8	1 to 255	1	12	0000 1100
Pseudo-range correction (PRC_{30})	16	±327.67 m	0.01 m	+1.04 m	0000 0000 0110 1000
Range rate correction (RRC_{30})	16	±32.767 m	0.001 m/s	–0.18 m/s	1111 1111 0100 1100
$\sigma_{pr\_gnd,D}$	8	0 to 5.08 m	0.02 m	0.96 m	0011 0000
$\sigma_{pr\_gnd,30}$	8	0 to 5.08 m	0.02 m	1.00 m	0011 0010
Measurement Block 2					
Ranging source ID	8	1 to 255	1	4	0000 0100
Pseudo-range correction (PRC_{30})	16	±327.67 m	0.01 m	–1.08 m	1111 1111 1001 0100

DATA CONTENT DESCRIPTION	*BITS USED*	*RANGE OF VALUES*	*RESOLUTION*	*VALUES*	*BINARY REPRESENTATION (NOTE 1)*
Range rate correction (RRC_{30})	16	±32.767 m	0.001 m/s	+0.18 m/s	0000 0000 1011 0100
$\sigma_{pr\_gnd,D}$	8	0 to 5.08 m	0.02 m	0.24 m	0000 1100
$\sigma_{pr\_gnd,30}$	8	0 to 5.08 m	0.02 m	0.6 m	0001 1110
Measurement Block 3					
Ranging source ID	8	1 to 255	1	2	0000 0010
Pseudo-range correction (PRC_{30})	16	±327.67 m	0.01 m	+1.2 m	0000 0000 0111 1000
Range rate correction (RRC_{30})	16	±32.767 m	0.001 m/s	0.3 m/s	0000 0001 0010 1100
$\sigma_{pr\_gnd,D}$	8	0 to 5.08 m	0.02 m	0.64 m	0010 0000
$\sigma_{pr\_gnd,30}$	8	0 to 5.08 m	0.02 m	0.74 m	0010 0101
Measurement Block 4					
Ranging source ID	8	1 to 255	1	23	0001 0111
Pseudo-range correction (PRC_{30})	16	±327.67 m	0.01 m	–2.64 m	1111 1110 1111 1000
Range rate correction (RRC_{30})	16	±32.767 m	0.001 m/s	–0.51 m/s	1111 1110 0000 0010
$\sigma_{pr\_gnd,D}$	8	0 to 5.08 m	0.02 m	0.08 m	0000 0100
$\sigma_{pr\_gnd,30}$	8	0 to 5.08 m	0.02 m	0.14 m	0000 0111
Measurement Block 5					
Ranging source ID	8	1 to 255	1	122	0111 1010
Pseudo-range correction (PRC_{30})	16	±327.67 m	0.01 m	+0.8 m	0000 0000 0101 0000
Range rate correction (RRC_{30})	16	±32.767 m	0.001 m/s	–0.25 m/s	1111 1111 0000 0110
$\sigma_{pr\_gnd,D}$	8	0 to 5.08 m	0.02 m	0.92 m	0010 1110
$\sigma_{pr\_gnd,30}$	8	0 to 5.08 m	0.02 m	1.08 m	0011 0110
Message Block CRC	32	—	—	—	0010 1111 0000 0101 1101 1001 0000 1100
APPLICATION FEC	48	—	—	—	1001 0011 1110 0111 1101 1100 0100 0001 0100 0101 1011 1110
Input to the bit scrambling (Note 2)	0 47 60 1A 55 30 CA 10 D0 8C 17 C0 A0 28 30 16 00 32 FF 0C 4C 20 29 FF 2D 00 30 78 40 1E 00 34 80 04 A4 E8 1F 7F 40 7F 20 E0 5E 0A 00 60 FF 74 6C 30 9B A0 F4 7D A2 82 3B E7 C9				
Output from the bit scrambling (Note 3)	0 61 57 92 1F 2F D2 3B 0F 16 C2 19 92 F4 76 C6 F6 F3 B6 0F 50 24 06 0F 47 BF 56 2C C8 D0 1E DC A9 64 C7 97 64 2B E4 B1 51 F7 1D C1 05 7B 0C AE D6 E9 3D 7D 7D 50 41 10 BE 21 C4				
Fill bits	0 to 2	—	—	0	
Power ramp-down	9	—	—	—	000 000 000
D8PSK Symbols (Note 4)	00000035 11204546 31650101 42701130 13067746 60457114 40234621 31760262 76357705 07725551 13760416 17615700 43341354 25047116 53736646 34577501 64015223 34742121 71757170 16162053 65544366 41033007 777				

DATA CONTENT DESCRIPTION	*BITS USED*	*RANGE OF VALUES*	*RESOLUTION*	*VALUES*	*BINARY REPRESENTATION (NOTE 1)*

Notes.—

1. *The rightmost bit is the LSB of the binary parameter value and is the first bit transmitted or sent to the bit scrambler. All data fields are sent in the order specified in the table.*
2. *This field is coded in hexadecimal with the first bit to be sent to the bit scrambler as its MSB. The first character represents a single bit.*
3. *In this example fill bits are not scrambled.*
4. *This field represents the phase, in units of π/4 (e.g. a value of 5 represents a phase of 5 π/4 radians), relative to the phase of the first symbol.*

7.18 Type 101 message

Type 101 message is an alternative to Type 1 message developed to fit the specific needs of GRAS systems. The primary difference in the contents and application of these two message types is two-fold: (a) Type 101 message has a larger available range for σpr_gnd values and (b) ground subsystem time-to-alert is larger for a system broadcasting Type 101 messages. The first condition would typically occur in a system where a broadcast station covers a large area, such that decorrelation errors increase the upper limit of the pseudo-range correction errors. The second condition may be typical for systems where a central master station processes data from multiple receivers dispersed over a large area.

7.19 Airborne processing for GBAS approach service types

Note.— In order to ensure the required performance and functional objectives for GAST D are achieved, it is necessary for the airborne equipment to meet defined performance and functional standards. The relevant minimum operational performance standards (MOPS) are detailed in RTCA DO-253D.

7.19.1 *Differential position solution for the GBAS positioning service*. The position solution used to provide position, velocity and time outputs is based on 100-second smoothed pseudo-ranges corrected with corrections obtained from message Type 1 or message Type 101.

7.19.2 *Differential position solution for approach service GAST A, B and C*. When the active approach service type is A, B or C, the position solution used to generate deviations is based on 100 second smoothed pseudo-ranges corrected with corrections obtained from message Type 1 or message Type 101. The projection matrix, S, used to compute the position solution (Appendix B, 3.6.5.5.1.1.2) is computed based on σi computed using σ_{pr_gnd}[i] from message Type 1 or message Type 101 and $\sigma_{iono,i}$ based on $\sigma_{vert\_iono\_gradient}$ from message Type 2.

7.19.3 *Differential position solutions for approach service GAST D*. When GAST D is the active approach service type, the airborne equipment will compute two different position solutions, one based on 30-second smoothed pseudo-ranges and the other based on 100-second smoothed pseudo-ranges. The following characterizes the standard processing required by the MOPS:

a) the position solution used to develop deviations is based on 30-second smoothed pseudo-ranges corrected with corrections obtained from message Type 11;

b) the projection matrix, S, used for both position solutions is computed based on $\sigma_{w,i}$ computed using $\sigma_{pr\_gnd\_30s}$ from message Type 11 and $\sigma_{iono,i}$ based on $\sigma_{vert\_iono\_gradient\_D}$ from message Type 2 Additional Data Block 3;

c) a second position solution is computed using the projection matrix from b) and the 100-second smoothed pseudo-ranges corrected with corrections obtained from message Type 1; and

d) both position solutions are based on the same set of satellites as used for the position solution defined in a) above.

Additional information regarding the intended use of these dual position solutions is given in 7.5.6.1 of this attachment.

7.20 Type 11 message

A Type 11 message is required for FAST D ground subsystems. The Type 11 message contains differential corrections derived from pseudo-range data that has been carrier smoothed with a time constant of 30 seconds. The Type 11 message also includes alternative parameters for integrity bounding and for optimal weighting of measurements. Additional information regarding the standard processing of parameters in the Type 11 message is given in 7.19.

7.21 Slot occupancy

The slot occupancy requirement in Appendix B, 3.6.7.4.1.3 is for ground subsystems that support authentication. The slot occupancy is the length of a burst divided by the length of a single time slot. In more detail and expressed in number of bits:

slot occupancy = (88 bits + up to 1 776 bits application data + 57 to 59 bits for application FEC, fill bits and ramp down) / 1 968.75 bits

The numerator in the formula sums all bits that are included in a single burst of the ground subsystem. These are the first 88 bits from ramp up to training sequence FEC, up to 1 776 application data bits, 48 application FEC bits, 0 to 2 fill bits and 9 bits for ramp down. For the denominator 1 968.75 bits are the calculated number of bits that can be transmitted in 62.5 ms (Appendix B, 3.6.3.1) using the data rate of 31 500 bits/s (Appendix B, 3.6.2.5).

8. SIGNAL QUALITY MONITOR (SQM) DESIGN

8.1 The objective of the signal quality monitor (SQM) is to detect satellite signal anomalies in order to prevent aircraft receivers from using misleading information (MI). MI is an undetected aircraft pseudo-range differential error greater than the maximum error (MERR) that can be tolerated. For GAST D equipment, additional requirements are in place to assure detection before the differential pseudo-range error reaches a specified value (see Appendix B, 3.6.7.3.3). These large pseudo-range errors are due to code correlation peak distortion caused by satellite payload failures. If the reference receiver used to create the differential corrections and the aircraft receiver have different measurement mechanizations (i.e. receiver bandwidth and tracking loop correlator spacing), the signal distortion affects them differently. The SQM must protect the aircraft receiver in cases when mechanizations are not similar. SQM performance is further defined by the probability of detecting a satellite failure and the probability of incorrectly annunciating a satellite failure.

8.2 The signal effects that might cause a GBAS or SBAS to output MI can be categorized into three different effects on the correlation function as follows:

a) *Dead zones*: If the correlation function loses its peak, the receiver's discriminator function will include a flat spot or dead zone. If the reference receiver and aircraft receiver settle in different portions of this dead zone, MI can result.

b) *False peaks*: If the reference receiver and aircraft receiver lock to different peaks, MI could exist.

c) *Distortions*: If the correlation peak is misshapen, an aircraft that uses a correlator spacing other than the one used by the reference receivers may experience MI.

8.3 The threat model proposed for use in assessment of SQM has three parts that can create the three correlation peak pathologies listed above.

8.4 Threat Model A consists of the normal code signal except that all the positive chips, and positive/negative sub-carrier chips for Galileo E1-C signal and BDS B1C_pilot signal, have a falling edge that leads or lags relative to the correct end-time for that chip. This threat model is associated with a failure in the navigation data unit (NDU), the digital partition of a satellite. The occurrences of Threat Model A on GPS L1 C/A and on GPS L5 Q5 signals are independent events. If overlapping in time, the signs and sizes of leads and lags may be different on L1 C/A and L5 Q5 signals.

8.4.1 Threat Model A for GPS has a single parameter Δ, which is the lead ($\Delta < 0$) or lag ($\Delta > 0$) expressed in microseconds. The range for this parameter is $-0.12 \leq \Delta \leq 0.12$ for the L1 C/A code signal. The range for this parameter is $-0.1 \leq \Delta \leq 0.1$ for the GPS L5 Q5 signal. Threat Model A for GLONASS has a single parameter Δ, which is the lead ($\Delta < 0$) or lag ($\Delta > 0$) expressed in microseconds. The range for this parameter is $-0.22 \leq \Delta \leq 0.22$ for GLONASS L1OF signal. The range for this parameter is $-0.1 \leq \Delta \leq 0.1$ for GLONASS L1OC signal and $-0.1 \leq \Delta \leq 0.1$ for GLONASS L3OC. Threat Model A for Galileo has a single parameter Δ, which is the lead ($\Delta < 0$) or lag ($\Delta > 0$) expressed in microseconds. The range for this parameter is $-0.12 \leq \Delta \leq 0.12$ for Galileo E1-C signal. The range for this parameter is $-0.1 \leq \Delta \leq 0.1$ for Galileo E5a-Q signal. Threat Model A for BDS has a single parameter Δ, which is the lead ($\Delta < 0$) or lag ($\Delta > 0$) expressed in microseconds. The range for this parameter is $-0.05 \leq \Delta \leq 0.05$ for BDS B1C_pilot signal. The range for this parameter is $-0.05 \leq \Delta \leq 0.05$ for BDS B2a_pilot signal.

8.4.2 Within this range, threat Model A generates the dead zones described above. (Waveforms with lead need not be tested, because their correlation functions are simply advances of the correlation functions for lag; hence, the MI threat is identical.)

8.5 Threat Model B introduces amplitude modulation and models degradations in the analog section of the core constellation satellite. More specifically, it consists of the output from a second order system when the nominal code baseband signal is the input. Threat Model B assumes that the degraded satellite subsystem can be described as a linear system dominated by a pair of complex conjugate poles. These poles are located at $\sigma \pm j2\pi f_d$, where σ is the damping factor in 10^6 nepers/second and f_d is the resonant frequency with units of 10^6 cycles/second.

8.5.1 The unit step response of a second order system is given by:

$$e(t) = \begin{cases} 0 & t \leq 0 \\ 1 - \exp(-\sigma t)\left[\cos\omega_d t + \dfrac{\sigma}{\omega_d}\sin\omega_d t\right] & t \geq 0 \end{cases}$$

where $\omega_d = 2\pi f_d$.

8.5.2 Threat Model B for GPS corresponding to second order anomalies uses the following ranges for the parameters Δ, f_d and σ:

$$\Delta = 0;\ 4 \leq f_d \leq 17;\ \text{and}\ 0.8 \leq \sigma \leq 8.8.$$

The occurrence of Threat Model A on the GPS L1 C/A signal, the occurrence of Threat Model B on GPS L1 C/A signal, the occurrence of Threat Model A on the GPS L5 Q5 signal and the occurrence of Threat Model B on the GPS L5 Q5 signal are independent events. The parameters characterizing the leads, lags, ringing frequency f_d, and decay parameter σ are not constrained to be the same size or sign on GPS L1 C/A and GPS L5 Q5 signals.

Threat Model B for GLONASS corresponding to second order anomalies uses the following ranges for the parameters defined above:

L1OF signal: $\Delta = 0;\ 10 \leq f_d \leq 20;\ \text{and}\ 2 \leq \sigma \leq 8.$
L1OC signal: $\Delta = 0;\ 0.1 \leq f_d \leq 14;\ \text{and}\ 0.1 \leq \sigma \leq 24.$
L3OC signal: $\Delta = 0;\ 0.1 \leq f_d \leq 8;\ \text{and}\ 0.1 \leq \sigma \leq 15.$

Threat Model B for Galileo corresponding to second order anomalies uses the following ranges for the parameters defined above:

E1-C signal: $\Delta = 0$; $0.1 \leq f_d \leq 18$; and $0.1 \leq \sigma \leq 63$.
E5a-Q signal: $\Delta = 0$; $0.1 \leq f_d \leq 8$; and $0.1 \leq \sigma \leq 23$.

Threat Model B for BDS corresponding to second order anomalies uses the following ranges for the parameters defined above:

B1C_pilot signal: $\Delta = 0$; $1.5 \leq f_d \leq 18$; and $0.1 \leq \sigma \leq 20$.
B2a_pilot signal: $\Delta = 0$; $4 \leq f_d \leq 18$; and $0.1 \leq \sigma \leq 18$.

8.5.3 Within these parameter ranges, Threat Model B generates distortions of the correlation peak as well as false peaks.

8.6 Threat Model C introduces both lead/lag and amplitude modulation. Specifically, it consists of outputs from a second order system when the C/A code signal at the input suffers from lead or lag. This waveform is a combination of the two effects described above.

8.6.1 Threat Model C for GPS includes parameters Δ, f_d and σ with the following ranges:

L1 signal: $-0.12\ \mu s \leq \Delta \leq 0.12\ \mu s$; $7.3 \leq f_d \leq 13$; and $0.8 \leq \sigma \leq 8.8$.
L5 signal: $-0.10\ \mu s \leq \Delta \leq 0.10\ \mu s$; $7.3 \leq f_d \leq 13$; and $0.8 \leq \sigma \leq 8.8$.

Threat Model C for GLONASS includes parameters Δ, f_d and σ with the following ranges:

L1OF signal: $-0.22\ \mu s \leq \Delta \leq 0.22\ \mu s$; $10 \leq f_d \leq 20$; and $2 \leq \sigma \leq 8$.
L1OC signal: $-0.1\ \mu s \leq \Delta \leq 0.1\ \mu s$; $0.1 \leq f_d \leq 14$; and $0.1 \leq \sigma \leq 24$.
L3OC signal: $-0.1\ \mu s \leq \Delta \leq 0.1\ \mu s$; $0.1 \leq f_d \leq 8$; and $0.1 \leq \sigma \leq 15$.

Threat Model C for Galileo includes parameters Δ, f_d and σ with the following ranges:

E1-C signal: $-0.12\ \mu s \leq \Delta \leq 0.12\ \mu s$; $0.1 \leq f_d \leq 18$; and $0.1 \leq \sigma \leq 63$.
E5a-Q signal: $-0.1\ \mu s \leq \Delta \leq 0.1\ \mu s$; $0.1 \leq f_d \leq 8$; and $0.1 \leq \sigma \leq 23$.

Threat Model C for BDS includes parameters Δ, f_d and σ with the following ranges:

B1C_pilot signal: $-0.05 \leq \Delta \leq 0.05$; $1.5 \leq f_d \leq 18$; and $0.1 \leq \sigma \leq 20$.
B2a_pilot signal: $-0.05 \leq \Delta \leq 0.05$; $4 \leq f_d \leq 18$; and $0.1 \leq \sigma \leq 18$.

8.6.2 Within these parameter ranges, threat Model C generates dead zones, distortions of the correlation peak and false peaks.

8.7 Unlike core constellation signals, the SBAS ranging signal is commissioned and controlled by the service provider. Moreover, the service provider also monitors the quality of the signal from the SBAS. To this end, the threat model will be specified and published by the service provider for each SBAS satellite. The SBAS SQM will be designed to protect all avionics that comply with Table D-21. Publication of the threat model is required for those cases where a service provider chooses to allow the SBAS L1 ranging signal from a neighbouring service provider to be used for precision approach by SBAS or GBAS. In these cases, the service provider will monitor the SBAS ranging signal from the neighbouring satellite.

8.8 In order to analyse the performance of a particular monitor design, the monitor limit must be defined and set to protect individual satellite pseudo-range error relative to the protection level, with an allocation of the ground subsystem integrity risk. The maximum tolerable error (denoted as MERR) for each ranging source i can be defined in GBAS, L1 SBAS and DFMC SBAS as:

$$MERR_{GBAS} = K_{ffmd}\sigma_{pr\_gnd,i} \text{ and}$$

$$MERR_{L1\ SBAS}=K_{V,PA}\sqrt{\sigma^2_{i,UDRE} + \min\{\sigma^2_{i,UIRE}\}}$$

$$MERR_{DFMC\ SBAS}=K_{V,PA}\sqrt{\sigma^2_{i,DFRE}}$$

for SBAS, and in particular for L1 SBAS APV and precision approach where min $\{\sigma^2_{i,UDRE}\}$ is the minimum possible value for any user, MERR is evaluated at the output of a fault-free user receiver and varies with satellite elevation angle and ground subsystem performance.

8.9 The SQM is designed to limit the worst differential error to values below the MERR in the case of a satellite anomaly. Typically, the SQM measures various correlation peak values and generates spacing and ratio metrics that characterize correlation peak distortion. Figure D-18 illustrates typical points at the top of a fault-free, unfiltered correlation peak.

8.9.1 A correlator pair is used for tracking. All other correlator values are measured with respect to this tracking pair.

8.9.2 Two types of test metrics are formed: early-minus-late metrics (D) that are indicative of tracking errors caused by peak distortion, and amplitude ratio metrics (R) that measure slope and are indicative of peak flatness or close-in, multiple peaks.

8.9.3 It is necessary that the SQM has a precorrelation bandwidth that is sufficiently wide to measure the narrow spacing metrics, so as not to cause significant peak distortion itself and not to mask the anomalies caused by the satellite failure. Typically, the SQM receiver must have a precorrelation bandwidth of at least 16 MHz for GPS L1 and at least 24 MHz for L5, at least 15 MHz for GLONASS, at least 24 MHz for Galileo and at least 24 MHz for BDS.

8.9.4 The test metrics are smoothed using low-pass digital filters. The time constant of these filters are to be shorter than those used jointly by the reference receivers for deriving differential corrections and by the aircraft receiver for smoothing pseudo-range measurements (and standardized at 100 seconds). The smooth metrics are then compared to thresholds. If any one of the thresholds is exceeded, an alarm is generated for that satellite.

8.9.5 The thresholds used to derive performance are defined as minimum detectable errors (MDEs) and minimum detectable ratios (MDRs). Fault-free false detection probability and missed detection probability are used to derive MDEs and MDRs. The noise in metrics (D) and (R), as denoted $\sigma_{D,test}$ and $\sigma_{R,test}$ below, is dominated by multipath errors. Note that the metric test can also have a mean value (μtest) caused by SQM receiver filter distortion. Threshold tests must also account for the mean values.

8.9.6 The MDE and MDR values used in the SQM performance simulations are calculated based on the following equations:

$$MDE = (K_{ffd} + K_{md})\ \sigma_{D,test} \text{ and}$$
$$MDR = (K_{ffd} + K_{md})\ \sigma_{R,test}$$

where

$K_{ffd} = 5.26$ is a typical fault-free detection multiplier representing a false detection probability of 1.5×10^{-7} per test. The false detection probability may be allocated to each metric used in the SQM depending on the number of metrics implemented;

$K_{md} = 3.09$ is a typical missed detection multiplier representing a missed detection probability of 10^{-3} per test. The allocation of the missed detection probability can be further optimised considering the probability of integrity risk induced by each distortion (given its differential bias) and the probability of integrity failure allocated to the signal distortion event;

$\sigma_{D,test}$ is the standard deviation of measured values of difference test metric D; and

$\sigma_{R,test}$ is the standard deviation of measured values of ratio test metric R.

8.9.7 If multiple independent SQM receivers are used to detect the failures, the sigma values can be reduced by the square root of the number of independent monitors.

8.9.8 A failure is declared if

$$| D,test - \mu_{D,test} | \geq MDE \text{ or}$$
$$| R,test - \mu_{R,test} | \geq MDR$$

for any of the tests performed, where $\mu_{X,test}$ is the mean value of the test X that accounts for fault-free SQM receiver filter distortion, as well as correlation peak distortion associated with the specific code. (Code correlation peaks can have different slopes across different codes within the same code family. In a simulation environment, however, this code distortion can be ignored, and a perfect correlation peak can be used, except for simulated filter distortion.)

8.10 The standard deviations of the test statistics, $\sigma_{D,test}$ and $\sigma_{R,test}$ can be determined via data collection on a multicorrelator receiver in the expected operating environment. The data collection receiver utilizes a single tracking pair of correlators and additional correlation function measurement points which are slaved to this tracking pair, as illustrated in Figure D-18 for GPS and GLONASS and in Figure D-19 for Galileo and BDS. Data is collected and smoothed for all available measurement points in order to compute the metrics. The standard deviation of these metrics define $\sigma_{D,test}$. It is also possible to compute these one sigma test statistics if a multipath model of the installation environment is available.

8.10.1 The resulting $\sigma_{D,test}$ is highly dependent on the multipath environment in which the data are collected. The deviation due to multipath can be an order of magnitude greater than that which would result from noise even at minimum carrier-to-noise level. This aspect illustrates the importance of the antenna design and siting criteria which are the primary factors in determining the level of multipath that will enter the receiver. Reducing multipath will significantly decrease the resulting MDEs and thus improve the SQM capabilities.

8.10.2 Mean values $\mu_{D,test}$ and $\mu_{R,test}$, on the other hand, are determined in a relatively error-free environment, such as through the use of core constellation satellite signal simulator as input. These mean values model the nominal SQM receiver's filter distortion of the autocorrelation peak, including the effects of distortion due to adjacent minor autocorrelation peaks. The mean values can differ for the various PRNs based on these properties.

8.10.3 The presence of nominal signal deformation biases may cause the distribution of the monitor detectors to have non-zero mean. These biases can be observed by averaging measurements taken from a real-world data collection. Note that the nominal biases may depend on elevation and they typically change slowly over time. For example, nominal GPS deformations are leads and lags that are present in unfaulted conditions and thus may exist all the time. The nominal GPS deformation is in the range $-0.01\ \mu s \leq \Delta \leq +0.01\ \mu s$.

8.10.4 The SQM for SBAS is validated for the signal distortions defined by the GPS, GLONASS, Galileo and BDS TM-A/B/C threat space only for a vertical alert limit greater or equal to 35 m.

8.11 In order for the ground monitor to protect users against the different threat models described above, it is necessary to assume that aircraft receivers have specific characteristics. If no such constraints were assumed, the complexity of the ground monitor would be unnecessarily high. Evolution in the technology may lead to improved detection capability in the aircraft receiver and may alleviate the current constraints.

8.11.1 For double-delta correlators, the aircraft receiver tracks the strongest correlation peak over the full code sequence for every ranging source used in the navigation solution.

8.11.2 For double-delta correlators, the precorrelation filter rolls off by at least 30 dB per octave in the transition band. For GBAS receivers, the resulting attenuation in the stop band is required to be greater than or equal to 50 dB (relative to the peak gain in the pass band).

8.11.3 The following parameters are used to describe the tracking performance specific to each type of satellite:

a) the instantaneous correlator spacing is defined as the spacing between a particular set of early and late samples of the correlation function;

b) the average correlator spacing is defined as a one-second average of the instantaneous correlator spacing. The average applies over any one-second time frame;

c) the discriminator Δ is based upon an average of early-minus-late samples with spacings inside the specified range, or is of the type $\Delta = 2\Delta_{d1} - \Delta_{2d1}$, with both d_1 and $2d_1$ in the specified range. Either a coherent or non-coherent discriminator is used;

d) the differential group delay applies to the entire aircraft system prior to the correlator, including the antenna. The differential group delay is defined as:

$$\left|\frac{d\phi}{d\omega}(f_c) - \frac{d\phi}{d\omega}(f)\right|$$

where

f_c is the precorrelation band pass filter centre frequency;

f is any frequency within the 3dB bandwidth of the precorrelation filter;

ϕ is the combined phase response of precorrelation band pass filter and antenna; and

ω is equal to $2\pi f$.

8.11.4 For aircraft receivers supporting single-frequency L1 using early-late correlators and tracking GPS L1 C/A satellites signal, the precorrelation bandwidth of the installation, the correlator spacing and the differential group delay are within the ranges defined in Table D-20, except as noted below.

8.11.4.1 For GBAS airborne equipment using early-late correlators and tracking GPS L1 C/A satellites signal, the precorrelation bandwidth of the installation, the correlator spacing and the differential group delay (including the contribution of the antenna) are within the ranges defined in Table D-20, except that the region 1 minimum bandwidth will increase to 4 MHz and the average correlator spacing is reduced to an average of 0.21 chips or instantaneous of 0.235 chips.

8.11.4.2 For GBAS airborne equipment class D (GAEC D) receivers using early-late correlators and tracking GPS satellites, the precorrelation bandwidth of the installation, the correlator spacing and the differential group delay are within the ranges defined in Table D-20, regions 2, 3 or 4 only. In addition, in region 2 the range of average correlator spacing is 0.045 – 0.12 chips, and the instantaneous correlator spacing is 0.04 – 0.15 chips.

8.11.4.3 For SBAS airborne equipment using early-late correlators and tracking GPS L1 C/A satellites signal, the precorrelation bandwidth of the installation, the correlator spacing and the differential group delay (including the contribution of the antenna) are within the ranges of the first three regions defined in Table D-20 for L1 signal.

8.11.5 For aircraft receivers supporting single-frequency L1 using early-late correlators and tracking GLONASS satellites, the precorrelation bandwidth of the installation, the correlator spacing, and the differential group delay are within the ranges as defined in Table D-21.

8.11.5.1 For GBAS airborne equipment class D (GAEC D) aircraft receivers using early-late correlators and tracking GLONASS satellites, the precorrelation bandwidth of the installation, the correlator spacing, and the differential group delay are within the ranges as defined in Table D-21, regions 2 and 3 only. In addition, in region 2 the range of average correlator spacing is 0.05 – 0.1 chips, and the instantaneous correlator spacing is 0.045 – 0.11 chips.

8.11.6 For aircraft receivers supporting single-frequency L1 using double-delta correlators and tracking GPS L1 C/A satellites signal, the precorrelation bandwidth of the installation, the correlator spacing and the differential group delay are within the ranges defined in Tables D-22 and D-25.

8.11.6.1 For GBAS airborne equipment class D (GAEC D) receivers using double-delta correlators and tracking GPS satellites, the precorrelation bandwidth of the installation, the correlator spacing and the differential group delay are within the ranges defined in Table D-25, regions 2 and 3 only.

8.11.7 For aircraft receivers supporting single-frequency L1 and using the early-late or double-delta correlators and tracking SBAS L1 satellites, the precorrelation bandwidth of the installation, the correlator spacing and the differential group delay are within the ranges defined in Table D-26.

8.11.7.1 For GBAS airborne equipment class D (GAEC D) receivers using the early-late or double-delta correlators and tracking SBAS satellites, the precorrelation bandwidth of the installation, the correlator spacing and the differential group delay are within the ranges defined in Table D-26, region 2 only. In addition, for GAEC D receivers using early-late correlators and tracking SBAS satellites, the average correlator spacing is 0.045 – 0.12 chips, and the instantaneous correlator spacing is 0.04 – 0.15 chips.

8.11.8 For aircraft receivers designed for DFMC SBAS, the L5 (or L3) signal tracking precorrelation bandwidth of the installation, the correlator spacing and the differential group delay are within the ranges defined in Table D-23 using the early-late correlators and tracking the GPS, Galileo, GLONASS, BDS or SBAS L5 signals identified in Attachment B, 3.5.11.1.

8.11.9 For aircraft receivers designed for DFMC SBAS, the L1 signal tracking precorrelation bandwidth of the installation, the correlator spacing and the differential group delay are within the ranges defined in Table D-24 using the early-late correlators and tracking the GPS, Galileo, GLONASS, BDS or SBAS L1 signals identified in Attachment B, 3.5.11.1.

8.11.10 The instantaneous correlator spacing may be larger than the average correlator spacing range provided in Table D-23 and Table D-24 accounting for noise or jitter in the correlator spacing.

9. STATUS MONITORING AND NOTAM

9.1 System status

9.1.1 Degradation of GBAS usually has local effects and affects mainly approach operations. System degradation of GBAS is to be distributed as approach-related information.

9.1.2 Degradation of core satellite constellation(s) or SBAS can be limited to local effects affecting mainly approach operations, but can also impact a wider area, and may directly affect en-route operations in the SBAS service area(s). System degradation impacting en-route or wider area SBAS operations is to be distributed as area-related information. An example is an ionosphere storm that removes all vertically-guided approach capability. System degradation impacting limited approaches can be distributed as approach-related information.

9.1.3 Degradation of GRAS may have local effects and/or wide area effects. Therefore, if the degradation has only local effects, GRAS system degradation information is to be distributed in accordance with 9.1.1. If the degradation has wide area effects, GRAS system degradation information is to be distributed in accordance with 9.1.2.

9.1.4 Information is to be distributed to indicate the inability of GNSS to support a defined operation. For example, GPS/SBAS may not support a precision approach operation on a particular approach. This information can be generated automatically or manually based upon models of system performance.

Table D-20. GPS tracking constraints for early-late correlators

Region	*3 dB precorrelation bandwidth, BW*	*Average correlator spacing (chips)*	*Instantaneous correlator spacing (chips)*	*Differential group delay*
1	2 < BW ≤ 7 MHz	0.045 – 1.1	0.04 – 1.2	≤ 600 ns
2	7 < BW ≤ 16 MHz	0.045 – 0.21	0.04 – 0.235	≤ 150 ns
3	16 < BW ≤ 20 MHz	0.045 – 0.12	0.04 – 0.15	≤ 150 ns
4	20 < BW ≤ 24 MHz	0.08 – 0.12	0.07 – 0.13	≤ 150 ns

Table D-21. GLONASS tracking constraints for early-late correlators

Region	*3 dB precorrelation bandwidth, BW*	*Average correlator spacing range (chips)*	*Instantaneous correlator spacing range (chips)*	*Differential group delay*
1	7 < BW ≤ 9 MHz	0.05 – 1.0	0.045 – 1.1	≤ 100 ns
2	9 < BW ≤ 15 MHz	0.05 – 0.2	0.045 – 0.22	≤ 100 ns
3	15 < BW ≤ 18 MHz	0.05 – 0.1	0.045 – 0.11	≤ 100 ns

Table D-22. GPS tracking constraints for GRAS and SBAS airborne receivers with double-delta correlators

Region	*3 dB precorrelation bandwidth, BW*	*Average correlator spacing (X) (chips)*	*Instantaneous correlator spacing (chips)*	*Differential group delay*
1	$(-50 \times X) + 12 < BW \leq 7$ MHz	0.1 – 0.16	0.09 – 0.18	≤ 600 ns
	$4 < BW \leq 7$ MHz	0.16 – 0.6	0.14 – 0.65	
2	$(-50 \times X) + 12 < BW \leq (40 \times X) + 11.2$ MHz	0.045 – 0.07	0.04 – 0.077	≤ 150 ns
	$(-50 \times X) + 12 < BW \leq 14$ MHz	0.07 – 0.1	0.062 – 0.11	
	$7 < BW \leq 14$ MHz	0.1 – 0.24	0.09 – 0.26	
3	$14 < BW \leq (133.33 \times X) + 2.667$ MHz	0.07 – 0.24	0.06 – 0.26	≤ 150 ns

Table D-23. DFMC SBAS tracking constraints for early-late correlators tracking the L5, E5a or L3OC signals

Region	*3 dB precorrelation bandwidth, BW*	*Average correlator spacing (chips)*	*Differential group delay*
1	$12 < BW \leq 24$ MHz	0.9 – 1.1	≤ 150 ns

Table D-24. DFMC SBAS tracking constraints for early-late correlators tracking the L1, E1 or L1OC signals

Region	*3 dB precorrelation bandwidth, BW*	*Average correlator spacing (chips)*	*Differential group delay*
1	$12 < BW \leq 24$ MHz	0.08 – 0.12	≤ 150 ns

Table D-25. GPS tracking constraints for GBAS airborne receivers with double-delta correlators

Region	*3 dB precorrelation bandwidth, BW*	*Average correlator spacing range (X) (chips)*	*Instantaneous correlator spacing range (chips)*	*Differential group delay*
1	$(-50 \times X) + 12 < BW \leq 7$ MHz	0.1 – 0.16	0.09 – 0.18	≤ 600 ns
	$4 < BW \leq 7$ MHz	0.16 – 0.6	0.14 – 0.65	
2	$(-50 \times X) + 12 < BW \leq (133.33 \times X) + 2.667$ MHz	0.07 – 0.085	0.063 – 0.094	≤ 150 ns
	$(-50 \times X) + 12 < BW \leq 14$ MHz	0.085 – 0.1	0.077 – 0.11	
	$7 < BW \leq 14$ MHz	0.1 – 0.24	0.09 – 0.26	
3	$14 < BW \leq 16$ MHz	0.1 – 0.24	0.09 – 0.26	≤ 150 ns
	$14 < BW \leq (133.33 \times X) + 2.667$ MHz	0.085 – 0.1	0.077 – 0.11	

Table D-26. SBAS ranging function tracking constraints

Region	*3 dB precorrelation bandwidth, BW*	*Average correlator spacing (chips)*	*Instantaneous correlator spacing (chips)*	*Differential group delay*
1	$2 < BW \leq 7$ MHz	0.045 – 1.1	0.04 – 1.2	≤ 600 ns
2	$7 < BW \leq 20$ MHz	0.045 – 1.1	0.04 – 1.2	≤ 150 ns

9.2 Information on type of degradation

The following information is to be distributed:

a) non-availability of service;

b) downgrade of service, if applicable; and

c) time and expected duration of degradation.

9.3 Timing of notification

For scheduled events, notification should be given to the NOTAM authority at least 72 hours prior to the event. For unscheduled events, notification to the NOTAM authority should be given within 15 minutes. Notification should be given for events of 15-minute, or longer, duration.

10. INTERFERENCE

10.1 Potential for interference

Satellite radio navigation systems such as GPS, GLONASS, Galileo and BDS feature relatively weak received signal power, meaning that an interference signal could cause loss of service. In order to maintain service, it will be necessary to ensure that the maximum interference levels specified in the SARPs are not exceeded.

10.2 In-band interference sources

A potential source of in-band harmful interference is Fixed Service operation in certain States. There is a primary allocation to the fixed service for point-to-point microwave links in certain States in the frequency band used by GPS, GLONASS, Galileo and BDS.

10.3 Out-of-band interference sources

Potential sources of out-of-band interference include harmonics and spurious emissions of aeronautical VHF and UHF transmitters. Out-of-band noise, discrete spurious products and intermodulation products from radio and TV broadcasts can also cause interference problems.

10.4 Aircraft generated sources

10.4.1 The potential for harmful interference to GPS, GLONASS, Galileo and BDS on an aircraft depends on the type of aircraft, its size and the transmitting equipment installed. The GNSS antenna location should take into account the possibility of on-board interference (mainly SATCOM).

10.4.2 GNSS receivers that are used on board aircraft with SATCOM equipment must have a higher interference threshold in the frequency range between 1 610 MHz and 1 626.5 MHz than receivers on board aircraft without SATCOM equipment. Therefore, specifications for the interference threshold discriminate between both cases.

Note.— Limits for radiated SATCOM aircraft earth stations are given in Annex 10, Volume III, Part I, Chapter 4, 4.2.3.5.

10.4.3 The principal mitigation techniques for on-board interference include shielding, filtering, receiver design techniques, and, especially on larger aircraft, physical separation of antennas, transmitters and cabling. Receiver design techniques include the use of adaptive filters and interference cancellation techniques that mitigate against narrow in-band interference. Antenna design techniques include adaptive null steering antennas that reduce the antenna gain in the direction of interference sources without reducing the signal power from satellites.

10.5 Integrity in the presence of interference

The requirement that GNSS receivers do not output misleading information in the presence of interference is intended to prevent the output of misleading information under unintentional interference scenarios that could arise. It is not intended to specifically address intentional interference. While it is impossible to completely verify this requirement through testing, an acceptable means of compliance can be found in the appropriate receiver Minimum Operational Performance Standards published by RTCA and EUROCAE.

11. RECORDING OF GNSS PARAMETERS

11.1 In order to be able to conduct post-incident/accident investigations (Chapter 2, 2.1.4.2 and 2.1.4.3), it is necessary to record GNSS information both for the augmentation system and for the appropriate GNSS core system constellation used for the operation. The parameters to be recorded are dependent on the type of operation, augmentation system and core elements used. All parameters available to users within a given service area should be recorded at representative locations in the service area.

11.2 The objective is not to provide independent assurance that the GNSS is functioning correctly, nor is it to provide another level of system monitoring for anomalous performance or input data for a NOTAM process. The recording system need not be independent of the GNSS service and may be delegated to other States or entities. In order to enable future reconstruction of position, velocity and time indications provided by specific GNSS configurations, it is recommended to log data continuously, generally at a 1 Hz rate.

11.3 For GNSS core systems the following monitored items should be recorded for all satellites in view:

a) observed satellite carrier-to-noise density (C/N_0);

b) observed satellite raw pseudo-range code and carrier phase measurements;

c) broadcast satellite navigation messages, for all satellites in view; and

d) relevant recording receiver status information.

11.4 For SBAS the following monitored items should be recorded for all SBAS satellites in view in addition to the GNSS core system monitored items listed above:

a) observed SBAS satellite carrier-to-noise density (C/N_0);

b) observed SBAS satellite raw pseudo-range code and carrier phase measurements;

c) broadcast SBAS data messages; and

d) relevant receiver status information.

11.5 For GBAS the following monitored items should be recorded in addition to the GNSS core system and SBAS monitored items listed above (where appropriate):

a) VDB power level;

b) VDB status information; and

c) broadcast GBAS data messages.

12. GNSS PERFORMANCE ASSESSMENT

12.1 GNSS performance assessment is a periodic offline activity that may be performed by a State or delegated entity, aiming to verify that GNSS performance parameters conform to the relevant Annex 10 Standards. This activity can be done for the core constellation, the augmentation system or a combination of both.

Note.— Additional guidance material on GNSS performance assessment is provided in the Global Navigation Satellite System (GNSS) Manual *(Doc 9849).*

12.2 The data described in section 11 may also support GNSS performance assessment .

13. GNSS AND DATABASE

Note.— Provisions relating to aeronautical data are contained in Annex 11, Chapter 2, and Annex 15, Chapter 3.

13.1 The database is to be current with respect to the effective AIRAC cycle, which generally means that a current database be loaded into the system approximately every 28 days. Operating with out-of-date navigation databases has to be avoided.

13.2 In certain situations, operations using an expired database can be conducted safely by implementing a process and/or using procedures to ensure that the required data is correct. These processes and/or procedures need prior approval by the State.

13.2.1 These procedures should be based on one of the following methods:

a) require the crew to check, prior to the operation, critical database information against current published information. (This method increases workload and would not be practical for all applications.); or

b) waive the requirement for a current database and frequent checks by the crew of the database information. This waiver can only be applied to very specific cases where aircraft are operated in a strictly limited geographical area and where that area is controlled by a single regulatory agency or multiple agencies that coordinate this process; or

c) use another approved method that ensures an equivalent level of safety.

14. MODELLING OF RESIDUAL ERRORS

14.1 Application of the integrity requirements for SBAS and GBAS requires that a model distribution be used to characterize the error characteristics in the pseudo-range. The HPL/LPL and VPL models (see 7.5.3) are constructed based on models of the individual error components (in the pseudo-range domain) that are independent, zero-mean, normal distributions. The relationship between this model and the true error distribution must be defined.

14.2 One method of ensuring that the protection level risk requirements are met is to define the model variance (σ^2), such that the cumulative error distribution satisfies the conditions:

$$\int_{y}^{\infty} f(x)dx \leq Q\left(\frac{y}{\sigma}\right) \text{ for all } \left(\frac{y}{\sigma}\right) \geq 0 \text{ and}$$

$$\int_{-\infty}^{-y} f(x)dx \leq Q\left(\frac{y}{\sigma}\right) \text{ for all } \left(\frac{y}{\sigma}\right) \geq 0 \text{ and}$$

where

f(x) = probability density function of the residual aircraft pseudo-range error component; and

$$Q(x) = \frac{1}{\sqrt{2\pi}} \int_{x}^{\infty} e^{-\frac{t^2}{2}} dt.$$

14.3 This method can be directly applied when the error components have zero-mean, symmetrical and unimodal probability density functions. This is the case for the receiver contribution to corrected pseudo-range error, since the aircraft element is not subjected to low-frequency residual multipath errors.

14.4 This method can be extended to address non-zero-mean, residual errors by inflating the model variance to compensate for the possible effect of the mean in the position domain.

14.5 Verification of the pseudo-range error models must consider a number of factors including:

a) the nature of the error components;

b) the sample size required for confidence in the data collection and estimation of each distribution;

c) the correlation time of the errors; and

d) the sensitivity of each distribution to geographic location and time.

Figure D-1. Reserved

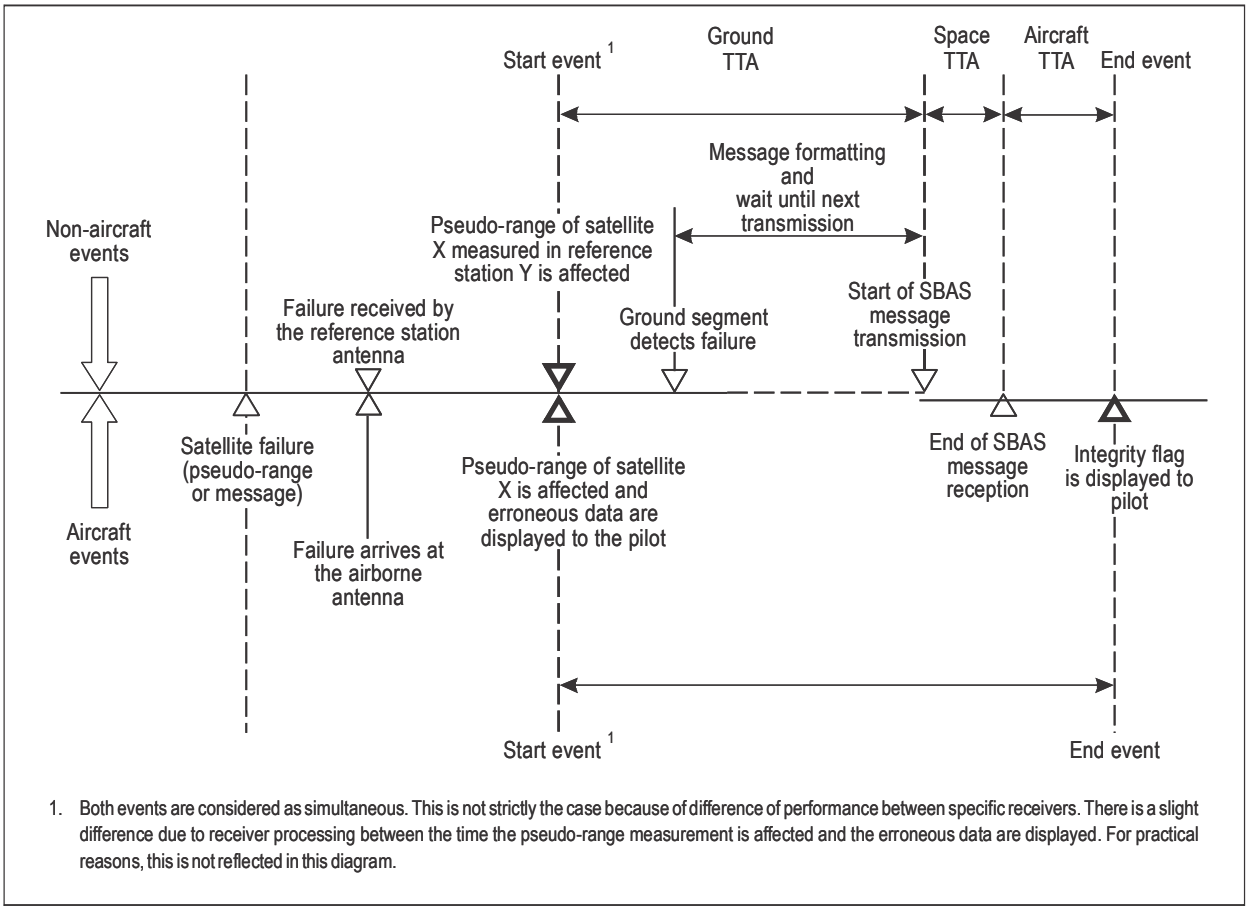

Figure D-2. SBAS time-to-alert

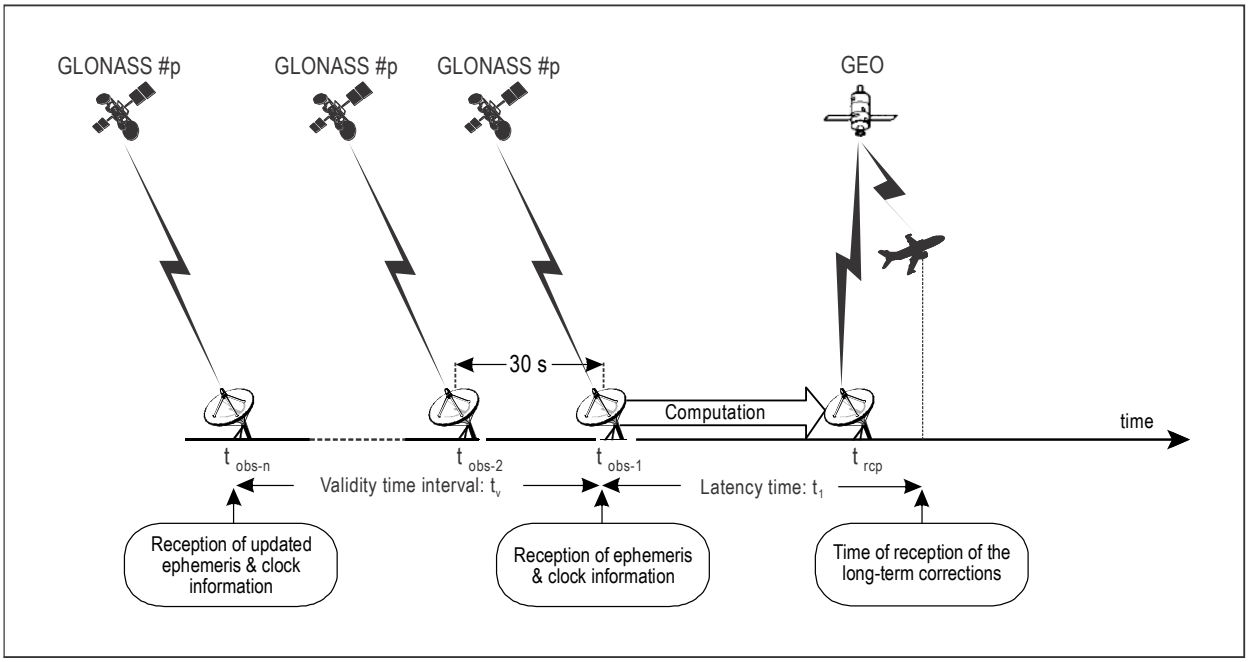

Figure D-3. GLONASS time

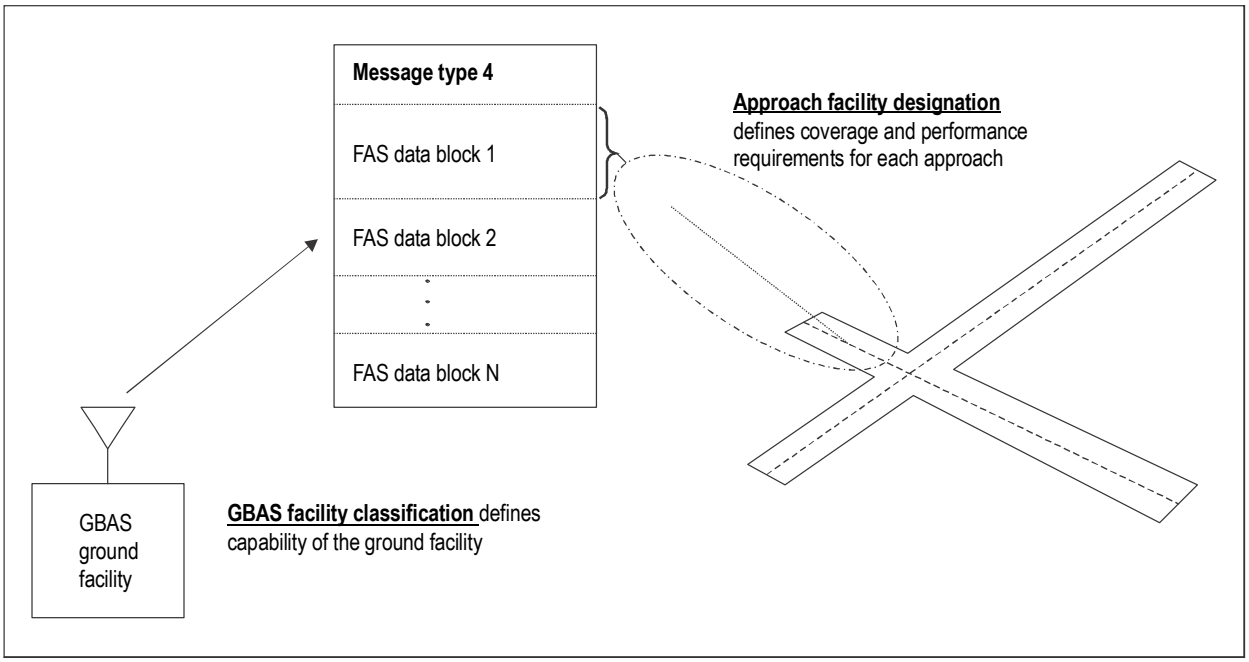

Figure D-4. Relationship between GBAS facility classification and approach facility designation

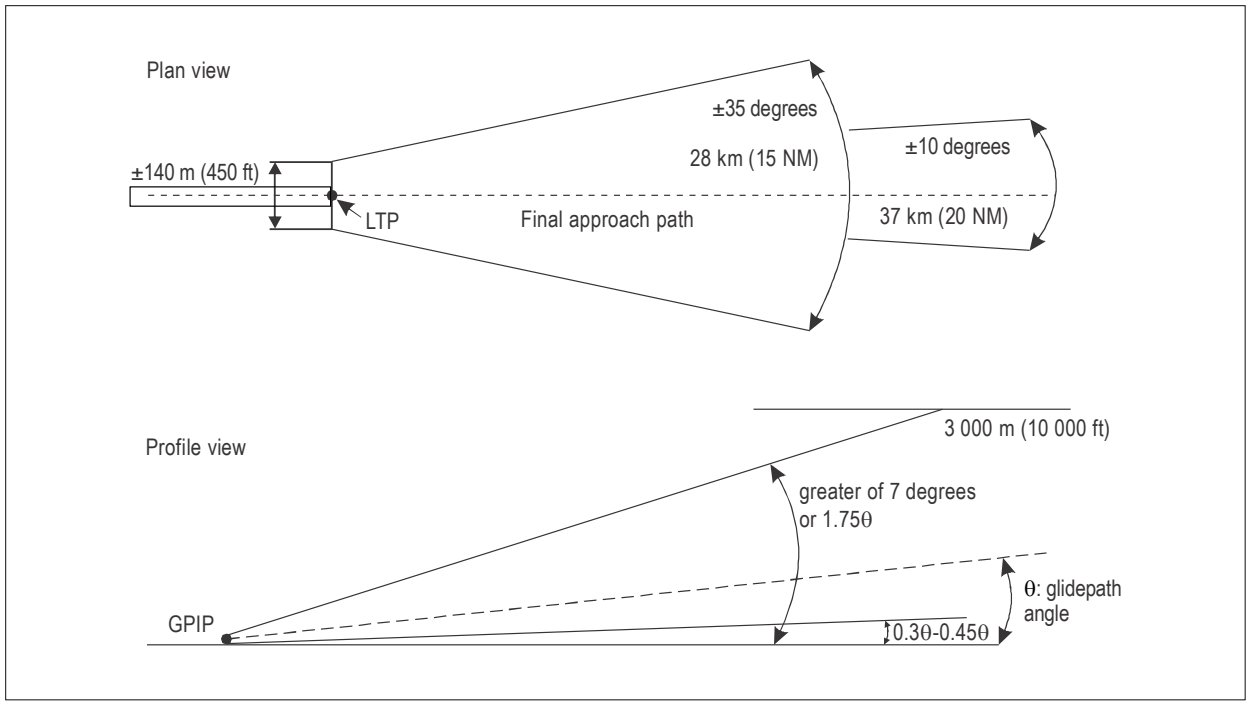

GPIP — glide path intersection point
LTP — landing threshold point

Figure D-5. Minimum GBAS service volume

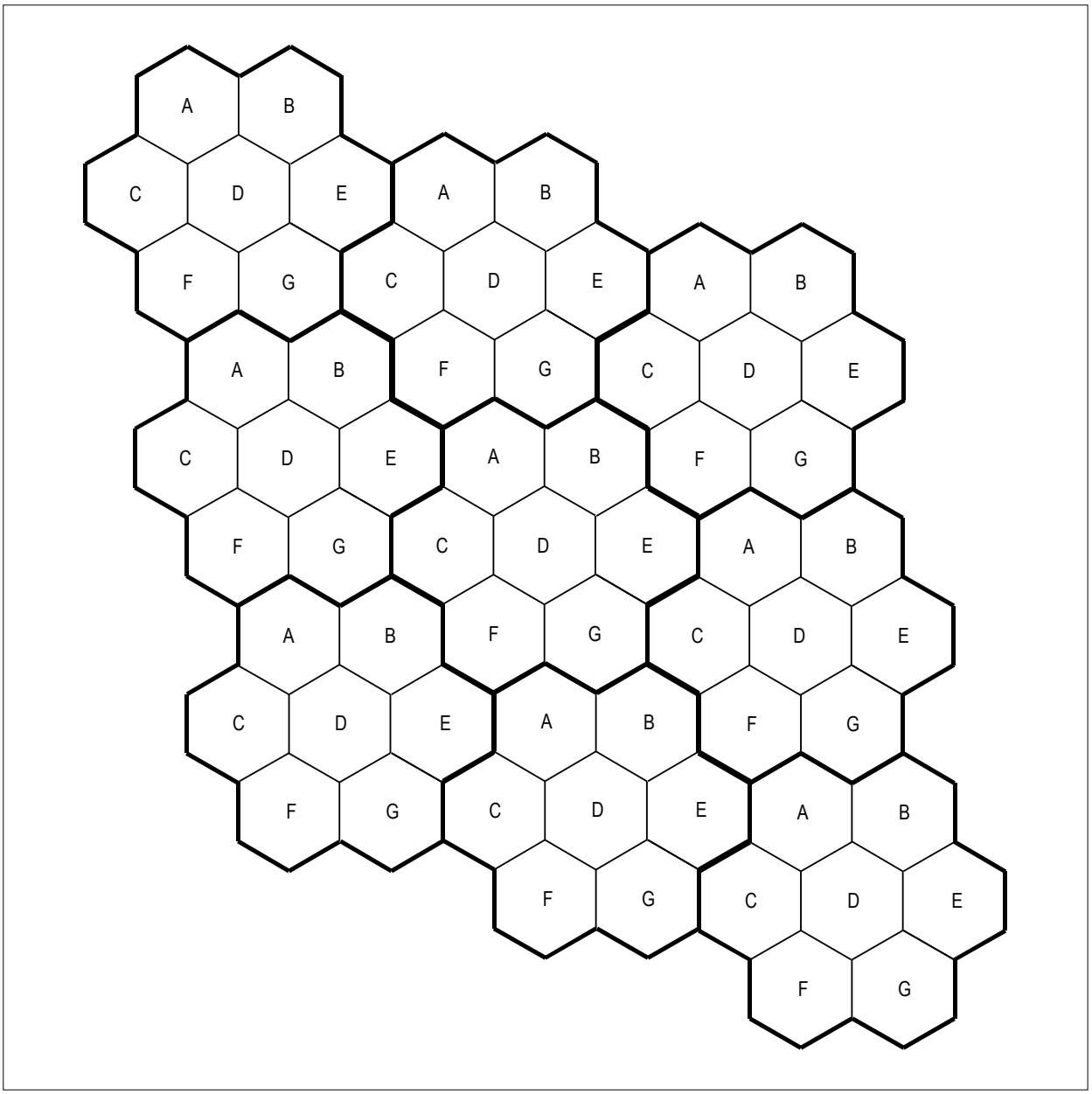

Figure D-5A. Single frequency GRAS VHF networking using multiple time slots

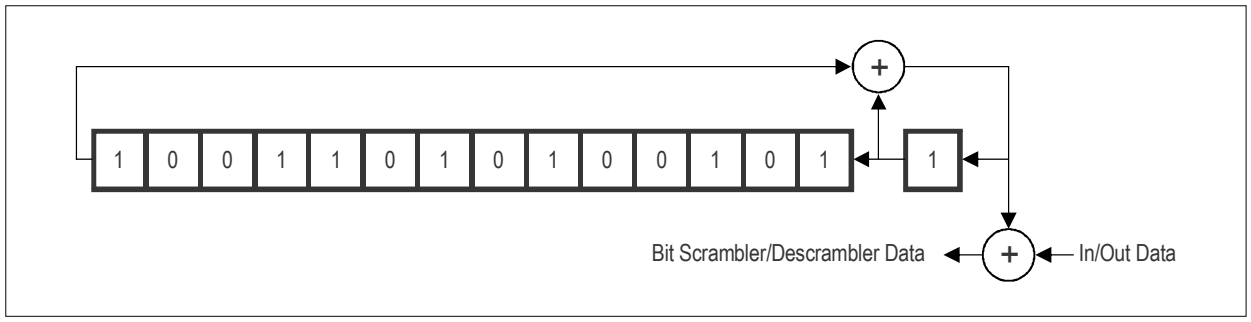

Figure D-6. Bit scrambler/descrambler

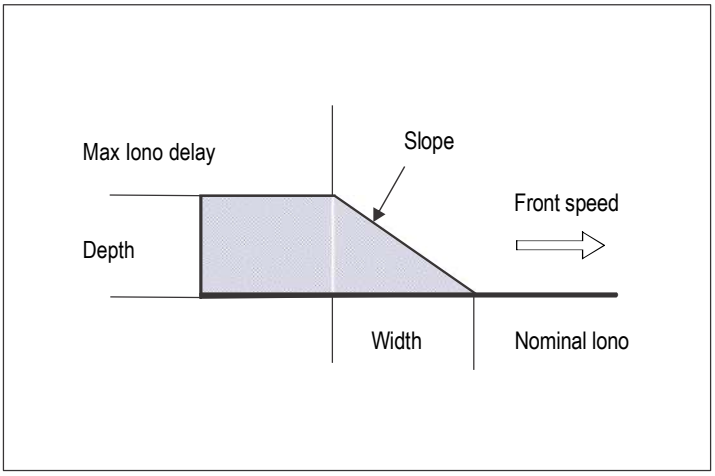

Figure D-7. Moving wedge ionospheric anomaly model

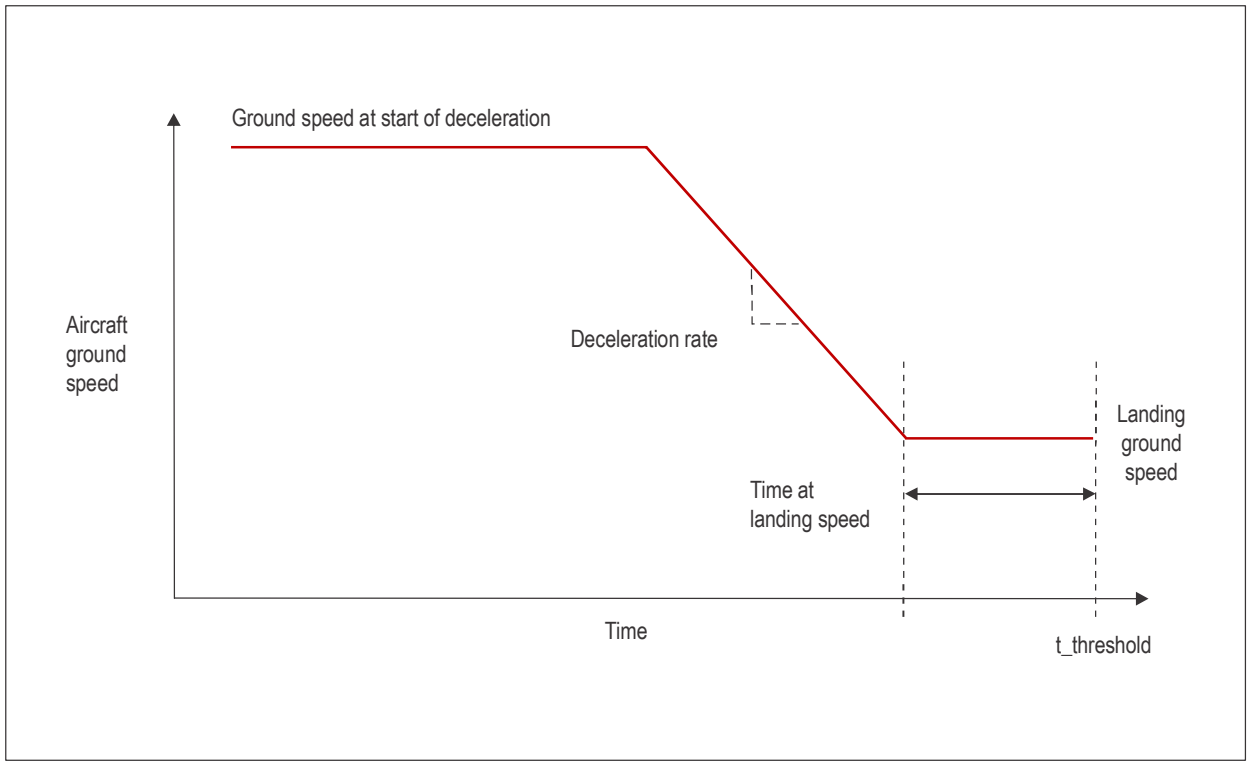

Figure D-8. Aircraft speed profile model

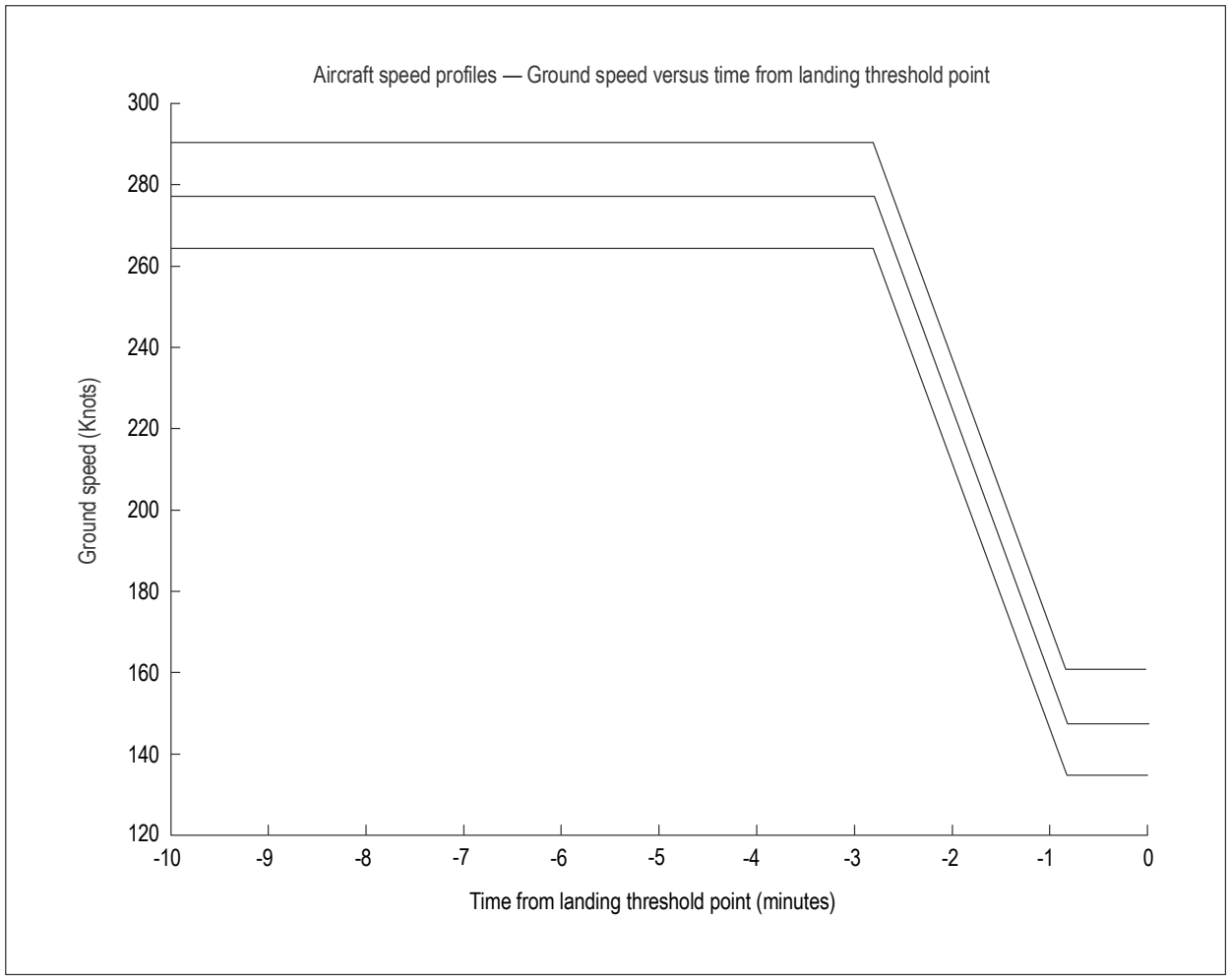

Figure D-9. Family of aircraft speed profiles

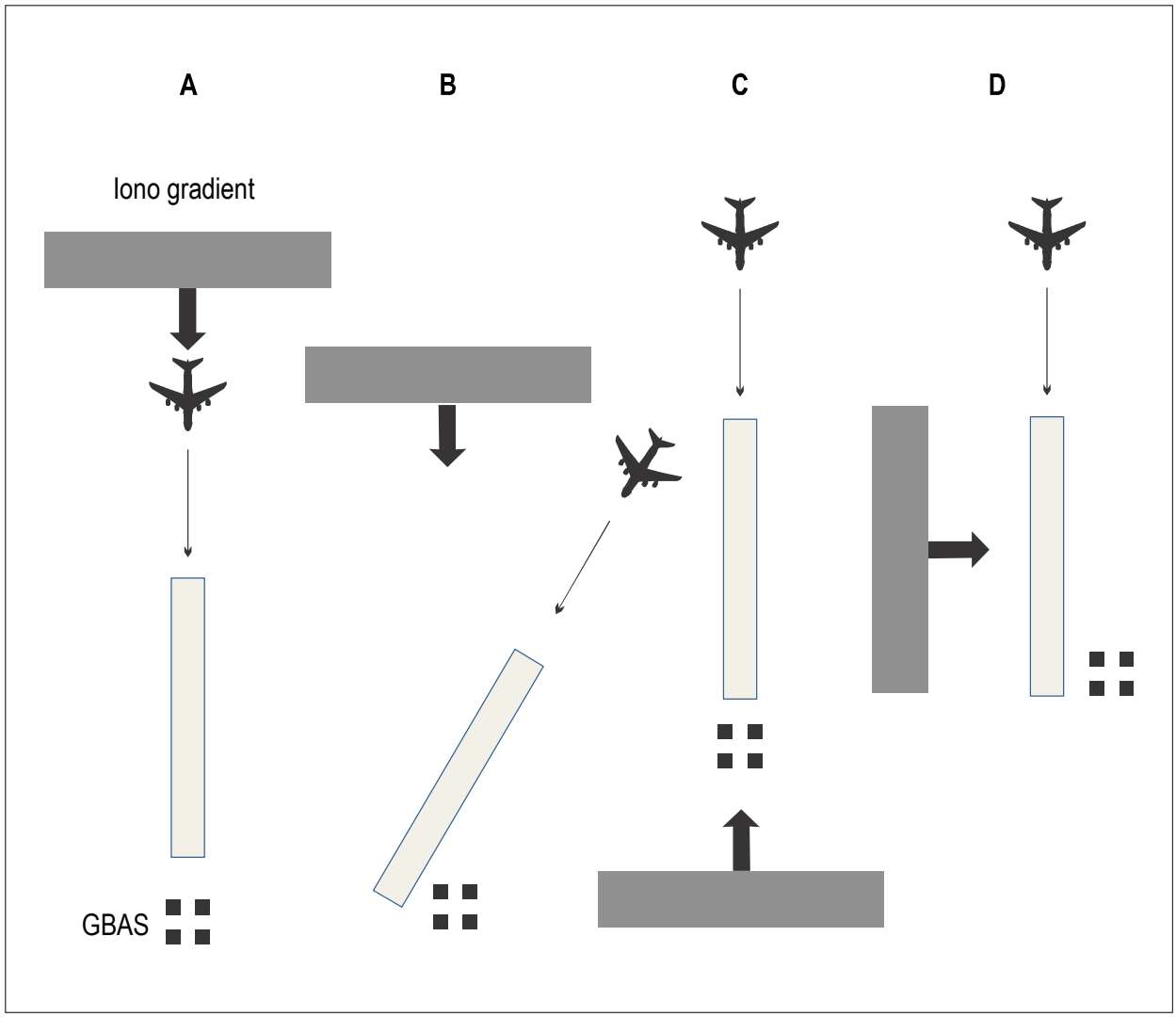

Figure D-10. Ionospheric gradient air/ground/approach orientations

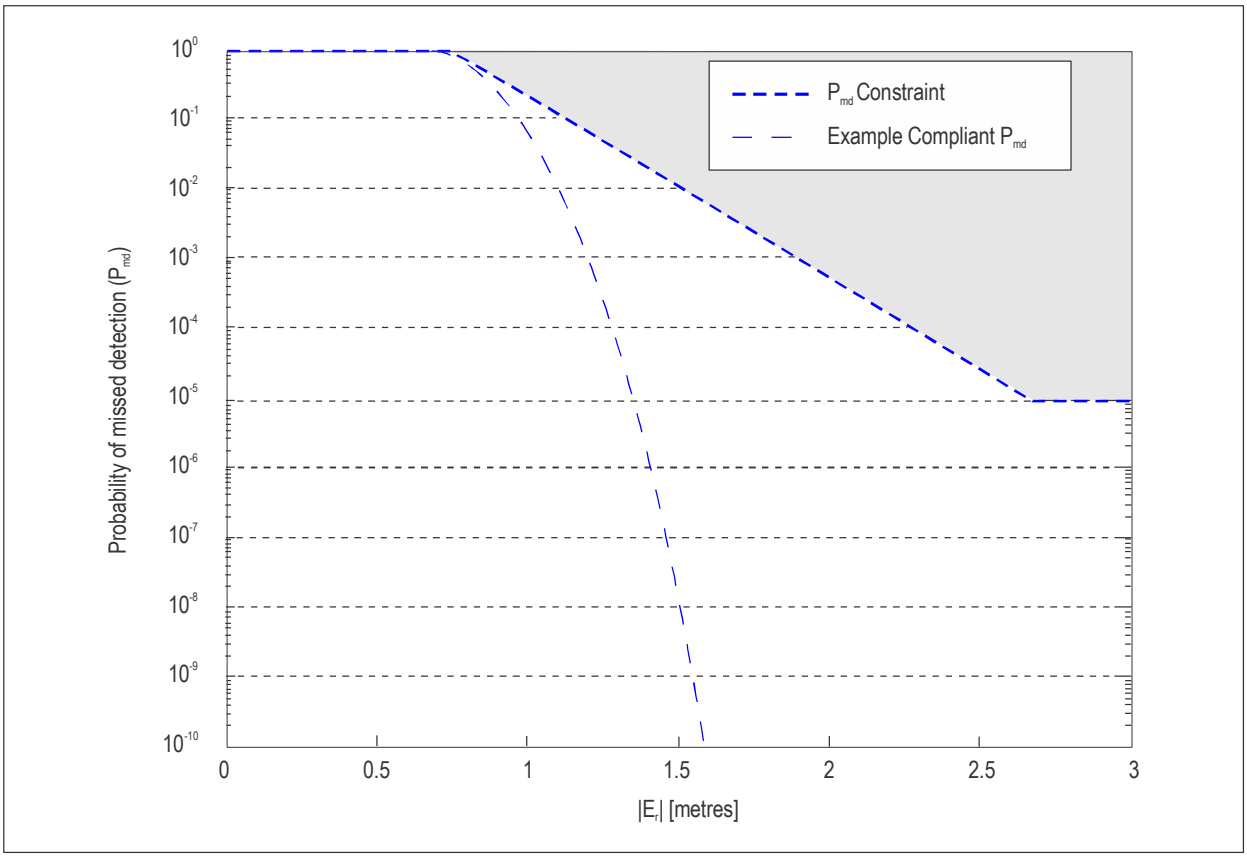

Figure D-11. Example P_{md_limit} constraint region

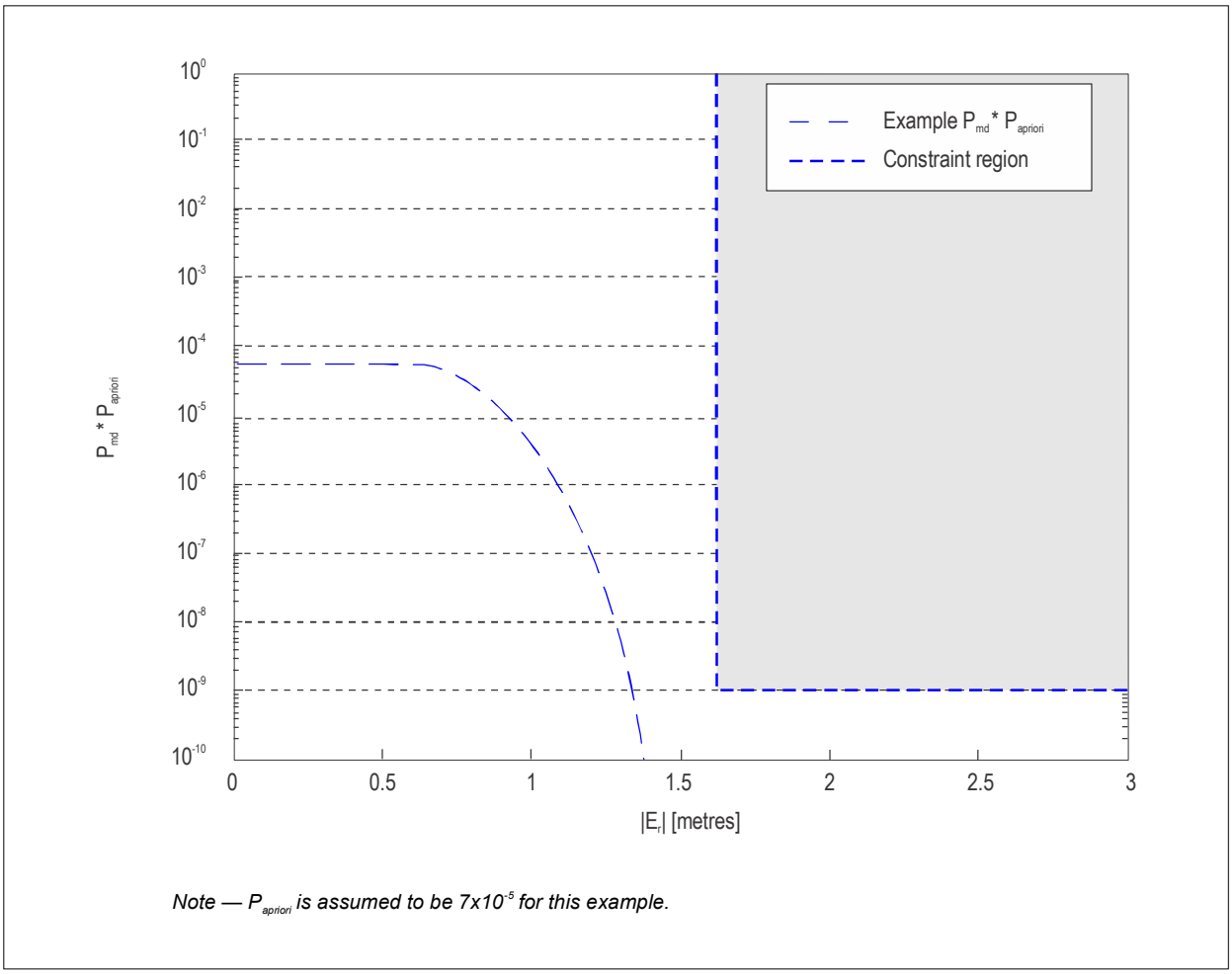

Figure D-12. Example P_{md_limit} constraint with a priori probability

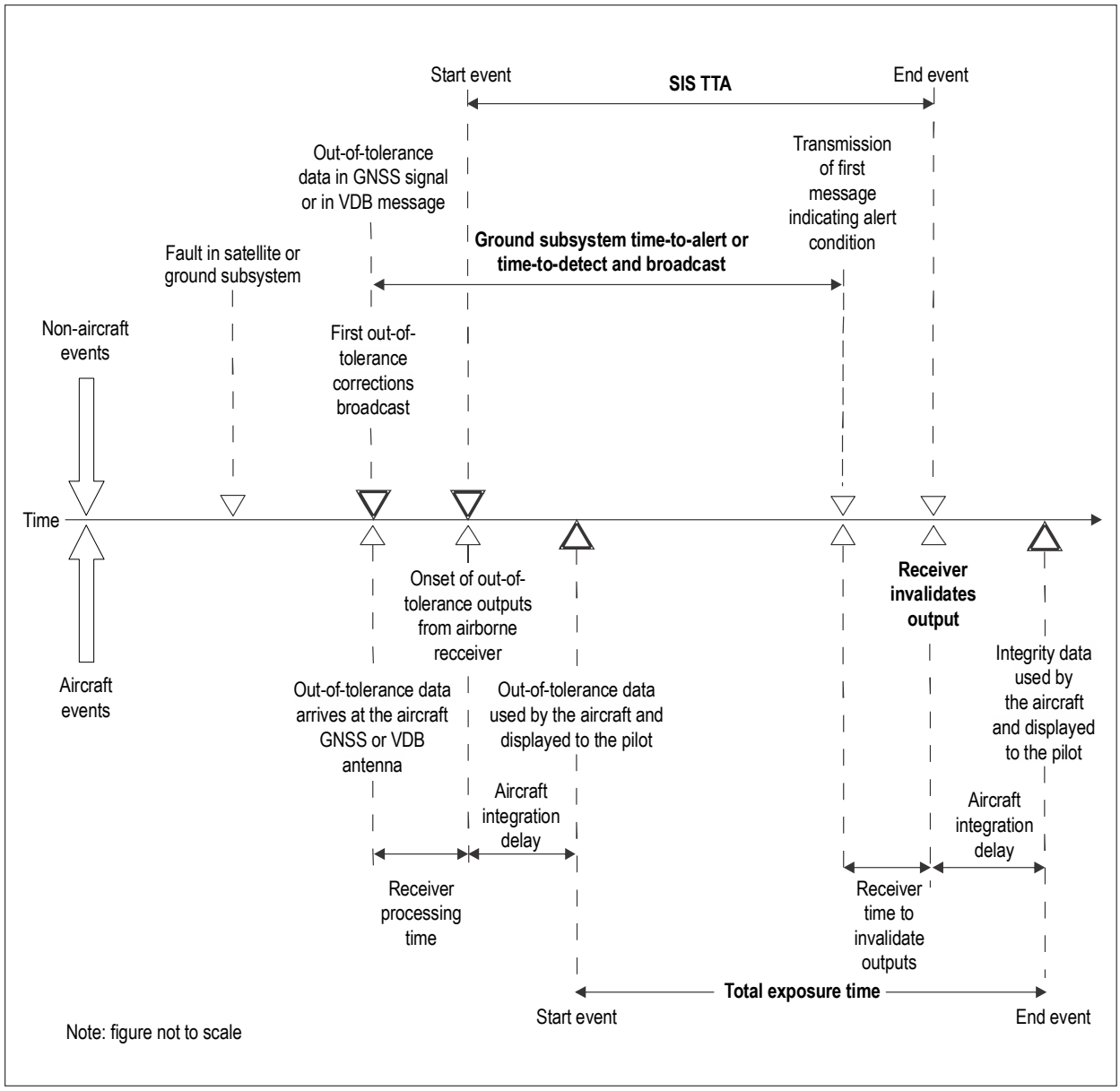

Figure D-13. Nominal GBAS time-to-alert illustration

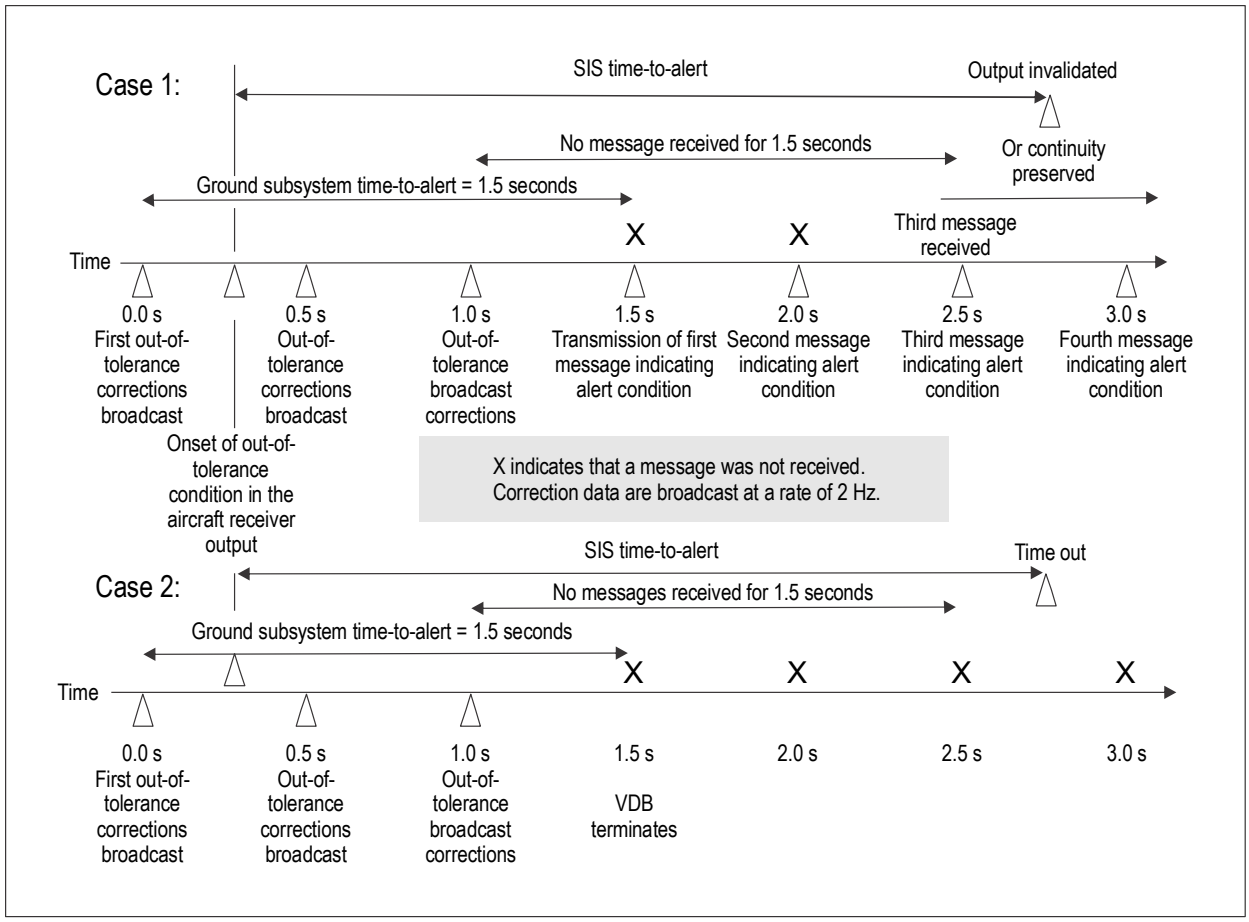

Figure D-14. Effect of missed messages on the GAST D GBAS time-to-alert below 200 ft Case 1 describes the situation for missed messages, Case 2 the one for VDB termination

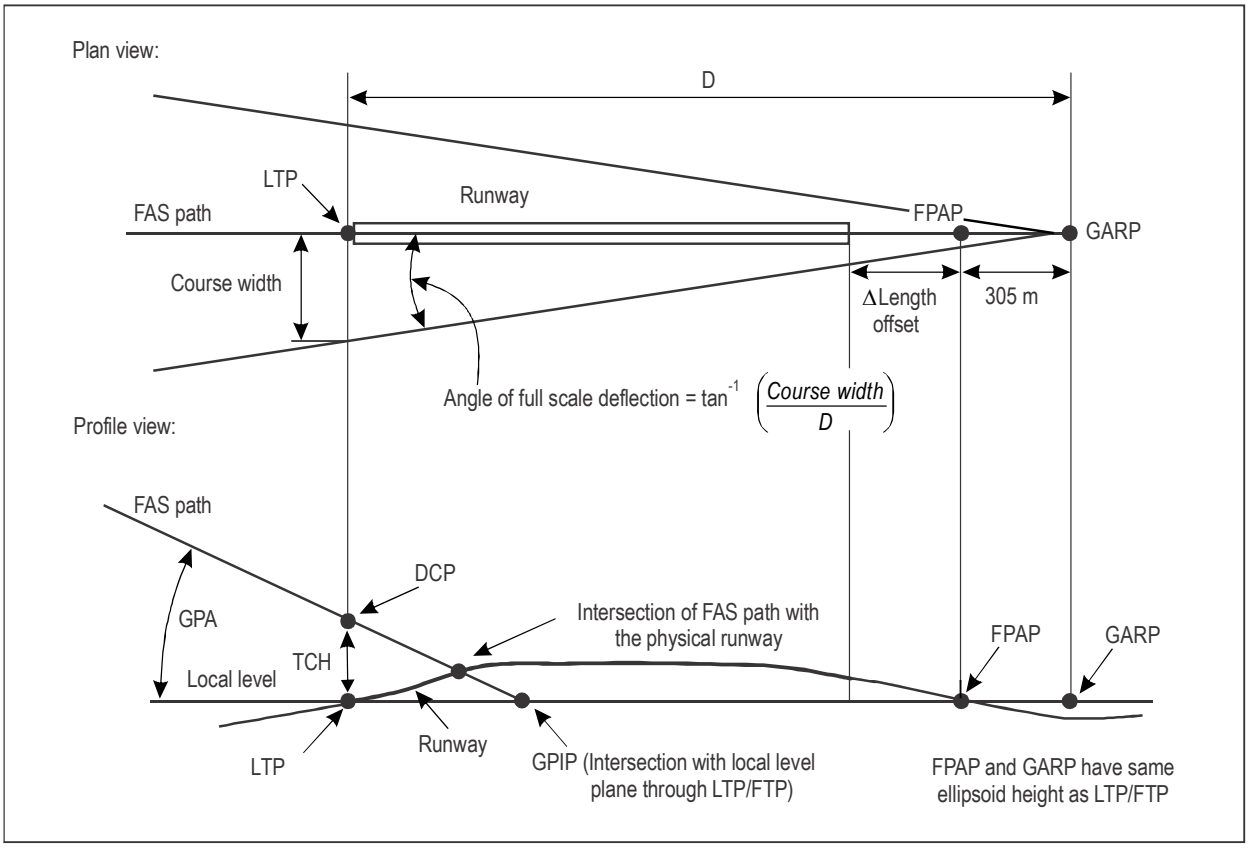

DCP — datum crossing point
FAS — final approach segment
FPAP — flight path alignment point
FTP — fictitious threshold point (see Figure D-7)
GARP — GNSS azimuth reference point
GPA — glide path angle
GPIP — glide path intersection point
LTP — landing threshold point
TCH — threshold crossing height

Figure D-15. FAS path definition

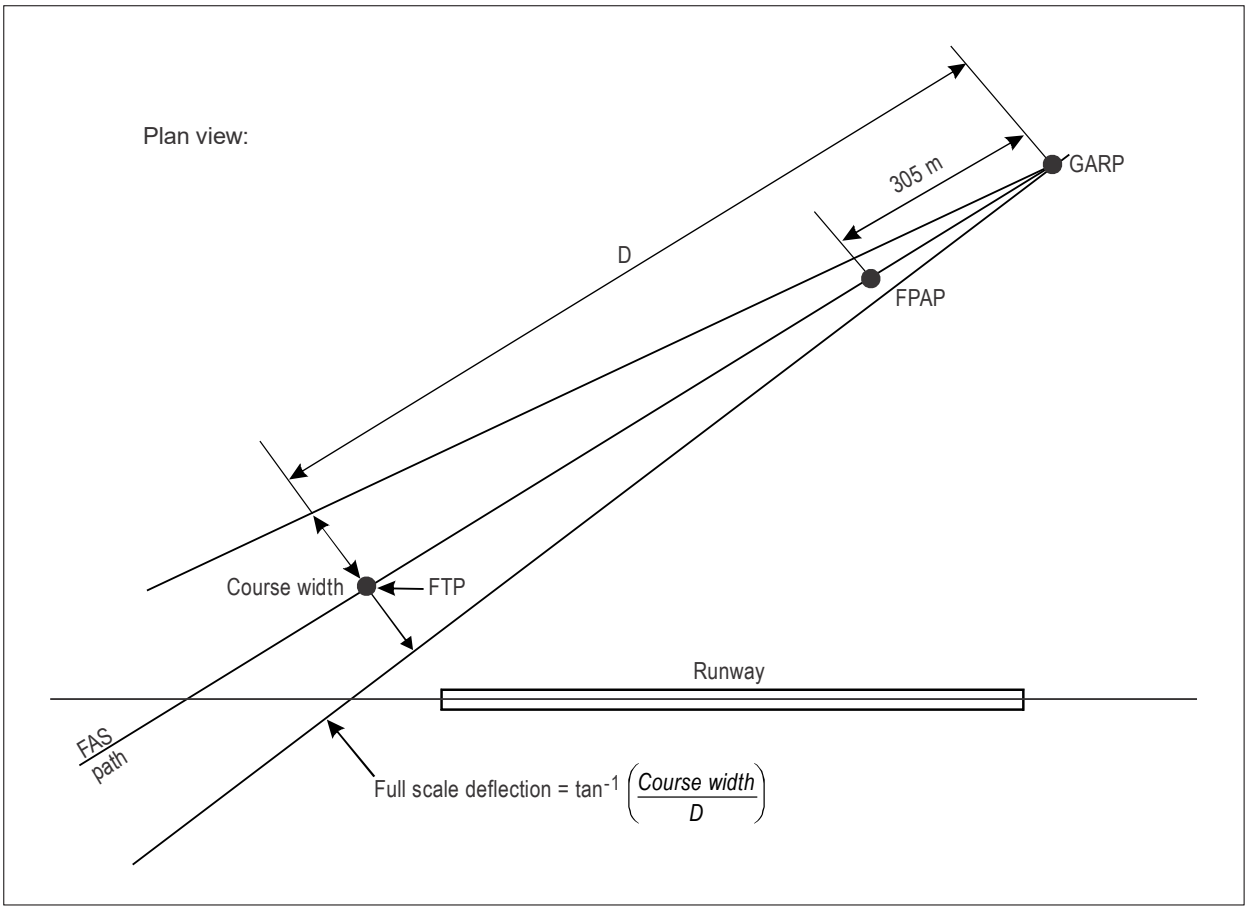

FAS — final approach segment
FPAP — flight path alignment point
FTP — fictitious threshold point
GARP — GNSS azimuth reference point

Figure D-16. FAS path definition for approaches not aligned with the runway

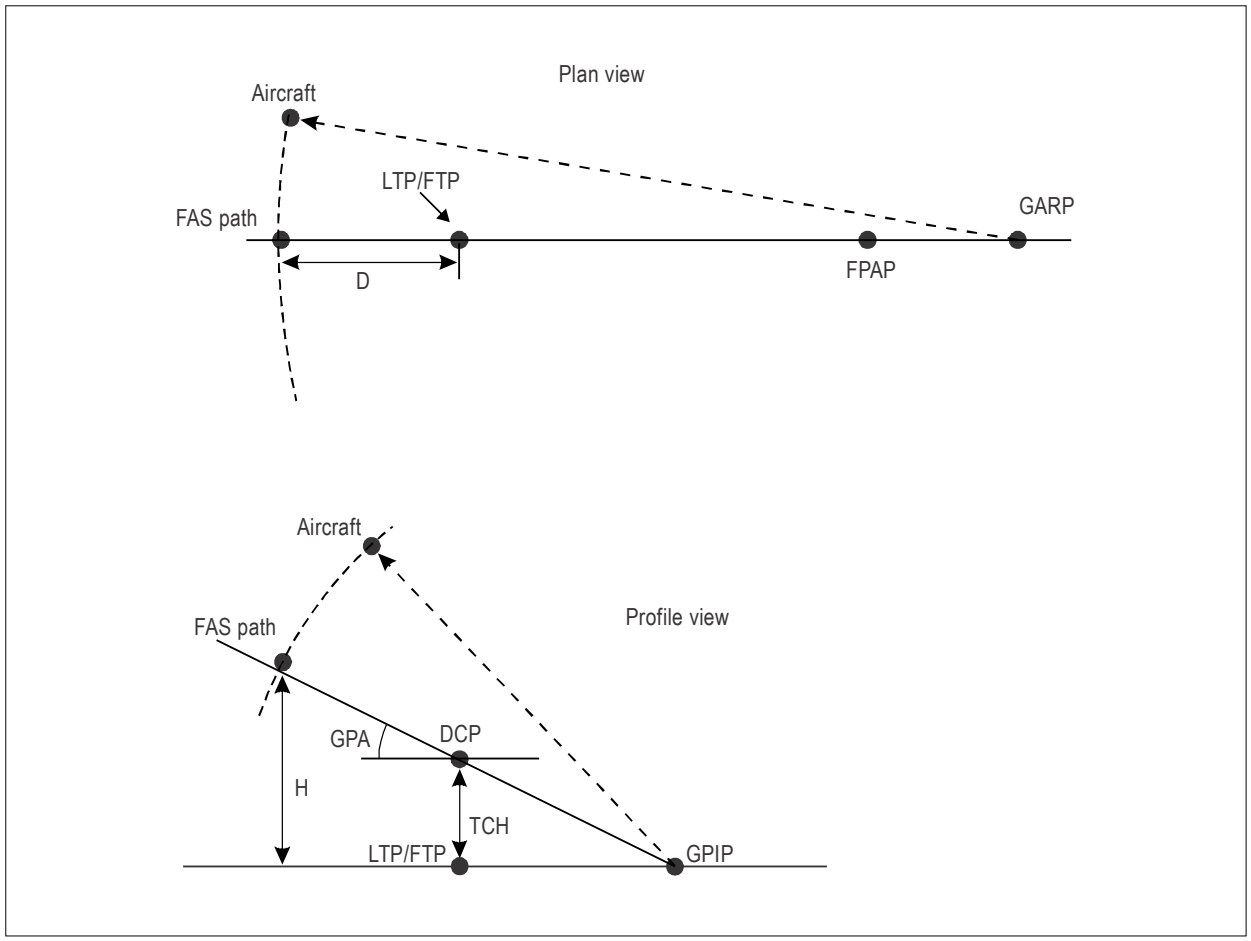

DCP — datum crossing point
FAS — final approach segment
FPAP — flight path alignment point
FTP — fictitious threshold point (see Figure D-7)
GARP — GNSS azimuth reference point
GPA — glide path angle
GPIP — glide path intersection point
LTP — landing threshold point
TCH — threshold crossing height

Figure D-17. Definition of D and H parameters in alert limit computations

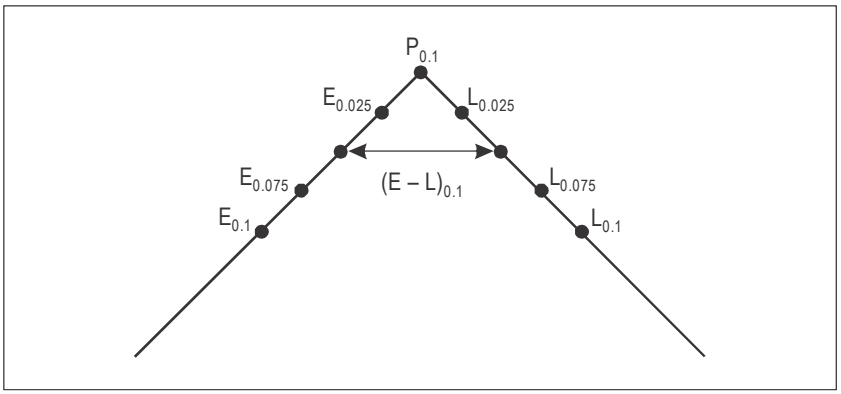

Figure D-18. "Close-in" correlation peak and measured correlator values

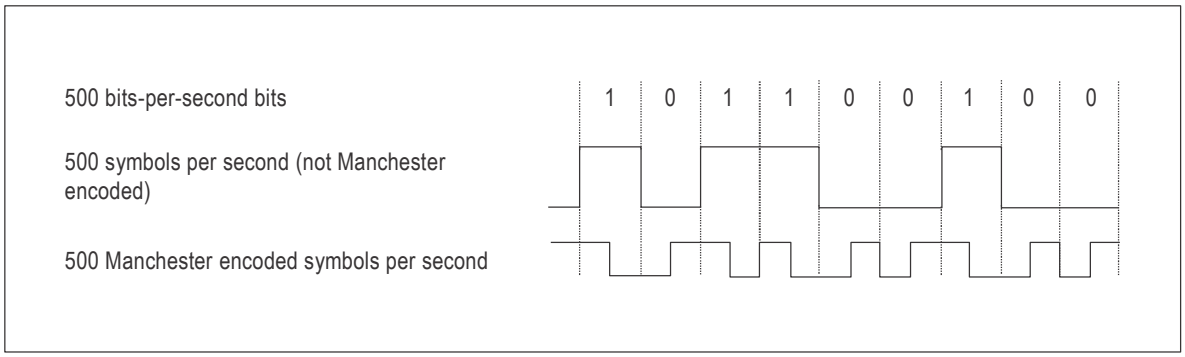

Figure D-19. Bi-binary (Manchester) encoding scheme

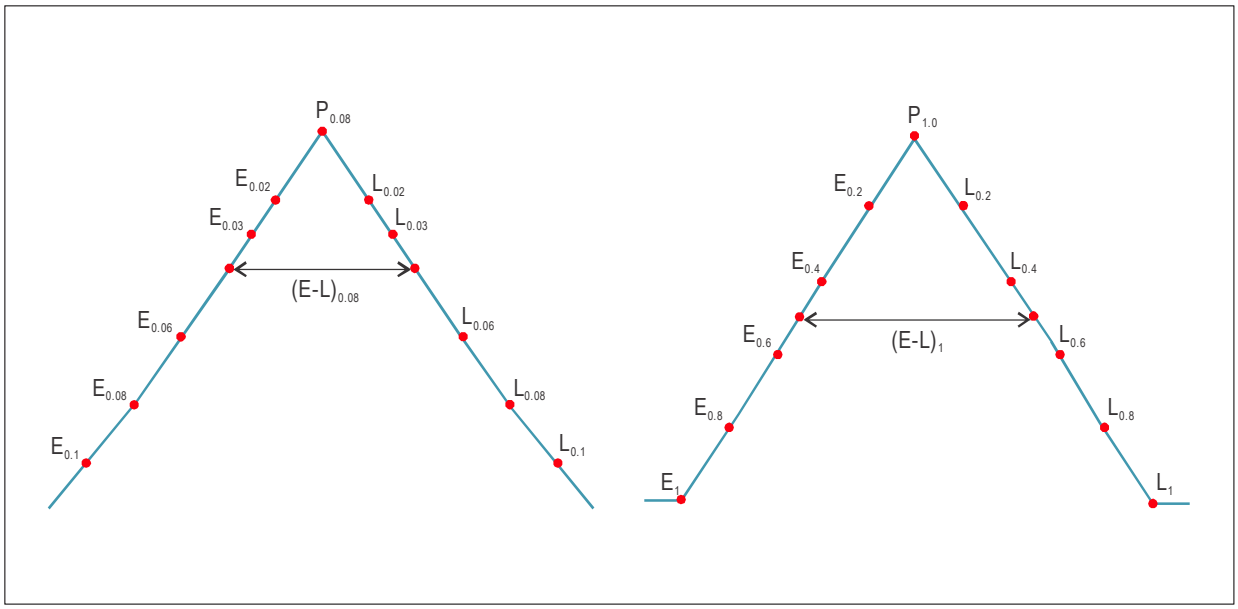

Figure D-20. Correlator outputs for Galileo E1-C or BDS B1C_pilot (left) and Galileo E5a-Q or BDS B2a_pilot (right)

ATTACHMENT E. GUIDANCE MATERIAL ON THE PRE-FLIGHT CHECKING OF VOR AIRBORNE EQUIPMENT

1. Specification for a VOR airborne equipment test facility (VOT)

1.1 Introduction

For the guidance of States wishing to provide a test signal for the pre-flight checking of VOR airborne equipment, suggested characteristics for a VOR airborne equipment test facility (VOT) are given hereafter.

1.2 General

1.2.1 The VOT must be designed to provide signals that will permit satisfactory operation of a typical VOR aircraft installation in those areas of the aerodrome where pre-flight checking is convenient and desirable.

1.2.2 The VOT must be constructed and adjusted so that the VOR bearing indicator in the aircraft will indicate zero degrees “FROM” when the receiver has not departed from calibration. This indication remains constant irrespective of the aircraft's angular position with respect to the VOT within the intended coverage.

1.2.3 In view of the manner in which use is made of a VOT, there is no fundamental need for its duplication at any one site.

1.2.4 The VOT is required to radiate a radio frequency carrier with which are associated two separate 30 Hz modulations. The characteristics of these modulations should be identical with the reference phase and variable phase signals associated with VOR. The phases of these modulations should be independent of azimuth and should be coincident with each other at all times.

1.3 Radio frequency

The VOT should operate in the band 108 to 117.975 MHz on an appropriate VOR channel selected so as not to interfere with any VHF navigation or communication services. The highest assignable frequency is 117.95 MHz. The frequency tolerance of the radio frequency carrier should be plus or minus 0.005 per cent, except as specified in Chapter 3, 3.3.2.2 and 3.3.2.3.

1.4 Polarization and accuracy

1.4.1 The emission from the VOT should be horizontally polarized.

1.4.2 The accuracy of the “bearing” information conveyed by the radiation from the VOT should be plus or minus 1 degree.

Note.— Since the two modulations on the radio frequency carrier are in phase coincidence at all times, the vestigial vertically polarized energy will have no effect on the accuracy of the facility.

1.5 Coverage

1.5.1 Coverage requirements, and hence the power which must be radiated, will necessarily depend to a considerable extent on local circumstances. For some installations, a small fraction of 1 W will suffice while in other cases, particularly if two or more closely adjacent aerodromes are to be served by a single test facility, several watts of radio frequency energy may need to be emitted.

1.5.2 Where there is a need to protect co-channel VORs, VOTs and ILS localizers from VOT interference, the radio emission must be limited to that required to provide satisfactory operation and to ensure that interference with other co-channel assignments does not occur.

1.6 Modulation

1.6.1 The radio frequency carrier as observed at any point in space should be amplitude modulated by two signals as follows:

a) a subcarrier of 9 960 Hz of constant amplitude, frequency modulated at 30 Hz and having a deviation ratio of 16 plus or minus 1 (i.e. 15 to 17);

b) 30 Hz.

1.6.2 The depth of modulation due to the 9 960 Hz and the 30 Hz signals should be within the limits of 28 per cent for each component.

1.6.3 The signal which frequency modulates the 9 960 Hz subcarrier and the signal which amplitude modulates the radio frequency carrier should both be maintained at 30 Hz within plus or minus 1 per cent.

1.6.4 The frequency of the 9 960 Hz subcarrier should be maintained within plus or minus 1 per cent.

1.6.5 The percentage of amplitude modulation on the 9 960 Hz subcarrier present at the output of the transmitter should not be greater than 5 per cent.

1.7 Identification

1.7.1 The VOT should transmit a 1 020 Hz identification signal. The identification code for a VOT installation should be selected by the competent authority so as to be unmistakably distinctive as to the test function and, if necessary, as to the location.

Note.— In one State, when the VOT coverage is confined to a single aerodrome, the identification consists of a continuous series of dots.

1.7.2 The depth to which the radio frequency carrier is modulated by the identification signal should be approximately 10 per cent.

1.8 Monitoring

1.8.1 Basically, there is no need for continuous automatic monitoring of VOT provided the relative phase of the AM and FM 30 Hz components are mechanically locked and facilities exist for periodic inspection and remote supervision of the state of the VOT.

1.8.2 Provision of automatic monitoring can double the cost of a VOT installation and, consequently, many competent authorities are likely to employ only remote supervision at a control point. However, where, in the light of the operational use to be made of a VOT, a State decides to provide automatic monitoring, the monitor should transmit a warning to a control point and cause a cessation of transmission if either of the following deviations from established conditions arises:

a) a change in excess of 1 degree at the monitor site of the "bearing" information transmitted by the VOT;

b) a reduction of 50 per cent in the signal level of the 9 960 Hz or 30 Hz signals at the monitor.

Failure of the monitor should automatically cause a cessation of transmission.

2. Selection and use of VOR aerodrome check-points

2.1 General

2.1.1 When a VOR is suitably located in relationship to an aerodrome, the pre-flight checking of an aircraft VOR installation can be facilitated by the provision of suitably calibrated and marked check-points at convenient parts of the aerodrome.

2.1.2 In view of the wide variation in circumstances encountered, it is not practicable to establish any standard requirements or practices for the selection of VOR aerodrome check-points. However, States wishing to provide this facility should be guided by the following considerations in selecting the points to be used.

2.2 Siting requirements for check-points

2.2.1 The signal strength of the nearby VOR has to be sufficient to ensure satisfactory operation of a typical aircraft VOR installation. In particular, full flag action (no flag showing) must be ensured.

2.2.2 The check-points should, within the limits of operating convenience, be located away from buildings or other reflecting objects (fixed or moving) which are likely to degrade the accuracy or stability of the VOR signal.

2.2.3 The observed VOR bearing at any selected point should ideally be within plus or minus 1.5 degrees of the bearing accurately determined by survey or chart plotting.

Note.— The figure of plus or minus 1.5 degrees has no direct operational significance in that the observed bearing becomes the published bearing; however, where a larger difference is observed, there is some possibility of poor stability.

2.2.4 The VOR information at a selected point should be used operationally only if found to be consistently within plus or minus 2 degrees of the published bearing. The stability of the VOR information at a selected point should be checked periodically with a calibrated receiver to ensure that the plus or minus 2-degree tolerance is satisfied, irrespective of the orientation of the VOR receiving antenna.

Note.— The tolerance of plus or minus 2 degrees relates to the consistency of the information at the selected point and includes a small tolerance for the accuracy of the calibrated VOR receiver used in checking the point. The 2-degree figure does not relate to any figure for acceptance or rejection of an aircraft VOR installation, this being a matter for determination by Administrations and users in the light of the operation to be performed.

2.2.5 Check-points which can satisfy the foregoing requirements should be selected in consultation with the operators concerned. Provision of check-points in holding bays, at runway ends and in maintenance and loading areas, is usually desirable.

2.3 Marking of VOR check-points

Each VOR check-point must be distinctively marked. This marking must include the VOR bearing which a pilot would observe on the aircraft instrument if the VOR installation were operating correctly.

2.4 Use of VOR check-points

The accuracy with which a pilot must position the aircraft with respect to a check-point will depend on the distance from the VOR station. In cases where the VOR is relatively close to a check-point, particular care must be taken to place the aircraft's VOR receiving antenna directly over the check-point.

ATTACHMENT F. GUIDANCE MATERIAL CONCERNING RELIABILITY AND AVAILABILITY OF RADIOCOMMUNICATIONS AND NAVIGATION AIDS

1. Introduction and fundamental concepts

This Attachment is intended to provide guidance material which Member States may find helpful in providing the degree of facility reliability and availability consistent with their operational requirement.

The material in this Attachment is intended for guidance and clarification purposes, and is not to be considered as part of the Standards and Recommended Practices contained in this Annex.

1.1 Definitions

Facility availability. The ratio of actual operating time to specified operating time.

Facility failure. Any unanticipated occurrence which gives rise to an operationally significant period during which a facility does not provide service within the specified tolerances.

Facility reliability. The probability that the ground installation operates within the specified tolerances.

Note.— This definition refers to the probability that the facility will operate for a specified period of time.

Mean time between failures (MTBF). The actual operating time of a facility divided by the total number of failures of the facility during that period of time.

Note.— The operating time is in general chosen so as to include at least five, and preferably more, facility failures in order to give a reasonable measure of confidence in the figure derived.

Signal reliability. The probability that a signal-in-space of specified characteristics is available to the aircraft.

Note.— This definition refers to the probability that the signal is present for a specified period of time.

1.2 Facility reliability

1.2.1 Reliability is achieved by a combination of factors. These factors are variable and may be individually adjusted for an integrated approach that is optimum for, and consistent with, the needs and conditions of a particular environment. For example, one may compensate to some extent for low reliability by providing increased maintenance staffing and/or equipment redundancy. Similarly, low levels of skill among maintenance personnel may be offset by providing equipment of high reliability.

1.2.2 The following formula expresses facility reliability as a percentage:

$$R = 100\ e^{-t/m}$$

where:

R = reliability (probability that the facility will be operative within the specified tolerances for a time t, also referred to as probability of survival, P_s);

e = base of natural logarithms;

t = time period of interest;

m = mean time between facility failures.

It may be seen that reliability increases as mean time between failures (MTBF) increases. For a high degree of reliability, and for operationally significant values of t, we must have a large MTBF; thus, MTBF is another more convenient way of expressing reliability.

1.2.3 Experimental evidence indicates that the above formula is true for the majority of electronic equipments where the failures follow a Poisson distribution. It will not be applicable during the early life of an equipment when there is a relatively large number of premature failures of individual components; neither will it be true when the equipment is nearing the end of its useful life.

1.2.4 At many facility types utilizing conventional equipment, MTBF values of 1 000 hours or more have been consistently achieved. To indicate the significance of a 1 000-hour MTBF, the corresponding 24-hour reliability is approximately 97.5 per cent (i.e. the likelihood of facility failure during a 24-hour period is about 2.5 per cent).

1.2.5 Figure F-1 shows the probability of facility survival, P_s, after a time period, t, for various values of MTBF.

Note.— It is significant that the probability of surviving a period of time equal to the MTBF is only 0.37 (37 per cent); thus, it is not assumed that the MTBF is a failure-free period.

1.2.6 It may be seen that adjustment of MTBF will produce the desired degree of reliability. Factors which affect MTBF and hence facility reliability are:

a) inherent equipment reliability;

b) degree and type of redundancy;

c) reliability of the serving utilities such as power and telephone or control lines;

d) degree and quality of maintenance;

e) environmental factors such as temperature and humidity.

1.3 Facility availability

1.3.1 Availability, as a percentage, may be expressed in terms of the ratio of actual operating time divided by specified operating time taken over a long period. Symbolically,

$$A = \frac{\text{Actual time operating (100)}}{\text{Specified operating time}}$$

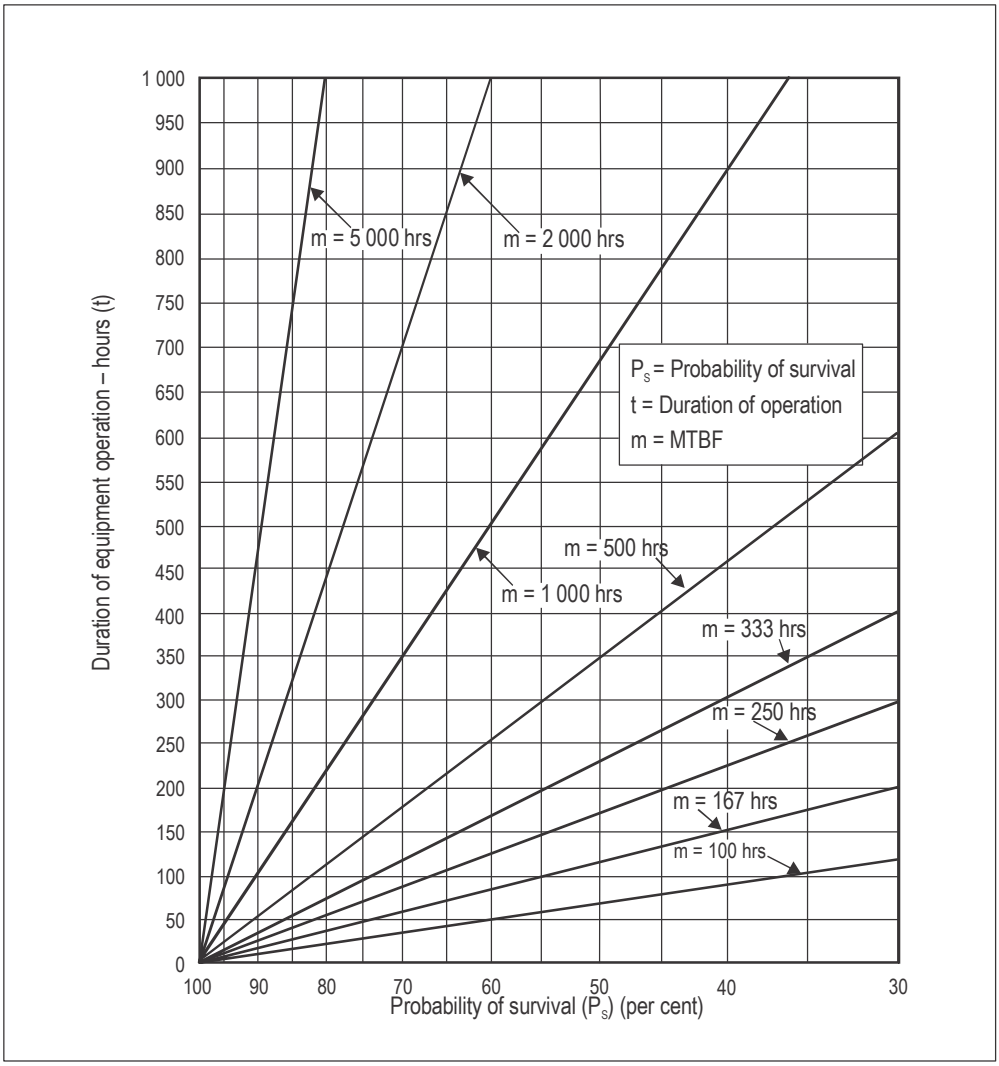

Figure F-1. Plot of $P_s = 100\ e^{-t/m}$

For example, if a facility was operating normally for a total of 700 hours during a 720-hour month, the availability for that month would be 97.2 per cent.

1.3.2 Factors important in providing a high degree of facility availability are:

a) facility reliability;

b) quick response of maintenance personnel to failures;

c) adequate training of maintenance personnel;

d) equipment designs providing good component accessibility and maintainability;

e) efficient logistic support;

f) provision of adequate test equipment;

g) standby equipment and/or utilities.

2. Practical aspects of reliability and availability

2.1 Measurement of reliability and availability

2.1.1 *Reliability.* The value that is obtained for MTBF in practice must of necessity be an estimate since the measurement will have to be made over a finite period of time. Measurement of MTBF over finite periods of time will enable Administrations to determine variations in the reliability of their facilities.

2.1.2 *Availability.* This is also important in that it provides an indication of the degree to which a facility (or group of facilities) is available to the users. Availability is directly related to the efficiency achieved in restoring facilities to normal service.

2.1.3 The basic quantities and manner of their measurement are indicated in Figure F-2. This figure is not intended to represent a typical situation which would normally involve a larger number of inoperative periods during the specified operating time. It should also be recognized that to obtain the most meaningful values for reliability and availability the specified operating time over which measurements are made should be as long as practicable.

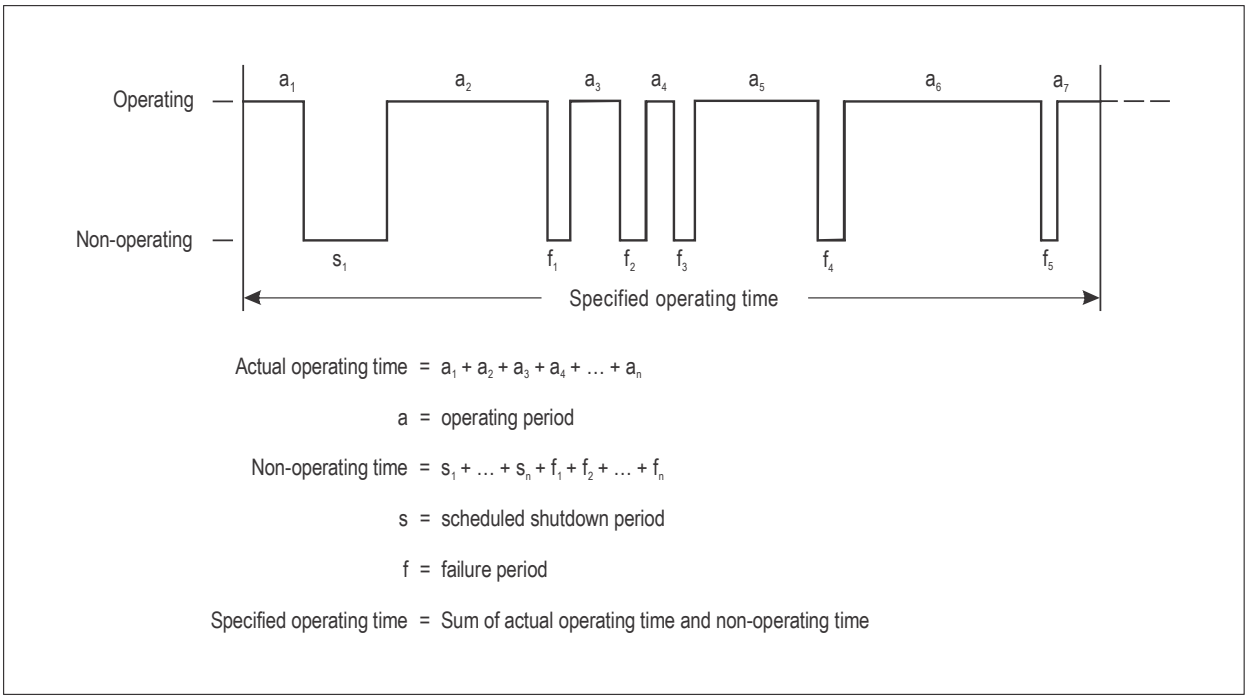

Figure F-2. Evaluation of facility availability and reliability

2.1.4 Using the quantities illustrated in Figure F-2, which includes one scheduled shutdown period and five failure periods, one may calculate mean time between failures (MTBF) and availability (A) as follows:

Let:

$a_1 + a_2 + a_3 + a_4 + a_5 + a_6 +$	a_7 =	5 540	hours
	s_1 =	20	hours
	f_1 =	2½	hours
	f_2 =	6¼	hours
	f_3 =	3¾	hours
	f_4 =	5	hours
	f_5 =	2½	hours
Specified operating time	=	5 580	hours

$$\text{MTBF} = \frac{\text{Actual operating time}}{\text{Number of failures}}$$

$$= \frac{\sum_{i=1}^{7} a_1}{5}$$

$$= \frac{5\,540}{5} = 1\,108 \text{ hours}$$

$$A = \frac{\text{Actual operating time} \times 100}{\text{Specified operating time}}$$

$$= \frac{\sum_{i=1}^{7} a_i \times 100}{\sum_{i=1}^{7} a_i + s_1 + \sum_{i=1}^{5} f_i}$$

$$= \frac{5\,540}{5\,580} \times 100 = 99.3 \text{ per cent}$$

ATTACHMENT G. INFORMATION AND MATERIAL FOR GUIDANCE IN THE APPLICATION OF THE MLS STANDARDS AND RECOMMENDED PRACTICES

1. Definitions

(see also Chapter 3, 3.11.1)

Dynamic side-lobe level. The level that is exceeded 3 per cent of the time by the scanning antenna far field radiation pattern exclusive of the main beam as measured at the function scan rate using a 26 kHz beam envelope video filter. The 3 per cent level is determined by the ratio of the side-lobe duration which exceeds the specified level to the total scan duration.

Effective side-lobe level. That level of scanning beam side lobe which in a specified multipath environment results in a particular guidance angle error.

MLS point D. A point 2.5 m (8 ft) above the runway centre line and 900 m (3 000 ft) from the threshold in the direction of the azimuth antenna.

MLS point E. A point 2.5 m (8 ft) above the runway centre line and 600 m (2 000 ft) from the stop end of the runway in the direction of the threshold.

Standard receiver. The airborne receiver model assumed in partitioning the MLS error budgets. The salient characteristics are: (1) signal processing based on the measurement of beam centres; (2) negligible centring error; (3) control motion noise (CMN) less than or equal to the values contained in Chapter 3, 3.11.6.1.1.2; (4) a 26 kHz bandwidth 2-pole low pass beam envelope filter; and (5) angle data output filtering by a single pole, low pass filter with a corner frequency of 10 radians per second.

2. Signal-in-space characteristics — angle and data functions

2.1 Signal format organization

2.1.1 The signal format is based on time-division multiplexing wherein each angle guidance function is transmitted in sequence and all are transmitted on the same radio frequency. The angle information is derived by measuring the time difference between the successive passes of highly directive, unmodulated fan beams. Functions may be transmitted in any order. Recommended time slots are provided for the approach azimuth, approach elevation, flare, and back azimuth angle functions. Preceding each scanning beam and data transmission is a preamble which is radiated throughout the coverage volume by a sector antenna. The preamble identifies the next scan function and also synchronizes the airborne receiver signal processing circuits and logic.

2.1.2 In addition to the angle scan function, there are basic and auxiliary data functions, each with its own preamble, which are also transmitted from the sector antennas. The preamble permits each function to be recognized and processed independently. Consequently, functions can be added to or deleted from the ground configurations without affecting the operation of the receiver. The codes used in the preamble and data functions are modulated by differential phase shift keying (DPSK).

2.1.2.1 *DPSK data signal characteristics.* The DPSK data are transmitted by differential phase modulation of the radio frequency carrier with relative phase states of 0 or 180 degrees. The DPSK data signal has the following characteristics:

data rate — 15.625 kHz
bit length — 64 microseconds
logic "0" — no phase transition
logic "1" — phase transition

2.1.3 Examples of the angle function organization and timing are shown in Figures G-1 and G-2.* Details and definitions of the data items shown in Figure G-1 are given in Chapter 3, 3.11.4.8.

2.1.4 The sequences of angle guidance and data transmissions shown in Figures G-3A, G-3B and G-3C have been demonstrated to provide sufficient freedom from synchronous interference.

2.1.4.1 The structure of these sequences is intended to provide sufficient randomization to preclude synchronous interference such as may be caused by propeller rotation effects.

2.1.4.2 The sequence pair shown in Figure G-3A accommodates the transmission of all functions. Any function not required may be deleted so long as the remaining functions are transmitted in the designated time positions.

2.1.4.3 The sequence pair shown in Figure G-3B accommodates the high rate approach azimuth function. Any function not required may be deleted so long as the remaining functions are transmitted in the designated time positions.

2.1.4.4 Figure G-3C shows the complete time multiplex transmission cycle which may be composed of the sequence pairs from Figure G-3A or from Figure G-3B. The open time periods between sequences can be used for the transmission of auxiliary data words as indicated. Basic data words also may be transmitted in any open time period.

2.1.4.5 Sufficient time is available in the cycle shown for the transmission of the basic data and the auxiliary data defined in words A1-A4, B1-B39, B40-B45 and B55, provided that data are also transmitted during unused time slots or slots devoted for data words within the sequences.

2.1.4.6 More efficient sequences may be designed by adjusting the timing within the sequences and the inter-sequence gaps to allow the transmission of additional auxiliary data words. Such sequences must be designed to provide equivalent freedom from synchronous interference as the sequences shown in Figures G-3A, G-3B and G-3C. Frequency domain analysis techniques may be utilized to demonstrate that alternative sequences are sufficiently randomized.

2.2 Angle guidance parameters

2.2.1 The angle guidance parameters that define the MLS angle measurement process are specified in Chapter 3, 3.11.4.5. Two additional parameters that are useful in visualizing the operation of the system are the midscan time (T_m) and the pause time. They may be derived from the Chapter 3 specifications and are shown for reference in the following table.

* All figures are located at the end of the Attachment.

Signal format midscan and pause times
(see Figure G-2)

Function	*Midscan[1] time, T_m (μs)*	*Pause time (μs)*
Approach azimuth	7 972	600
High rate approach azimuth	5 972	600
Back azimuth	5 972	600
Approach elevation	2 518	400
Flare elevation	2 368	800

1 Measured from the receiver reference time (see Appendix A, Table A-1).

2.2.2 *Function timing accuracy.* Because of the inaccuracy in the determination of the reference time of the Barker code, and because the transmitter circuits smooth the phase or amplitude during phase transitions of the DPSK modulation, it is not possible to determine the timing of the signal with an accuracy better than 2 microseconds from the signal-in-space. It is therefore necessary to measure the timing accuracy specified in Chapter 3, 3.11.4.3.4 on the ground equipment. Suitable test points should be provided in the ground equipment.

2.3 Azimuth guidance functions

2.3.1 *Scanning conventions.* Figure G-4 shows the approach azimuth and back azimuth scanning conventions.

2.3.2 *Coverage requirements.* Figures G-5 and G-6 illustrate the azimuth coverage requirements specified in Chapter 3, 3.11.5.2.2.

2.3.2.1 When the approach or back azimuth antenna sites are necessarily offset from the runway centre line, the following factors should be considered:

a) coverage requirements throughout the runway region;

b) accuracy requirements at the applicable reference datum;

c) approach azimuth to back azimuth transition; and

d) potential disturbances due to moving vehicles, aircraft or airport structures.

2.3.2.2 An offset azimuth antenna is normally adjusted such that the zero-degree azimuth is either parallel to the runway centre line or intersects the centre line extended at an operationally preferred point for the intended application. The alignment of the zero-degree azimuth with respect to the runway centre line is transmitted on the auxiliary data.

2.3.3 *High rate approach azimuth.* Where the approach proportional guidance sector is plus or minus 40 degrees or less, it is possible to use a higher scanning rate for the azimuth function. The high rate approach azimuth function is available to offset the increase in CMN caused by large beamwidth antennas (e.g. 3 degrees). Reducing the CMN provides two benefits: 1) angle guidance signal-in-space power density requirements can be reduced; and 2) dynamic side-lobe level requirements can be relaxed.

2.3.3.1 In general, this function will reduce the CMN caused by wide bandwidth, uncorrelated sources such as diffuse multipath or receiver thermal noise by a factor of $\sqrt{1/3}$ relative to the basic 13 Hz function rate. However, the full reduction of power density by $\sqrt{1/3}$ cannot be realized for all ground antenna beamwidths because of the requirement to provide sufficient power density for signal acquisition on a single scan basis. The power required for DPSK transmissions may be such that no economies are realized in the ground equipment transmitters by using the higher data rate (see Table G-1).*

2.3.3.2 However, with respect to the CMN performance, the full benefit of the increased data rate can be realized. For example, at the minimum signal levels shown in Table G-2, the azimuth CMN can be reduced from 0.10 degree to 0.06 degree for the 1-degree and the 2-degree beamwidth antennas.

2.3.4 *Clearance*

2.3.4.1 Where used, clearance pulses are transmitted adjacent to the scanning beam signals at the edges of proportional guidance sector as shown in the timing diagram in Figure G-7. The proportional guidance sector boundary is established at one beamwidth inside the scan start/stop angles, such that the transition between scanning beam and clearance signals occurs outside the proportional guidance sector. Examples of composite waveforms which may occur during transition are shown in Figure G-8.

2.3.4.2 When clearance guidance is provided in conjunction with a narrow beamwidth (e.g. one degree) scanning antenna, the scanning beam antenna is to radiate for 15 microseconds while stationary at the scan start/stop angles.

2.3.4.3 At some locations it may be difficult to satisfy the amplitude criteria of Chapter 3, 3.11.6.2.5.2, because of clearance signal reflections. At these locations the scan sector may be extended.

2.3.4.4 Care is to be taken with respect to the fly-right/fly-left clearance convention change when approaching azimuth stations in an opposite direction (e.g. approach towards the back azimuth antenna).

2.3.5 *Approach azimuth monitoring.* The intention of monitoring is to guarantee the guidance integrity appropriate for the promulgated approach procedure. It is not intended that all azimuth angles be monitored independently, but that at least one approach azimuth, normally aligned with the extended runway centre line, be monitored and that adequate means be provided to ensure that the performance and integrity of the other azimuth angles are maintained.

2.3.6 *Lower coverage limit determination.* When the threshold is not in line of sight of the approach azimuth antenna, the height of the lower limit of the approach azimuth coverage in the runway region is determined by simulation and/or field measurements. The lower limit of the azimuth coverage to be published is the height above the runway surface that satisfies the accuracy requirements in Chapter 3, 3.11.4.9.4 as determined by field measurements.

2.3.6.1 If operations require coverage below the coverage limits obtainable from 2.3.6, the azimuth antenna can be offset from the runway centre line and moved toward the runway threshold to cover the touchdown region. The airborne installation must use the azimuth guidance, precision distance and siting coordinates of the ground equipment to compute the centre line approach.

2.3.6.2 The landing minima obtainable from a computed centre line approach are, among other things, a function of the combined reliability and integrity of the MLS approach azimuth, DME/P transponder and airborne equipment.

* All tables are located at the end of the Attachment.

2.4 Elevation guidance functions

2.4.1 *Scanning conventions.* Figure G-9 shows the approach elevation scanning conventions.

2.4.2 *Coverage requirements.* Figures G-10A and G-10B illustrate the elevation requirements specified in Chapter 3, 3.11.5.3.2.

2.4.3 *Elevation monitoring.* The intention of monitoring is to guarantee the guidance integrity appropriate for the promulgated approach procedure. It is not intended that all elevation angles be monitored independently, but that at least one, normally the minimum glide path, be monitored, and that adequate means be provided to ensure that the performance and integrity of the other elevation angles are maintained.

2.5 Accuracy

2.5.1 *General*

2.5.1.1 System accuracy is specified in Chapter 3, in terms of the path following error (PFE), path following noise (PFN), and control motion noise (CMN). These parameters are intended to describe the interaction of the angle guidance signal with the aircraft in terms which can be directly related to aircraft guidance errors and the flight control system design.

2.5.1.2 The system PFE is the difference between the airborne receiver angle measurement and the true position angle of the aircraft. The guidance signal is distorted by ground and airborne equipment errors and errors due to propagation effects. To assess the suitability of the signal-in-space for aircraft guidance, these errors are viewed in the pertinent frequency region. The PFE includes the mean course error and the PFN.

2.5.2 *MLS measurement methodology*

2.5.2.1 The PFE, PFN and CMN are evaluated by using the filters defined in Figure G-11. The filter characteristics are based on a wide range of existing aircraft response properties and are considered adequate for foreseeable aircraft designs as well.

2.5.2.2 While the term “PFE” suggests the difference between a desired flight path and the actual flight path taken by an aircraft following the guidance signal, in practice, this error is evaluated by instructing the flight inspection pilot to fly a desired MLS azimuth and recording the difference between the airborne equipment output guidance indication from the PFE filter and the corresponding aircraft position measurement as determined by a suitable position reference. A similar technique using the appropriate filter determines the CMN.

2.5.2.3 *Error evaluation.* The PFE estimates are obtained at the output of the PFE filter (test point A in Figure G-11). The CMN estimates are obtained at the output of the CMN filter (test point B in Figure G-11). Filter corner frequencies are shown in Figure G-11.

2.5.2.3.1 The PFE and CMN for approach azimuth or for back azimuth are evaluated over any 40-second interval of the flight error record taken within the coverage limits (i.e. $T = 40$ in Figure G-12). The PFE and CMN for approach elevation are evaluated over any 10-second interval of the flight error record taken within the coverage limits (i.e. $T = 10$ in Figure G-12).

2.5.2.3.2 The 95 per cent probability requirement is interpreted to be met if the PFE or CMN does not exceed the specified error limits for more than 5 per cent of the evaluation interval (see Figure G-12).

2.5.2.3.3 An alternative flight inspection procedure can be used which does not rely on an absolute reference. In this procedure, only the fluctuating components of the flight record produced at the output of the PFE filter are measured and compared with the PFN standard. The average value of the PFE is assumed to not exceed the mean course alignment specified during the flight inspection period. Therefore, the mean course alignment is added to the PFN measurement for comparison with the specified system PFE. The CMN may be similarly evaluated without accounting for the mean course alignment.

2.5.2.4 *Ground and airborne instrumentation errors.* The instrumentation error induced by the ground and airborne equipment may be determined by measurements taken in an environment which is free from reflected signals or other propagation anomalies which can cause beam envelope perturbations.

2.5.2.4.1 First, the instrumentation errors associated with the standard airborne receiver are determined using a bench test instrument, and the centring error is adjusted to zero. Airborne equipment errors can be measured by recording 40 seconds of data using a standard bench test set. The data can then be divided into four 10-second intervals. The average of each interval is considered to be the PFE while twice the square root of its associated variance is the CMN.

Note.— The receiver output may be evaluated using the PFE and CMN filters, if desired.

2.5.2.4.2 Second, this standard receiver is used to measure the total system instrumentation error by operating the ground equipment on an antenna range or in some other reflection-free environment. Since the receiver centring error has been made negligible, the measured PFE can be attributed to the ground equipment. The ground equipment CMN is obtained by subtracting the known standard receiver CMN variance from the CMN variance of the measurement. The average error over a 10-second measurement interval is considered to be the PFE, while twice the square root of the differential variances is considered to be the instrumental CMN.

2.6 Power density

2.6.1 *General*

2.6.1.1 Three criteria establish the angle power budgets:

a) angle single-scan acquisition requires a 14-dB signal-to-noise ratio (SNR) as measured at the beam envelope filter (i.e. the video SNR);

b) the angle CMN must be maintained within specified limits;

c) the DPSK transmissions must have a detection probability at the extremes of coverage of at least 72 per cent.

2.6.1.2 The source of CMN at 37 km (20 NM) is primarily internal receiver thermal noise. The noise induced error (dθ) can be estimated by:

$$d\theta = \frac{\theta_{BW}}{2\left(\sqrt{SNR}\sqrt{g}\right)}$$

$$g = \frac{\text{Function sample rate}}{2\ (\text{Filter noise bandwidth right})}$$

where θ_{BW} is the antenna beamwidth in degrees and *g* is the ratio of the function sample rate to the noise bandwidth of the receiver output filter. For a single pole filter, the noise bandwidth is π/2 times the 3 dB bandwidth. This expression reflects the CMN dependence upon ground antenna beamwidth and sample rate.

2.6.2 *System power budget*

2.6.2.1 The system power budget is presented in Table G-1. The power density specified in Chapter 3, 3.11.4.10.1, is related to the signal power specified in Table G-1 at the aircraft antenna by the relation:

Power into isotropic antenna (dBm) =
Power density (dBW/m^2) – 5.5

2.6.2.2 The angle function measurement assumes a 26-kHz beam envelope filter bandwidth. The video (SNR) given in 2.6.1 is related to the intermediate frequency (IF) SNR by:

$$\text{SNR (Video)} = \text{SNR (IF)} + 10\log\left[\frac{\text{IF noise bandwidth}}{\text{Video noise bandwidth}}\right]$$

2.6.2.3 The DPSK preamble function analysis assumes: 1) a carrier reconstruction phase lock loop airborne receiver implementation; and 2) that the receiver preamble decoder rejects all preambles which do not satisfy the Barker code or fail the preamble parity check.

2.6.2.4 Items a) through e) in Table G-1 are functions of the aircraft position or weather, and thus have been assumed to be random events. That is, they will simultaneously reach their worst-case values only on rare occasions. Therefore, these losses are viewed as random variables and are root-sum-squared to obtain the loss component.

2.6.2.5 To support autoland operations, power densities higher than those specified for the approach azimuth angle signals in Chapter 3, 3.11.4.10.1 are required at the lower coverage limit above the runway surface to limit the CMN to 0.04 degree. Normally, this additional power density will exist as a natural consequence of using the same transmitter to provide the scanning beam and DPSK signals and considering other power margins such as the available aircraft antenna gain, propagation losses, coverage losses at wide angles and rain losses which can be, at least partially, discounted in the runway region (see Table G-1).

2.6.3 *Multipath relative power density*

2.6.3.1 Fixed or mobile obstacles around the MLS ground transmitting antennas may create reflections which are known as multipath. The reflections are affecting all MLS transmissions (DPSK, angle guidance signals, out-of-coverage indication signals and clearance pulses). Relative levels between the direct guidance signal (coding the correct guidance signal) and the reflected signals are used by the MLS angular receiver to acquire and track the correct signals. These relative levels therefore have to be within given and known tolerances to allow correct receiver performances. The MOPS for MLS Airborne Receiving Equipment, EUROCAE ED-36B document, contains the MLS receivers' minimum operational performance specifications ensuring correct performances against the multipath environment, as specified in Chapter 3, 3.11.4.10.3.

2.6.3.2 The four-decibel minimum ratio in Chapter 3, 3.11.4.10.3.1 and 3.11.4.10.3.3, guarantees a valid acquisition by the receiver. Lower ratios may delay signal acquisition or create false acquisition and tracking of multipath signals.

2.6.3.3 The maximum one-second duration in Chapter 3, 3.11.4.10.3.1 and 3.11.4.10.3.3, will ensure that the correct guidance information will continue to be output by the receiver without alert and will therefore not cause loss of service. This duration has to be assessed using approaching aircraft minimum ground speed.

2.6.3.4 Accuracy requirements will limit the level and duration of azimuth multipath coding angles within a narrow sector around centre line (i.e. +/-4°) as the scanning beam shape depicted in Chapter 3, 3.11.5.2.1.3, will be affected. The periodic ground and flight checks will show whether the error contribution from static multipath is compatible with the accuracy requirements. Critical and sensitive areas protection procedures will ensure that dynamic multipath error contribution will not degrade the overall accuracy beyond accuracy requirements.

2.6.3.5 For elevation guidance, signal-in-space degradation by multipath at lower height is not anticipated.

2.6.4 *Airborne power budget*

2.6.4.1 Table G-2 provides an example of an airborne power budget used in developing the power density standards.

2.7 Data applications

2.7.1 *Basic data.* The basic data defined in Chapter 3, 3.11.4.8.2.1 are provided to enable airborne receivers to process scanning beam information for various ground equipment configurations and to adjust outputs so they are meaningful to the pilot or airborne system. Data functions are also used to provide additional information (e.g. station identification and equipment status) to the pilot or airborne system.

2.7.2 *Auxiliary data*

2.7.2.1 The auxiliary data defined in Chapter 3, 3.11.4.8.3.1 and 3.11.4.8.3.2 are provided to digitally uplink the following types of information:

a) *Data describing ground equipment siting geometry.* These are transmitted in words A1-A4 and in some of the words B40-B54.

b) *Data to support MLS/RNAV operations.* These are transmitted in words B1-B39.

c) *Operational information data.* These are transmitted in words B55-B64.

2.7.2.2 The rates of transmission of auxiliary data words are based on the following criteria:

a) Data that are required to be decoded within six seconds upon entering the MLS coverage volume should be transmitted with a maximum time between transmissions of 1 second (see 7.3.3.1.1).

b) Data that are required for an intended operation but are not required to be decoded within six seconds should be transmitted with a maximum time between transmissions of 2 seconds. This rate will allow the generation of a warning upon loss of data within 6 seconds.

c) Operational information data should be transmitted with a maximum time between transmissions of 10 seconds. This will allow the generation of a warning upon loss of data within 30 seconds.

2.7.3 *Application of MLS/RNAV data words B1 through B39*

2.7.3.1 The data contained in auxiliary data words B1-B39 are designed to allow MLS/RNAV operations to be supported utilizing only the data contained within the MLS data words. In order to support computed centre line approaches to both the primary and secondary runways, curved approaches and departures, and missed approaches, these data include information on procedure type (approach or departure), procedure name, runway and way-points.

2.7.3.2 The data transmitted by approach azimuth and back azimuth are segregated. This means, for example, that each will have a separate cyclic redundancy check (CRC) and be decoded independently by the airborne equipment. Data for a given MLS/RNAV procedure are transmitted in the coverage where the procedure begins. Normally this means that approach and missed approach data would be transmitted by approach azimuth and departure data would be transmitted by back azimuth equipment. However, way-points belonging to approaches, missed approaches or departures could be transmitted in either the azimuth or the back azimuth coverage. For example, a departure may be initiated in approach azimuth coverage, therefore that data would be transmitted by approach azimuth. If the procedure begins in a common coverage region the associated data can be transmitted in only one region, except where otherwise dictated by operational requirements.

2.7.3.3 The procedures are defined by a series of way-points. The way-points are specified in a cartesian coordinate system with X, Y and Z coordinates whose origin is at the MLS datum point. The coordinate system is illustrated in Figure G-13.

2.7.3.4 The segments between way-points are either straight or curved. Curved segments are defined as the arc joining two way-points, as illustrated in Figure G-14. The arc of the circle is always tangent to the preceding and following segments, straight or circular. Final approach segments and segments pointing to the initial way-point of an approach procedure or extending from the last flown way-point of a departure or missed approach procedure are always straight. They are extensions to straight segments or tangents to circular segments. These straight segments would not necessarily require a way-point at the edge of the coverage, thus way-points could be saved.

2.7.3.5 For any procedure type the coding starts with the way-point farthest from the threshold and ends with the way-point nearest to the runway. All way-points for approach procedures must be coded before any missed approach way-points or departure way-points. This rule simplifies the decoding by segregating the way-points belonging to the approaches from the others. Several procedures can share one or more way-points. When this is the case it is feasible to transmit this information only once. The shared way-points must be the final ones for approach procedures and the initial ones for missed approach and departure procedures. Approaches, missed approaches and departures can share data provided the data are transmitted in the same coverage sector. When way-points are shared with a procedure previously defined in the database this is indicated by a way-point index following a way-point. The way-point index gives the location in the database of the first shared way-point.

2.7.3.6 The way-point index is the value representing the sequential order in which the way-points are listed in the database. It is used in the coding to indicate where the way-points for a procedure are located. A way-point index of zero in the procedure descriptor indicates that this is a computed centre line application where no way-points are provided.

2.7.3.7 Although way-points are defined by X, Y and Z coordinates, in a variety of cases not all coordinates have to be transmitted. Way-points located on the primary runway centre line have a Y coordinate equal to zero. The corresponding field defining this value can be omitted by setting the “Y coordinate follows” bit to ZERO.

2.7.3.8 Whenever the Z coordinate is not necessary for path construction, data can be saved by not transmitting this value. This is indicated by setting the “Z coordinate follows” bit to ZERO. This may apply to initial way-points preceding the final approach fix where guidance is based on altimetry and not on a computed MLS vertical position. It may also apply to way-points located on a constant gradient between way-points for which the Z value is defined. In this case, the airborne equipment would compute the Z coordinate assuming a constant gradient. Missed approach and departure way-points located in back azimuth coverage are also candidates for deleting the Z coordinate, since vertical guidance is not available. For the back azimuth application, the Z coordinate may be transmitted for use by the airborne equipment to resolve the horizontal position of the aircraft. This allows for a reduction of the lateral errors introduced in the conversion from the slant range and conical back azimuth angle to X-Y coordinates.

2.7.3.9 The 3-bit field following the way-point coordinates contains the next segment/field identifier. This data item indicates whether the next segment of the procedure is straight or curved, whether the current way-point is the last one defined for the procedure, and whether to link the procedure to a missed approach or a shared portion of another procedure identified by a missed approach index or next way-point index. It also indicates whether a data field for threshold crossing height or virtual azimuth to way-point distance is appended to the way-point definition.

2.7.3.9.1 Some typical applications of the identifiers in Appendix A, Table A-17 are listed below. This list is not all inclusive:

a) identifiers 0 and 1 are used when the next way-point in the procedure is not a shared way-point, or is a shared way-point coded for the first time;

b) identifiers 2 and 3 are used to refer to the next way-points in the procedure that are already coded and shared with another procedure. The coding of these way-points is not repeated but the index allows the connection of the procedure to the shared way-points of the other procedure;

c) identifiers 4 and 5 are used in the next-to-last way-point for procedures ending or beginning on the primary runway. The last way-point is the threshold. For this way-point only, the threshold crossing height is specified since the exact location of the threshold with respect to the MLS datum is given in the auxiliary A words. Identifier 4 is used when the MLS/RNAV missed approach guidance is not required, and identifier 5 is used when a "missed approach index" follows;

d) identifiers 6 and 7 are used for the final way-point of any procedure except as noted in c) above. For the primary runway these identifiers are used if there is a need to fully specify the X, Y and Z coordinates of the last way-point. These identifiers are also used for secondary runways and helipads. Identifier 6 is used when no missed approach is following and identifier 7 when a missed approach follows; and

e) identifiers 5 and 7 do not apply to missed approaches and departures.

2.7.3.10 Following the convention for other MLS basic and auxiliary data, all digital data encoded in the database are transmitted with the least significant bit first and the sign bit is transmitted as the most significant bit, with a ONE indicating a negative value. It is noted that the auxiliary data word addresses used to indicate the last approach azimuth database word and the first back azimuth database word are transmitted with the most significant bit first.

2.7.4 *Example application of MLS/RNAV data words*

2.7.4.1 The following paragraphs provide an example of the data assignment process for MLS/RNAV data words contained in auxiliary data words B1-B39. A sample set of approach and departure procedures is provided and the process by which the various way-points and associated procedure characteristics are interpreted and formatted for transmission is described.

2.7.4.2 Table G-3 depicts a set of sample approach, missed approach, and departure procedures for two hypothetical runways. Table G-4 contains way-point data for the sample procedures indicated in Table G-3 and illustrated in Figure G-15.

2.7.4.3 Prior to inserting the procedures data into the structure of B1-B39, the characteristics of the MLS/RNAV data must be understood in order to optimally use the available number of data words. In the data set of Tables G-3 and G-4, the following specific characteristics can be noted: procedures KASEL and NELSO share the same way-points No. 1 (WP 1) and No. 2 (WP 2); procedures KASEL and NELSO link to a missed approach procedure; procedure SEMOR is a secondary runway approach; procedure LAWSO is a departure procedure and will be transmitted in back azimuth coverage; all way-points outside of the precision final approach fix (PFAF) will not require the Z coordinate to be transmitted; the Y coordinate will not have to be transmitted for several way-points that are located on the extended primary runway centre line.

2.7.4.4 Data word B1 specified in Appendix A, Table A-15, defines the structure of the MLS/RNAV data to be transmitted in the approach azimuth coverage sector. This word also contains the approach azimuth CRC code. The number of procedures to be transmitted in the approach azimuth sector is 3. This can be determined from Table G-3. The data word address with the last approach azimuth MLS/RNAV data word is determined after the complete set is inserted into the format. In this case, the address of the last word is B11. The CRC code is calculated as described in Note 3 to Table A-15. Words B42 and B43 are not transmitted so that the relevant bits are set to ZERO. Word A4 is transmitted so that the relevant bit is set to ONE. The coding for data word B1 is shown in Table G-5.

2.7.4.5 Data word B39 specified in Appendix A, Table A-15 defines the structure of the MLS/RNAV data to be transmitted in the back azimuth coverage sector. This word also contains the back azimuth CRC code. The number of procedures to be transmitted in the back azimuth sector is 1. The data word address with the first back azimuth MLS/RNAV data word is determined after the complete set is inserted into the format. In this case the address of the first word is B36. The CRC code is calculated as described in Note 3 to Table A-15. Word B43 is not transmitted so that bit is set to ZERO. The back azimuth map/CRC indicator bit is set to ONE to indicate that this is a map/CRC word. The coding for data word B39 is shown in Table G-5.

2.7.4.6 Procedure descriptor words specified in Appendix A, Table A-15 are defined for all approach and departure procedures. Missed approach procedures are linked to approach procedures in the data format and hence do not require a procedure descriptor. Procedure descriptor words for the sample data set are shown in Table G-6. It is noted that the procedure descriptor data words cannot be fully defined until the completion of the actual assignment of the way-point data due to the need for a "first way-point index" associated with each procedure. This item is the first way-point for the procedure sequence. The index is generated as indicated in 2.7.3.6. It is noted that the "validity indicator" of a procedure name (see Table G-4) is the version number of the procedure and is a value from 1 to 9.

2.7.4.7 The way-point data assignment process is in accordance with Appendix A, Tables A-15, 16 and 17. Table G-7 represents the assignment of the sample data set. The preambles, addresses and parity bits have been left out of the table. Starting with the data word immediately after the approach procedure descriptor words, the first way-point of the first procedure is assigned. For the sample data set, it means that data word B5 is the first word with way-point data. The next step is to insert the data into the appropriate format. The procedures data always commence with the X coordinate of the initial way-point. The structure of the database allows for individual data items to overlap between auxiliary data words. For example, the first 14 bits of the X coordinate of WP 3 of procedure KASEL are transmitted in word B5. The final bit is transmitted in word B6.

2.7.4.7.1 Because of the bit weight of the way-point coordinate least significant bit, the coded way-point coordinate must be rounded. It is desirable to achieve a result as close as possible to the actual way-point coordinate value. Such rounding is normally performed by adding to the actual value half the weight of the LSB then performing integer division on the result. For example, the X coordinate of WP 2 of procedure KASEL is 6 556 m (actual). The coded binary value should be 2 561 since,

$$Integer\left[\frac{\left(|\,6\,556\,| + \frac{2.56}{2}\right)}{2.56}\right] = 2\,561$$

For negative numbers the sign bit should be carried through the calculation.

2.7.4.8 After the X coordinate is the "Y coordinate follows" bit. This bit would be set to zero, and the Y coordinate would not be transmitted as shown in Table G-7 for KASEL WP 2 and WP 1. As shown in KASEL WP 3, the Y coordinate is needed and is transmitted after the "Y coordinate follows" bit.

2.7.4.9 Depending on the coding of the "Y coordinate follows" bit, the "Z coordinate follows" bit is coded after the Y coordinate information. For procedure KASEL, WP 4 does not require the Z coordinate since it is prior to the PFAF. The Z coordinate is also not required for WP 2 because there is a constant glide path between WP 3 and WP 1. As shown in KASEL WP 3, the Z coordinate is needed and is transmitted after the "Z coordinate follows" bit.

2.7.4.10 The next segment/field identifier is assigned in accordance with Appendix A, Table A-17. For the identifier following WP 2 in procedure KASEL, the value 5 indicates that the threshold way-point height is transmitted next, followed by the way-point index of the missed approach procedure. For procedure NELSO, since the last two way-points are shared with procedure KASEL the identifier following WP 3 has the value 3, indicating that the index for the next way-point is transmitted next. In this case the index is 3, pointing to WP 2 of procedure KASEL. For the missed approach procedure the identifier is set to 6, indicating that this is the last way-point in the procedure. For secondary runway procedure SEMOR the identifier is also set to 6. In this case, however, it indicates that the virtual azimuth to way-point distance follows.

2.7.4.11 Table G-8 shows the assignment of the departure procedure way-points. The departure data start with word B36, the procedure descriptor. The way-points data begin with word B37. Departure data are assigned using the same method as for the approach data.

2.7.4.12 After the database is completely assigned, the CRC values may be calculated using B1-B39 and the other required data items. Table G-9 shows the results of this calculation for the sample data set including the auxiliary A words, basic word B6, and auxiliary words B40-B41.

2.8 Adjacent channel interference considerations

2.8.1 The standard has been structured such that there is at least a 5-dB margin to account for variations in the effective radiated power above the minimum power density specification. The interference specification is based upon worst-case antenna beamwidth combinations, data rate, and undesired interference synchronization.

3. Ground equipment

3.1 Scanning beam shape

3.1.1 The azimuth scanning beam envelope on the antenna boresight and the elevation scanning beam envelope at the preferred elevation angle, as detected by a standard receiver, has to conform to the limits specified in Figure G-16 under conditions of high SNR and negligible multipath (e.g. during a trial on an antenna range). The –10 dB symmetry relative to accuracy performance is not necessarily expected in the equipment design.

3.2 Scanning beam side lobes

3.2.1 *Performance specification.* The antenna side-lobe design has to satisfy two conditions: 1) the dynamic side-lobe level does not prevent the airborne receiver from acquiring and tracking the main beam. Satisfactory performance cannot be assured if dynamic side lobes persist at levels above –10 dB; 2) the effective side-lobe level is compatible with the system error budget.

3.2.2 The effective side-lobe level (P_{ESL}) is related to the dynamic side-lobe level (P_{DYN}) by:

$$P_{ESL} = K \times P_{DYN}$$

where K is a reduction factor which depends upon the antenna implementation. The reduction factor may be dependent upon:

a) a directive antenna element pattern which reduces the multipath signal level relative to the coverage volume;

b) the degree of randomness in the dynamic side lobes.

Note.— The dynamic side lobes are of least concern, if the measured dynamic side-lobe levels are less than the specified effective side-lobe levels.

3.2.3 Lateral multipath reflections from the azimuth antenna side lobes and ground multipath reflections from elevation antenna side lobes can perturb the main beam and induce angular errors. To ensure that the error dθ generated by the antenna side lobes is within the propagation error budgets, the required effective side-lobe level ESL can be estimated using:

$$P_{ESL} = \frac{\mathrm{d}\theta}{\theta_{\mathrm{BW}} P_{\mathrm{R}} P_{\mathrm{MA}}}$$

where P_{R} is the multipath obstacle reflection coefficient, θ_{BW} is the ground antenna beamwidth and P_{MA} is the motion averaging factor.

Note.— A -25 dB P_{ESL} will generally satisfy the propagation error budget in a complex propagation environment.

3.2.4 The motion averaging factor depends on the specific multipath geometry, the aircraft velocity, the function data rate and the output filter bandwidth. For combinations of multipath geometry and aircraft velocity such that the multipath scalloping frequency is greater than 1.6 Hz, the motion factor is:

$$P_{\mathrm{MA}} = \sqrt{\frac{2\ (\text{output filter noise bandwidth})}{\text{Function data rate}}}$$

3.2.5 This factor can be further reduced at higher multipath scalloping frequencies where the multipath-induced beam distortions are uncorrelated within the time interval between the TO and FRO scans.

3.3 Approach elevation antenna pattern

3.3.1 If required to limit multipath effects, the horizontal radiation pattern of the approach elevation antenna gradually de-emphasizes the signal away from the antenna boresight. Typically the horizontal pattern of the approach elevation antenna is to be reduced by 3 dB at 20 degrees off the boresight and by 6 dB at 40 degrees. Depending on the actual multipath conditions, the horizontal radiation pattern may require more or less de-emphasis.

3.4 Approach/back azimuth channels

3.4.1 When a runway has MLS installed for both approach directions, the equipment not in use for the approach may be operated as a back azimuth. If it is desired to assign different channels to each runway direction, necessarily the azimuth units will be operated on different frequencies depending on the mode of operation — approach or back azimuth. Care must be taken in the channel assignments so that the two frequencies are close enough to avoid any mechanical adjustment of the azimuth antenna vertical pattern when the approach direction is reversed.

3.4.2 The frequency separation should be limited such that the loss in pattern gain for back azimuth (from the optimum approach value) can be accommodated by the transmitter power margins shown in Table G-1 for the back azimuth function.

4. Siting considerations

4.1 MLS/ILS collocation

4.1.1 *MLS elevation antenna*

4.1.1.1 *Introduction*

4.1.1.1.1 When collocating an MLS elevation antenna with an ILS glide path, a series of decisions will have to be made to determine an elevation antenna location. Siting criteria have been developed based on minimizing the effects of MLS elevation equipment on the ILS glide path signal. This criteria along with signal-in-space, operational, critical areas, and obstacle clearance considerations will influence the final location of the elevation antenna.

4.1.1.1.2 The purpose is to start with a general region for siting the elevation antenna and then to reduce this region to an optimum location for a particular facility. This goal is achieved by stepping through a series of factors and considerations. This decision-making process is shown as a logic flow diagram in Figure G-17. These guidelines are not intended to be an all-inclusive MLS siting manual, but only to provide additional guidance when MLS collocation with ILS is required.

4.1.1.1.3 Referring to Figure G-17, the section number corresponds to one of the three siting geometries, that is 4.1.1.2 for "siting the elevation antenna between the glide path and runway", etc. The numbers in each block reference the specific paragraph in the supporting text for Figure G-17. This paragraph provides a more detailed description of the factor(s) to be considered for that step.

4.1.1.1.4 The two general regions for siting the elevation antenna are shown in Figure G-18. Depending on the location of the glide path, either one region or the other may not exist. In addition, these regions must already satisfy signal-in-space criteria prior to their consideration.

4.1.1.2 *Siting the elevation antenna between the glide path and the runway*

4.1.1.2.1 The setback for the elevation antenna is dependent upon the MLS approach reference datum (ARD) height. The MLS ARD must satisfy the criteria stated in Chapter 3, 3.11.4.9.1. The elevation antenna setback can be determined by the equation (see Figure G-19):

$$SB = \frac{ARDH - RPCH}{\tan\theta} \geq \frac{15 - RPCH}{\tan\theta}$$

where:

all distances are in metres;

SB is the setback distance of the elevation antenna phase centre from the runway threshold, parallel to the runway centre line;

RPCH is the relative phase centre height of the elevation antenna compared to the runway surface at threshold. (This includes the elevation antenna phase centre height and the difference in terrain elevation between the threshold and the elevation antenna site.);

ARDH is the desired MLS approach reference datum height; and

θ is the minimum glide path.

4.1.1.2.2 The conical coordinate system of the elevation antenna and its offset from centre line will cause the minimum glide path elevation guidance to be above the approach reference datum. Considering the recommendation of Chapter 3, 3.11.5.3.5.2.2 this offset should be limited by the following equation:

$$(OS)^2 + (SB)^2 \leq \left[\frac{(18 - RPCH)}{\tan\theta}\right]^2$$

where:

all distances are in metres; and

OS is the offset distance between the elevation antenna phase centre and the vertical plane containing the runway centre line (see Figure G-19).

4.1.1.2.3 Furthermore, the MLS ARD should be coincident with the ILS reference datum within one metre as stated in Chapter 3, 3.11.5.3.5.3. This is given in the following equation:

$$\frac{RDH - 1 - RPCH}{\tan\theta} \leq SB \leq \frac{RDH + 1 - RPCH}{\tan\theta}$$

where:

all distances are in metres; and

RDH is the height of the ILS reference datum.

4.1.1.2.4 To determine the diagonal boundary for Region 1 of Figure G-18 two factors need to be considered. The first factor is that the elevation antenna must not penetrate the region through which the Fresnel zone for the ILS glide path migrates during an approach. In general, this requirement can be achieved by siting the elevation antenna to the runway side of the diagonal line between the glide path antenna mast and the runway centre line at threshold. The value for φ in Figure G-18 is dependent on the location of the glide path antenna mast relative to centre line at threshold. The second factor is to minimize lateral penetration of the glide path antenna pattern (see 4.1.1.3.2). However, for this elevation antenna region satisfying the second factor is preferable but not essential.

4.1.1.2.5 After determining the acceptable range of elevation antenna locations based on the above criteria, the minimum elevation antenna offset is determined by the obstacle limitation requirements in Annex 14, Chapter 4.

4.1.1.2.6 When possible the elevation antenna location is to be adjusted to minimize the effects of the elevation antenna critical area on flight operations. Furthermore, it may be desirable to choose the elevation antenna location in a way which maximizes the union of the MLS elevation critical area and the ILS glide path critical area. This union will minimize any enlargement of the combined critical areas. Due to the necessity to site the elevation antenna in front of the glide path, the elevation antenna will normally have to be sited in the glide path critical area. For elevation antenna critical areas see 4.3. For a description of the glide path critical area see Attachment C, 2.1.10.

4.1.1.2.7 Once the site for the elevation antenna has been identified, a location for the elevation antenna monitor must be found. The elevation signal is to be monitored as stated in 2.4.3. The height of the elevation field monitor is dependent on the use of integral monitoring of the minimum glide path and obstacle clearance criteria. The following considerations may be helpful in determining a monitor location:

a) It is desirable to have the field monitor as close to the far field as practical to minimize near field effects on the monitor. However, this distance is to be limited to avoid false alarms due to vehicle and aircraft traffic between the field monitor and the antenna.

b) It is desirable to minimize blockage and distortion of the elevation signal by the monitor in the final approach region. This may be achieved if the monitor location is offset up to 30 degrees from the elevation antenna boresight and at distances from 40 m (130 ft) to 80 m (260 ft) depending on particular equipment designs.

c) The field monitor offset from the antenna boresight is to be limited to maintain the appropriate monitor sensitivity to mechanical stability. It is not intended that the field monitor offset will exceed 30 degrees from the elevation antenna boresight.

d) The elevation field monitor is to be sited to avoid affecting, or being affected by, the ILS glide path field monitor.

4.1.1.3 *Siting the elevation antenna at a greater offset than the glide path*

4.1.1.3.1 When siting the elevation antenna at offsets of 130 m (430 ft) to 180 m (590 ft) from runway centre line, the conical effect on the achieved approach reference datum height becomes more prominent. Depending on the facility, the elevation antenna setback may have to be adjusted to satisfy the criteria discussed in 4.1.1.2.1, 4.1.1.2.2 and 4.1.1.2.3.

4.1.1.3.2 When siting the elevation antenna at an offset from runway centre line greater than that of the resident glide path, the elevation antenna should not penetrate the lateral pattern of the glide path. The value of Φ in Figure G-18 is dependent on the type of glide path antenna present and the physical characteristics of the elevation equipment. In general, "Φ" denotes the –10 dB point in the glide path antenna lateral pattern. The –10 dB value may be relaxed to –4 dB, particularly for capture-effect glide path antennas, subject to verification of glide path signal quality.

4.1.1.3.3 After determining the acceptable range of elevation antenna locations based on the above criteria, this location may have to be bounded further to satisfy obstacle limitation requirements in Annex 14, particularly taxiway-to-obstacle separation criteria.

4.1.1.4 *Alternatives*

4.1.1.4.1 If collocation of the elevation antenna with the glide path cannot readily be achieved, an alternative is to site the elevation antenna on the opposite side of the runway.

4.1.2 *MLS azimuth antenna*

4.1.2.1 *Introduction*

4.1.2.1.1 When collocating the MLS azimuth antenna with the ILS localizer, one will have to make a series of decisions which will determine the azimuth antenna location. Siting criteria have been developed based on minimizing the effects of the MLS azimuth antenna equipment on the ILS localizer signal and vice versa. The criteria developed along with signal-in-space, operation, critical areas, and obstacle clearance considerations will influence the final location of the azimuth antenna. Since the presence of a humped runway or approach lighting system may require an increase in the azimuth antenna phase centre height (PCH), these factors must be considered when applying any of the following criteria.

4.1.2.1.2 The purpose is to start with a general region for siting the azimuth antenna and then reduce this region to an optimum location for a particular facility. This goal is achieved by stepping through a list of considerations shown as a logic flow diagram in Figure G-20.

4.1.2.1.3 Referring to Figure G-20, the section numbers refer to one of the four siting geometries (i.e. 4.1.2.2 corresponds to "azimuth antenna sited ahead of the localizer antenna", etc.). The numbers in each box reference a specific paragraph in the supporting text for Figure G-20. This paragraph provides a more detailed description of the factors to be considered for that step.

4.1.2.1.4 The general regions for siting the azimuth antenna are shown in Figure G-21.

4.1.2.2 *Azimuth antenna sited ahead of localizer antenna*

4.1.2.2.1 The azimuth antenna is to be symmetrically sited on the localizer course line at least 30 m (100 ft) ahead of the localizer antenna array. The limit for the maximum distance (variable "X" in Figure G-21) is determined by the requirement to satisfy the obstacle limitation requirements set forth in Annex 14 for both the azimuth antenna structure and azimuth monitor. This is the preferred location for the azimuth antenna. However, factors such as the presence of a localizer near field monitor may require the location of the azimuth antenna to be modified. The azimuth antenna cannot be sited such that it blocks line-of-sight between the localizer antenna and the localizer field monitor. Due to line-of-sight blockage of the ILS ground check point by the azimuth station, the ILS ground check points may have to be reassessed.

4.1.2.2.2 It is desirable to collocate the DME/P antenna with azimuth antenna whenever possible. However, if the DME/P antenna cannot be collocated with the azimuth antenna due to violation of obstacle limitation requirements, one may consider an offset DME/P site or selecting an alternate collocation configuration (see Attachment C, 7.1.6 and 5 below).

4.1.2.2.3 When possible, the azimuth antenna location can be adjusted to minimize the effect of the azimuth antenna critical area on flight operations. In addition, it may be desirable to maximize the union of azimuth and localizer critical areas. Due to the necessity to collocate the azimuth antenna in close proximity to the localizer antenna, normally one of the antennas will have to be sited in the critical area of the other antenna. For the azimuth antenna critical area, see 4.3. For the localizer critical areas see Attachment C, 2.1.10.

4.1.2.2.4 After a suitable site for the azimuth antenna has been determined, a location for the azimuth antenna field monitor must be found. The azimuth antenna should be monitored as stated in 2.3.5. The preferred location for the field monitor is on the extended runway centre line. However, the monitor pole can be a source of azimuth signal degradation. Therefore, if this monitor location causes unacceptable signal degradation or unsatisfactory monitoring capabilities due to the presence of light lane structures, ILS localizer, etc., an alternate field monitor location may be desirable. This second procedure is only recommended if integral monitoring of the approach radial is available. The following considerations may be helpful in determining a monitor location:

a) It is desirable to have the field monitor as close to the far field as practical to minimize near field effects on the monitor. However, this distance should be limited to avoid false alarms due to vehicle and aircraft traffic between the monitor and azimuth antenna.

b) It is desirable to minimize blockage and distortion of the azimuth signal by the field monitor in the final approach region. The field monitor should be sited as far below the azimuth antenna phase centre as practical.

c) The field monitor offset from the antenna boresight should be limited to maintain the appropriate monitor sensitivity to mechanical stability.

d) The azimuth antenna field monitor should be sited to avoid affecting, or being affected by, the localizer monitor.

4.1.2.3 *Azimuth antenna sited behind ILS localizer*

4.1.2.3.1 The distance between the localizer and the MLS azimuth antenna will depend on obstacle limitation requirements, availability of real estate, presence of a localizer back course, and the desirability of collocating the DME/P antenna with the azimuth antenna. If a localizer back course is being utilized, a distance of at least 30 m (100 ft) between the azimuth and localizer antennas is preferred, and the azimuth antenna must be symmetrically sited on the localizer course centre line. For localizer antennas with a high front-to-back power ratio, it may be possible to reduce the 30 m (100 ft) separation. Once the distance between the azimuth and localizer antennas is known, Figure G-22 can be used to determine the height of the azimuth antenna phase centre relative to the localizer antenna array. To ensure that the azimuth guidance errors due to signal scattering by the ILS localizer remain insignificant (≤0.03 degree) throughout the azimuth coverage volume, point "W"

(Figure G-22) is typically selected to determine the value for variable "X" of Figure G-22. If selection of that point results in an azimuth antenna siting which violates obstacle clearance requirements or a tower-mounted installation that is not feasible, the following actions may be considered:

a) knowing the specific localizer and azimuth equipment involved, an analysis may be performed to determine the height of the azimuth antenna phase centre. Generally, it is recommended that the azimuth antenna phase centre height be selected so that the errors due to signal scattering from the localizer are limited to 0.03 degree. However, that allocation may be increased after considering the contribution from other error sources such as ground and airborne equipment errors, side lobe reflections from buildings, ground reflections, and errors due to interfering aircraft (see Table G-10); and

b) a point on the line W – W_N (Figure G-22) may be selected to determine the value for variable "X". It is preferred that the point selected be as close to point "W" as practical and it must be operationally acceptable for the procedure concerned. Since the error allocation used in the development of this criteria represents a small portion of the total propagation error budget, the azimuth signal might meet the accuracy requirement even below the plane which contains the point selected and the azimuth antenna phase centre. The point to which acceptable azimuth signal exists along the minimum glide path angle may be determined by flight measurements.

4.1.2.3.2 If a localizer near field monitor is present on the extended runway centre line, adjustment of the azimuth antenna phase centre height (PCH) or the localizer monitor height may be required to minimize the effects of the localizer monitor pole on the azimuth signal. However, it is expected that as long as the monitor pole is at or lower than the localizer antenna element height no further adjustment due to the presence of the monitor pole will be required.

4.1.2.4 *Integrated azimuth and localizer configuration*

4.1.2.4.1 *Azimuth antenna integrated under the localizer array*

4.1.2.4.1.1 The first consideration for this configuration is to determine the height of the obstacle clearance surface at the localizer array. The vertical distance between the ground and the obstacle clearance surface at this point should be at least equal to the azimuth antenna height, including the pedestal, plus the required vertical spacing between the top of the azimuth antenna and the localizer antenna element. If this condition is not observed an alternate collocation configuration has to be considered.

4.1.2.4.1.2 Experimental results, from a 24-element log-period localizer, indicate that the vertical spacing between the top of the azimuth antenna and the bottom of the localizer antenna elements has to be at least 0.5 m (1.6 ft) with a spacing of greater than 0.7 m (2.3 ft) being preferred. For localizers with elements having relatively higher coupling, increased vertical spacing is preferred.

4.1.2.4.2 *Azimuth antenna integrated within the localizer array*

4.1.2.4.2.1 For this configuration it may not be necessary to consider the height of the obstacle clearance surface since the azimuth antenna is usually lower than the existing localizer antenna. When integrating the azimuth antenna, some modifications at the localizer antenna are required which may influence the localizer signal-in-space. However, effects depend very much on the type of localizer.

4.1.2.4.2.2 Experimental results, from a two-frequency localizer using dipole antennas, indicate that it is possible to compensate these effects by minor on-site modifications at the localizer antenna. The feasibility of this integrated configuration has to be confirmed for each type of localizer.

4.1.2.4.3 If an ILS near field monitor is present, it is necessary to determine the increase in azimuth antenna phase centre height or decrease in the localizer monitor height required to minimize the effects of the monitor pole on the azimuth signal. In general, satisfactory results may be obtained by siting the azimuth antenna phase centre approximately 0.3 m (1 ft) above the monitor pole. This value is dependent on the localizer monitor design and location.

4.1.2.5 *Offset azimuth*

4.1.2.5.1 At some sites where ILS and MLS are to be collocated, it may be found impossible because of physical restrictions to locate the MLS azimuth antenna in front of or back of the ILS localizer antenna or to integrate it with the ILS localizer antenna. At those sites an advantageous solution could be to offset the MLS and DME/P antennas. The siting information contained in auxiliary data would enable computation in the aircraft of an MLS centre line approach.

4.1.2.5.2 For this collocation configuration, the preferred siting is with the azimuth antenna radome in the localizer array plane (Area 1 of Figure G-21). A minimum distance of 3 m (10 ft) between the azimuth equipment and the localizer array (end element) is preferable.

4.1.2.5.3 If siting the azimuth antenna abeam the localizer is not practical, the azimuth antenna may be sited behind the localizer array plane (Area 2 of Figure G-21). The azimuth antenna offset has to provide at least a 3 m (10 ft) distance and prohibit penetration of the azimuth proportional guidance region by the localizer array.

4.1.2.5.4 If siting the azimuth antenna ahead of the localizer array plane is required, degradation of the localizer signal may result. The region where the least effect of the azimuth equipment on the localizer signal is expected is shown in Area 3 of Figure G-21. The azimuth antenna location can be verified using an azimuth equipment mock-up.

4.2 MLS siting within an approach lighting system

4.2.1 The presence of an approach lighting system serving the opposite end approach will affect the siting of an MLS azimuth antenna. Factors to be considered in proper siting are coverage requirements (see 2.3.2), the need to avoid visual blockage of lights, obstacle limitation requirements, and azimuth signal multipath from the light structures.

4.2.2 These criteria are applicable for typical installations where the approach lights are mounted at essentially a constant height or rise with increasing distance from the runway.

4.2.3 The following guidance is based on MLS siting within existing lighting system structures. It may be more practical to use light structures which do not affect the signal-in-space if these are available.

4.2.4 If the location of an MLS azimuth antenna on extended runway centre line 60 m (200 ft) beyond the far end of the approach lighting system is not possible or practical, it may be sited within the light plane boundaries given the following criteria:

a) in the horizontal plane, the antenna is to be sited on extended runway centre line not closer than 300 m to the runway stop end and as far as possible from the nearest light position toward runway stop end. (This places the back of the azimuth equipment against a light position.)

b) the siting of the azimuth station is to be such that the shadowing of the lights of the approach lighting system is minimized, particularly within decision height boundaries. The azimuth station should not shadow any light(s) other than that located in a centre part of a cross bar or a centre line barrette (see Annex 14, Volume I, Attachment A, 11.3 for further guidance).

4.2.4.1 If the spacing between adjacent light stations is 30 m (100 ft) or more, the phase centre should be at least 0.3 m (1 ft) above light centre line of the closest light station toward runway stop end. This could be relaxed to 0.15 m (0.5 ft), if necessary, if the site is otherwise free of significant multipath problems. This may require the use of an elevated azimuth station.

4.2.4.2 If the spacing between adjacent light stations is less than 30 m (100 ft), the phase centre should be at least 0.6 m (2 ft) above light centre line of the closest light station toward runway stop end.

4.3 Critical and sensitive areas

4.3.1 The occurrence of interference to MLS signals is dependent on the reflection and shadowing environment around the MLS antennas and the antenna beamwidths. Vehicles and fixed objects within 1.7 beamwidths of the receiver location are considered "in-beam" and will cause main lobe multipath interference to the MLS guidance signals. Typically, the ground equipment beamwidths are chosen such that no azimuth in-beam reflections exist along the final approach course and no elevation in-beam multipath exists along the commissioned glide paths. However, movable objects may enter the in-beam multipath regions and cause interfering reflections to or shadowing of the guidance signals to the extent that the quality becomes unacceptable. The areas within which vehicles can cause degraded performance need to be defined and recognized. For the purpose of developing protective zoning criteria, these areas can be divided into two types, i.e. critical areas and sensitive areas:

a) The MLS critical area is an area of defined dimensions about the azimuth and elevation antennas where vehicles, including aircraft, are excluded during all MLS operations. The critical area is protected because the presence of vehicles and/or aircraft inside its boundaries will cause unacceptable disturbance to the guidance signals.

b) The MLS sensitive area is an area extending beyond the critical area where the parking and/or movement of vehicles, including aircraft, is controlled to prevent the possibility of unacceptable interference to the MLS signals during MLS operations. The sensitive area provides protection against interference caused by large objects outside the critical area but still normally within the airfield boundary.

Note 1.— Where disturbance to the guidance signal can occur only at some height above the ground the terms "critical volume" or "sensitive volume" are used.

Note 2.— The objective of defining critical and sensitive areas is to afford adequate protection of the MLS guidance signals. The manner in which the terminology is applied may vary between States. In some States, the term "critical area" is also used to describe the area that is referred to herein as the sensitive area.

4.3.2 Typical examples of critical and sensitive areas that need to be protected are shown in Figure G-23 and Figure G-24. The tabled values associated with Figure G-23 and Figure G-24 apply to approach procedures with elevation angles of three degrees or higher. To assure the signal quality, it is necessary normally to prohibit all entry of vehicles and the taxiing or parking of aircraft within this area during all MLS operations. The critical area determined for each azimuth and elevation antenna should be clearly designated. Suitable signal devices may need to be provided at taxiways and roadways which penetrate the critical area in order to restrict the entry of vehicles and aircraft.

4.3.3 Computer modelling techniques can be employed to calculate the magnitude and duration of signal disturbances caused by structures or by aircraft of various sizes and orientation at differing locations. Typically, the parameters required to operate such a model are the antenna beamwidths and the size, location and orientation of reflecting and shadowing objects. Taking into account the maximum allowable multipath degradation of the signal due to aircraft on the ground, the corresponding critical and sensitive areas can be determined. Such a method has been used in developing Figures G-23 and G-24, after validation of computer models which included comparisons at selected points of computed results with actual field and flight data on parked aircraft interference to the MLS guidance signals.

4.3.4 Control of critical areas and the designation of sensitive areas on the airport proper generally will be sufficient to protect MLS signals from multipath effects caused by large, fixed ground structures. This is particularly significant when considering the size of new buildings. Structures outside the boundaries of the airport generally will not cause difficulty to the MLS signal quality as long as the structures meet obstacle limitation criteria.

4.3.5 The boundary of the protected zone (i.e. the combined critical and sensitive areas) is defined such that interference caused by aircraft and vehicles outside that boundary will not cause errors in excess of typical allowances for propagation effects. The derivation of error allowances to protect centre line approach profiles, as shown in Tables G-10 and G-11 for a "clean" and "complex" propagation environment, proceed as follows. Allowances for equipment errors are subtracted (on a root sum square basis (RSS)) from the system error limits at the approach reference datum (ARD) and the resulting balance of the error budget is available for propagation anomalies. The ground reflection is accommodated at both clean and complex sites, while in complex environments, a margin is reserved to accommodate additional error sources such as support structure vibration, diffracted signals from, for example, approach lighting system (ALS) lights and supports or more intense lateral reflections. Finally, 70 per cent of the remaining error balance is allocated to define the protected zone boundary. Thus, error balances are available to define protected zone boundaries for the extreme cases of a very clean propagation environment with only ground reflections and for a very complex environment with several significant sources of propagation errors.

4.3.6 The MLS critical areas are smaller than the ILS critical areas. Where MLS antennas are located in close proximity to the ILS antennas, the ILS critical areas in most cases will protect the MLS for similar approach paths.

Note.— A reduction of the MLS critical and sensitive areas may be obtained by measurements or analysis which consider the specific environment. It is recommended that samples be taken at least every 15 m (50 ft).

4.3.7 *Azimuth.* For an azimuth antenna supporting an aligned approach along the zero degree azimuth, the region between the azimuth antenna and runway stop end is to be designated as a critical area. The sensitive area of Figure G-23A provides additional signal protection when low visibility landing operations are in progress. In general, the azimuth sensitive area will fall within the runway boundaries such that adequate control can be exercised over all moving traffic to prevent unacceptable interference to the MLS signals. In developing the sensitive area lengths of Table G-12A, it was assumed that the landed B-727 (or B-747) type aircraft has cleared the runway before the landing aircraft reaches a height of 90 m (300 ft) (or 180 m (600 ft) for B-747)). That assumption resulted from consideration of the following factors:

a) 5.6 km (3 NM) separation behind B-747 size aircraft;

b) 3.7 km (2 NM) separation behind B-727 size aircraft;

c) runway occupancy time for the landing aircraft is 30 seconds; and

d) approaching aircraft speed is approximately 220 km/hr (2 NM/min).

4.3.7.1 For an approach azimuth equipment that supports aircraft guidance on the runway surface, an additional sensitive area has to be protected. Due to the low level of power density received by an aircraft on the ground, with the receiving antenna at the lower limit of the coverage, the relative power density of the azimuth beam diffracted by the fin trailing edge of an aircraft leaving or approaching the runway can be significant and create in-beam multipath effects. Typical surfaces in which no aircraft fin should be present are described in Figure G-23B. There are angular sectors starting from the azimuth antenna, with a semi-width of 1.7 beamwidth centred on the runway centre line. The semi-width is limited at a value given in Table G-12E for an azimuth antenna phase centre 1.4 m (4.6 ft) above a flat runway. In case the power density received on the ground is different from what is expected from propagation above a flat ground, some corrections should be applied. It has been determined, for example, that if the actual power density 2.5 m (8 ft) above the runway is 6 dB higher (due for example to azimuth antenna phase centre two times higher), the sensitive area semi-width can be reduced by 6 m (20 ft) (or increased if the power density is 6 dB lower).

4.3.7.2 For an azimuth antenna supporting an offset approach, the critical and sensitive areas will depend on the azimuth antenna location and the approach track orientation relative to the zero degree azimuth. The critical area extends for at least 300 m (1 000 ft) in front of the azimuth antenna. To avoid shadowing while landing operations are in progress, additional protection is to be provided in the form of a sensitive area. Table G-12B gives sensitive area length for use with an offset azimuth installation. When a procedure is along an azimuth other than the zero degree azimuth, the plan view definition has to take into account beam spreading. Figure G-25 shows typical examples.

Note.— This guidance material also applies to an azimuth antenna providing the back azimuth function.

4.3.7.3 *Critical and sensitive areas for the computed centre line approach.* Figure G-26 provides a general illustration of the areas to be protected from uncontrolled movement of ground traffic. The exact shape of that area will depend on the azimuth antenna location, azimuth to threshold distance, decision height, type of aircraft operating at the facility, and the multipath environment.

4.3.7.3.1 In determining the area to be protected, the following steps are appropriate:

a) determine the direction of line AG (Figure G-26) from the azimuth antenna (point A) to the nearest point to the runway centre line where guidance is required (point G);

b) locate point C on line AG at a distance from the azimuth antenna found by entering Table G-12C or G-12D with azimuth to threshold distance, size of the largest aircraft on ground and height of point G on the minimum glide path;

c) line AB has the same length as line AC and lines AC and AB are angularly separated by an amount for in-beam multipath (1.7 beamwidth) and a value for flight path deviation allowance to account for deviations of the approaching aircraft about the nominal approach track;

d) determine the direction of line AF from the azimuth antenna to point F at a height of 300 m (1 000 ft) on the minimum glide path;

e) determine the direction of line AD which is angularly separated by 1.7 BW from line AF;

f) the length of line AD is taken from Table G-12C or G-12D with information on the height of point F; and

g) the area to be protected is bounded by the polygon ABCD.

4.3.7.3.2 Typically, the areas of polygon ABCD in Figure G-26 within at least the first 300 m (1 000 ft) or 600 m (2 000 ft) of the azimuth antenna are to be designated, respectively, as a critical area where B-727 or B-747 size aircraft are operating. The balance of the region is designated as a sensitive area. Where possible, the azimuth antenna is to be offset to the runway side away from that of active taxiways. At facilities where the azimuth antenna is set back less than 300 m (1 000 ft) or located ahead of the runway stop end, a detailed analysis and consideration of the airport layout may support reductions of the area to be protected.

4.3.7.4 *Critical and sensitive areas for MLS/RNAV procedures.* For MLS/RNAV approach procedures, the critical and sensitive areas will require expansion to protect against in-beam multipath in the sectors used. These expanded areas protect approach procedures which are not possible with ILS. The length of the area to be protected depends on the operational minimum height surface selected from Table G-13. Information for determining the area to be protected is given in Figure G-27. For a wide range of profiles, simulation indicated that, where B-727 size aircraft are operating, adequate protection would be afforded if the first 300 m (1 000 ft) of the protected area is designated as a critical area and the remainder as a sensitive area. For B-747 size aircraft, the corresponding length is 600 m (2 000 ft). For higher approach profiles, the length derived from Table G-13 or an equation therein may be less than these values; in this case the entire expanded area is to be designated as a critical area. Increased flexibility may be obtained by performing an analysis considering the specific approach profile and airport environment.

4.3.8 *Elevation.* The elevation critical area to be protected results from the critical volume shown in Figure G-24. Normally no sensitive area is defined for the elevation antenna. As the lower surface of the critical volume normally is well above ground level, aircraft may hold near the elevation antenna as long as the lower boundary of the critical volume is not penetrated.

4.3.8.1 For normal siting of a 1.0 degree beamwidth elevation antenna and flat ground, the fuselage of most aircraft types will fit under the profile lower surface of the critical volume of Figure G-24.

4.3.8.2 For a 1.5 degree beamwidth elevation antenna, limited penetration of the profile lower surface of the critical volume of Figure G-24 by an aircraft fuselage may be tolerated by defining the lower part of the critical volume between 1.5 degrees and 1.7 beamwidth below the minimum glide path as sensitive volume. At sites performing well within tolerance, aircraft may hold in front of the antenna provided:

a) the separation angle between the glide path and the top of the aircraft fuselage is at least 1.5 degrees;

b) the aircraft tail fin does not penetrate the lower surface of the critical volume; and

c) the fuselage is at right angle to the centre line.

4.3.8.3 For MLS/RNAV approach procedures, the plan view of the elevation critical area will require expansion to ensure the elevation signal quality along the nominal approach track (Figure G-28). These expanded areas protect approach procedures which are not possible with ILS. The characteristics of the profile view (Figure G-24) remain unchanged, noting that the lower boundary is referenced to the nominal approach track. This guidance material covers a wide range of profiles. Increased flexibility may be obtained by performing an analysis considering the specific approach profile and airport environment.

5. Operational considerations on siting of DME ground equipment

5.1 The DME equipment should, whenever possible, provide indicated zero range to the pilot at the touchdown point in order to satisfy current operational requirements.

5.1.1 When DME/P is installed with the MLS, indicated zero range referenced to the MLS datum point may be obtained by airborne equipment utilizing coordinate information from the MLS data. DME zero range should be referenced to the DME/P site.

6. Interrelationship of ground equipment monitor and control actions

6.1 The interrelationship of monitor and control actions is considered necessary to ensure that aircraft do not receive incomplete guidance which could jeopardize safety, but at the same time continue to receive valid guidance which may safely be utilized in the event of certain functions ceasing to radiate.

Note.— The interrelationship of ground equipment monitor and control actions is presented in Table G-14.

7. Airborne equipment

7.1 General

7.1.1 The airborne equipment parameters and tolerances included in this section are intended to enable an interpretation of the Standards contained in Chapter 3, 3.11 and include allowances, where appropriate, for:

a) variation of the ground equipment parameters within the limits defined in Chapter 3, 3.11;

b) aircraft manoeuvres, speeds and attitudes normally encountered within the coverage volume.

Note 1.— The airborne equipment includes the aircraft antenna(s), the airborne receiver, the pilot interface equipment and the necessary interconnections.

Note 2.— Detailed "Minimum Performance Specifications" for MLS avionics have been compiled and coordinated by the European Organisation for Civil Aviation Equipment (EUROCAE) and RTCA Inc. ICAO periodically provides to Contracting States current lists of the publications of these organizations in accordance with Recommendations 3/18(a) and 6/7(a) of the Seventh Air Navigation Conference.

7.1.2 *Function decoding*

7.1.2.1 The airborne equipment is to be capable of decoding and processing the approach azimuth, high rate approach azimuth, back azimuth, and approach elevation functions, and data required for the intended operation.

7.1.2.2 In addition, the receiver utilizes techniques to prevent function processing resulting from the presence of function preambles embedded within the data fields of basic and auxiliary data words and scanning beam side lobe radiation. One technique to accomplish this is to decode all function preambles. Following the decode of a preamble, the detection and decoding of all function preambles is then disabled for a period of time corresponding to the length of the function.

7.1.2.3 Range information is decoded independently.

7.1.3 The receiver decodes the full range of angles permitted by the signal format for each function. The guidance angle is determined by measuring the time interval between the received envelopes of the TO and FRO scans. The decoded angle is related to this time interval by the equation given in Chapter 3, 3.11.4.5.

7.1.4 The receiver is capable of normal processing of each radiated function without regard to the position of the function in the transmitted sequences.

7.1.5 If the MLS approach azimuth and back azimuth information is presented on the selector and/or flight instruments, it is to be displayed in magnetic degrees. Receivers in the automatic mode display the relevant information transmitted by the ground station as part of the basic data word 4.

7.1.6 The receiver has the capability for both manual and automatic selection of approach track, elevation angle and back azimuth radial when provided. When in automatic mode, the selection is made as follows.

7.1.6.1 *Approach azimuth* — select the angular reciprocal of the approach azimuth magnetic orientation in basic data word 4.

7.1.6.2 *Elevation angle* — select the minimum glide path in basic data word 2.

7.1.6.3 *Back azimuth* — select the angle of the back azimuth magnetic orientation in basic data word 4.

Note.— The receiver indicates when deviation is referenced to the back azimuth signal.

7.1.7 The MLS airborne receiver system must have an integrity compatible with the overall integrity of MLS which is at least $1 - 1 \times 10^{-7}$ in any one landing.

7.1.8 For airborne equipment used in MLS/RNAV operations the capability is to be provided to unambiguously display the procedure selected.

7.2 Radio frequency response

7.2.1 *Acceptance bandwidth*

7.2.1.1 The receiver should meet acquisition and performance requirements when the received signal frequency is offset by up to plus or minus 12 kHz from the normal channel centre frequency. This figure considers possible ground transmitter offsets of plus or minus 10 kHz and Doppler shifts of plus or minus 2 kHz. The receiver should decode all functions independently of the different frequency offsets of one function relative to another.

7.2.2 *Selectivity*

7.2.2.1 When the receiver is tuned to an inoperative channel and an unwanted MLS signal of a level 33 dB above that specified in Chapter 3, 3.11.4.10.1 for the approach azimuth DPSK is transmitted on any one of the remaining channels, the receiver should not acquire the signal.

7.2.3 *In-channel spurious response*

7.2.3.1 The receiver performance specified in Chapter 3, 3.11.6, should be met when, in addition, interference on the same channel is received at a level not exceeding that specified in Chapter 3, 3.11.4.1.4.

7.2.4 *Interference from out-of-band transmissions*

7.2.4.1 The receiver performance in Chapter 3, 3.11.6 is to be met when, in addition, interference from undesired signals is received at a level not exceeding –124.5 dBW/m^2 at the MLS receiver antenna.

7.3 Signal processing

7.3.1 *Acquisition*

7.3.1.1 The receiver should, in the presence of an input guidance signal which conforms to the requirements of Chapter 3, 3.11.4, acquire and validate the guidance signal before transitioning to the track mode within two seconds along the critical portion of the approach and within six seconds at the limits of coverage.

7.3.1.2 Approach or high-rate approach azimuth guidance acquisitions are not allowed below 60 m (200 ft).

Note.— Acquisition below 60 m (200 ft) may lead to acquisition of false guidance, as the multipath signal level may be above direct signal level. Aircraft power loss or pilot tuning are potential causes of acquisition below 60 m (200 ft). Technical or operational measures should be taken to prevent such acquisition.

7.3.2 *Tracking*

7.3.2.1 While tracking, the receiver should provide protection against short duration (less than one second) large amplitude spurious signals. When track is established, the receiver should output valid guidance information before removing the warning. During track mode, the validation process should continue to operate.

7.3.2.2 After loss of the tracked signal for more than one second, the receiver should provide a warning signal. Within the one-second interval, the guidance information should remain at the last output value.

Note 1.— A validated guidance signal is one that satisfies the following criteria:

a) the correct function identification is decoded;

b) the preamble timing signal is decoded;

c) the "TO" and "FRO" scanning beams or left/right clearance signals are present and symmetrically located with respect to the midpoint time; and

d) the detected beamwidth is from 25 to 250 microseconds.

Note 2.— Guidance signal validation also requires that the receiver repeatedly confirm that the signal being acquired or tracked is the largest signal for at least one second.

7.3.2.3 The aircraft should be on the runway centre line or on the selected azimuth angle at 60 m (200 ft) and the receiver has to be in tracking mode. Below that height, the receiver should keep tracking the approach azimuth or high rate approach azimuth signal as far as this signal is coding an angle within a narrow sector centred on the runway centre line or on the selected azimuth angle even if other signals are up to 10 dB higher than the tracked signal.

7.3.3 *Data functions*

7.3.3.1 *Data acquisition.* Performance in the airborne acquisition of data provided on either the basic or auxiliary data function is broken into two items: the time allowed to acquire the data and the probability of an undetected error in the acquired data.

7.3.3.1.1 At the minimum signal power density, the time to acquire basic data word 2 which is transmitted at a rate of 6.25 Hz does not exceed two seconds on a 95 per cent probability basis. The time to acquire data that are transmitted at a rate of 1 Hz does not exceed 6 seconds on a 95 per cent probability basis.

7.3.3.1.2 In the acquisition process, the receiver decodes the appropriate data words and applies certain tests to ensure that the probability of undetected errors does not exceed 1×10^{-6} at the minimum signal power density for those data requiring this level of integrity. The recommended performance specifications for undetected errors may require additional airborne processing of the data beyond simple decoding. For example, these may be achieved by processing multiple samples of the same data words.

7.3.3.1.3 If the receiver does not acquire data required for the intended operation, a suitable warning is to be provided.

7.3.3.1.4 At the minimum signal power density the time to acquire all data words required to support MLS/ RNAV operations (auxiliary data words B1-B41, A1/B42, A2, A3, A4/B43 and basic data word 6) must not exceed 20 seconds on a 95 per cent probability basis. The MLS/RNAV equipment has to ensure that the probability of undetected errors for this block of data does not exceed 0.5×10^{-9}. This performance assumes a 2 dB improvement in signal to noise. This may be achieved through reduced cable loss, margin or improved receiver sensitivity (see the airborne power budget given in Table G-2). Additionally, with signal levels above this, the acquisition time is intended to be less than 20 seconds.

7.3.3.2 *Data validation.* After acquisition of data, the receiver repeatedly confirms that the data being received are the same as the acquired data. The receiver decodes several consecutive and identical data different from that previously acquired before taking action to accept the new decoded data.

7.3.3.2.1 For data required to support MLS/RNAV operations, the airborne equipment applies the cyclic redundancy check (CRC) to the data to ensure sufficient integrity has been achieved. Data that continue to be received continue to be validated. The MLS/RNAV equipment does not accept a new block of data to be used until it is validated with the CRC.

7.3.3.3 *Data loss.* Within 6 seconds after the loss of basic data or auxiliary data that is transmitted with a maximum interval of 2 seconds or less, the receiver provides a suitable warning and removes the existing data. Within 30 seconds after the loss of auxiliary data other than that referred to above, the receiver provides a suitable warning.

7.3.3.3.1 For data required to support MLS/RNAV operations, the airborne equipment does not remove existing data following validation except under the conditions described in 7.3.3.2.1. An MLS/RNAV data block that has been validated by the CRC is not removed until a new data block has been received with a different ground equipment identification in basic data word 6, a new MLS channel is selected, or power is removed. Additionally the data block is not removed when transitioning to back azimuth coverage.

7.3.4 *Multipath performance*

7.3.4.1 Where the radiated signal power density is high enough to cause the airborne equipment thermal noise contribution to be insignificant, the following specifications should apply for scalloping frequencies between 0.05 Hz and 999 Hz.

7.3.4.1.1 *In-beam multipath.* Multipath signals coded less than two beamwidths from the direct signal and with amplitudes of 3 dB or more below the direct signal should not degrade the angle guidance accuracy output by more than plus or minus 0.5 beamwidth (peak error). The receiver should not lose track when such conditions occur.

7.3.4.1.2 *Out-of-beam multipath.* Multipath signals coded 2 beamwidths or more from the direct signal and with amplitudes of 3 dB or more below the direct signal should not degrade the angle guidance accuracy by more than plus or minus 0.02 beamwidth. For azimuth signals, and within a narrow sector around the centre line or around the selected azimuth angle, multipath signals with amplitudes of up to 10 dB above the direct signal and not distorting the direct beam shape as specified in Chapter 3, 3.11.5.2.1.3, should not degrade the angle guidance accuracy by more than plus or minus 0.02 beamwidth. The receiver should not lose track when such conditions occur.

7.3.5 *Clearance*

7.3.5.1 The airborne equipment should provide clearance guidance information whenever the antenna is in the presence of a valid clearance guidance signal.

7.3.5.2 When the decoded angle indication is outside the proportional guidance sector defined in Appendix A, Table A-7, the MLS guidance signal should be interpreted as clearance guidance.

7.3.5.3 When clearance pulses are transmitted, the receiver shall be able to process the range of pulse envelope shapes that may appear in the transition between clearance and scanning beam signals. A particular pulse envelope is dependent on the receiver position, scanning antenna beamwidth, and the relative phase and amplitude ratios of the clearance and scanning beam signals as shown in Figure G-8. The receiver is also required to process rapid changes of indicated angle of the order of 1.5 degrees (peak amplitude) when outside the proportional guidance limits.

7.3.5.4 In receivers with the capability to select or display azimuth angle guidance information greater than plus or minus 10 degrees, the proportional coverage limits in basic data must be decoded and used to preclude use of erroneous guidance.

7.4 Control and output

7.4.1 *Approach azimuth and approach elevation deviation scale factor*

7.4.1.1 *Approach azimuth.* When the approach azimuth deviation information is intended to have the same sensitivity characteristics as ILS, it is a function of the "approach azimuth antenna to threshold distance", as supplied by the basic data, in accordance with the following table:

Approach azimuth antenna to threshold distance (ATT)	Nominal course width
0 – 400 m	± 3.6 degrees
500 – 1 900 m	± 3.0 degrees
2 000 – 4 100 m	$\pm \arctan\left(\frac{105}{\text{ATT}}\right)$ degrees
4 200 – 6 300 m	± 1.5 degrees

7.4.1.2 *Approach elevation.* The deviation information is a continuous function of the manually or automatically selected elevation angle (Θ) in accordance with the formula Θ/4 = half a nominal glide path width, so that glide path widths are nominally in accordance with the following examples:

Selected elevation angle (degrees)	Nominal glide path width (degrees)
3	± 0.75
7.5	± 1.875

Note.— These sensitivity characteristics are applicable to elevation angles up to 7.5 degrees.

7.4.2 *Angle data output filter characteristics*

7.4.2.1 *Phase lags.* To assure proper autopilot interface, the receiver output filter, for sinusoidal input frequencies, does not include phase lags which exceed:

a) 4 degrees from 0.0 to 0.5 rad/s for the azimuth function; and

b) 6.5 degrees from 0.0 to 1.0 rad/s and 10 degrees at 1.5 rad/s for the elevation function.

7.4.3 *Minimum glide path.* When there is capability of selecting the approach elevation angle, a suitable warning is to be issued if the selected angle is lower than the minimum glide path as provided in basic data word 2.

7.4.4 *Status bits.* A suitable warning is to be provided when the function status bits in acquired basic data indicate that the respective function is not being radiated or is being radiated in test mode.

7.5 Use of back azimuth guidance for missed approaches and departures

7.5.1 *Usable back azimuth angles*

7.5.1.1 Flight test results indicated that back azimuth angles of up to ±30 degrees from the runway centre line can be used for navigation guidance for missed approaches and departures. With appropriate interception techniques, larger angle offsets might be acceptable up to the flyable limits of back azimuth coverage. Departure guidance can utilize the back azimuth signal for centre line guidance throughout the take-off roll and initial departure. It is intended that a turn to intercept the back azimuth is initiated at an operationally acceptable altitude, and the prescribed procedure is protected according to appropriate obstacle clearance criteria.

7.5.2 *Back azimuth deviation scale*

7.5.2.1 The scaling of back azimuth deviations must be sufficient to support back azimuth departures and missed approaches not aligned with the approach azimuth, as well as missed approach and departure tracks aligned with the approach azimuth. Deviation scaling effects are most pronounced when manoeuvring to intercept a back azimuth. Very sensitive scaling will cause lateral overshoots and limit flyability of the signal, whereas very insensitive scaling will result in the large consumption of airspace. A nominal course width sensitivity of ±6 degrees provides for an acceptable interception of back azimuth during missed approach and departure.

7.5.3 *Approach azimuth to back azimuth switching*

7.5.3.1 Following initiation of a missed approach using back azimuth guidance, the guidance must switch from approach azimuth to back azimuth. The switching, either automatically or manually, from approach azimuth to back azimuth guidance is intended to provide continuous flyable guidance throughout the missed approach sequence. Switching is not expected to occur until the aircraft receives a validated back azimuth signal, but it is intended to occur before the approach azimuth guidance becomes too sensitive to fly. Switching based on loss of approach azimuth may not occur until the aircraft is very close to the approach azimuth antenna resulting in unflyable guidance. Switching based only on loss of elevation guidance may occur prior to the aircraft receiving a valid back azimuth signal. However, switching might be based on loss of elevation guidance once the back azimuth signal has been validated. Automatic switching at or near the mid-point between azimuth antennas will provide a method which results in continuous guidance during the transition. The mid-point switching methodology may require the use of DME information by the MLS receiver. Precautions are to be taken so that approach to back azimuth switching does not automatically occur unless a missed approach has been initiated.

8. Operations at the limits of and outside the promulgated MLS coverage sectors

8.1 The limits of the azimuth proportional guidance sectors are transmitted in basic data words 1 and 5. These limits do not indicate the maximum flyable MLS approach and back azimuth angles which will normally be at some angle inside these limits. For example, for an approach azimuth providing a proportional guidance sector of ±40 degrees, flyable MLS approach azimuth angles with a full course width of ±3 degrees will exist to approximately ±37 degrees. For a back azimuth, flyable back azimuth angles with full course width will exist to within 6 degrees of the proportional guidance sector limits.

8.2 The basic MLS antenna designs should preclude the generation of unwanted signals outside coverage. Under some unusual siting conditions, MLS signals might be reflected into regions outside the promulgated coverage with sufficient strength to cause erroneous guidance information to be presented by the receiver. As in current procedure the implementing authority would specify operational procedures based on the use of other navaids to bring the aircraft into landing system coverage without transiting the area of concern or may publish advisories which alert pilots to the condition. In addition, the MLS signal format permits the use of two techniques to further reduce the probability of encountering erratic flag activity.

8.2.1 If the undesired MLS signals are reflections and if operational conditions permit, the coverage sector can be adjusted (increased or decreased) such that, at the receiver, either the direct signal is greater than any reflection or the reflector is not illuminated. This technique is referred to as coverage control.

8.2.2 Out-of-coverage indication signals can be transmitted into the out-of-coverage sectors for use in the receiver to ensure a flag whenever an undesired angle guidance signal is present. This is accomplished by transmitting an out-of-coverage indication signal into the region which is greater in magnitude than the undesired guidance signal.

8.3 If it is operationally required to confirm the selected MLS channel outside the promulgated coverage sectors of the MLS, it is intended that this confirmation be derived from the identification of the associated DME. MLS status information is not available outside the promulgated MLS coverage sectors.

9. Separation criteria in terms of signal ratios and propagation losses

9.1 Geographical separation

9.1.1 The separation criteria are provided in 9.2 and 9.3 as desired signal-to-noise ratios and when combined with appropriate propagation losses allow evaluation of MLS C-Band frequency assignments as regards on-channel and adjacent channel interference. When selecting frequencies for MLS facilities, a similar criteria for the DME/P element or an associated DME/N as provided in Attachment C to this Part need to be considered.

9.2 Co-frequency requirements

9.2.1 Co-frequency MLS channel assignments should be made to preclude the acquisition of DPSK preambles of an undesired co-channel facility. The required level of the undesired signal is less than minus 120 dBm, which is 2 dB below a sensitive MLS airborne system, as shown below:

— receiver sensitivity	=	–112 dBm
— margin for aircraft antenna gain above minimum	=	–6 dBm
		–118 dBm

Considering the system power budget in Table G-1, which shows the minimum signal level at the aircraft is required to be at least minus 95 dBm, the minus 120 dBm requirement is achieved by placing the undesired co-channel at a geographic separation which exceeds the radio horizon distance at any point in the promulgated coverage sector of the desired facility.

Note.— The DPSK signal requires more protection than the scanning beam so that by limiting the undesired co-channel signal to minus 120 dBm, interference from the scanning beam is negligible.

9.3 Adjacent frequency requirements

9.3.1 Considering the absence of requirements on transmitter spectrum characteristics for the first and second adjacent channels, the ground stations operating at these frequencies should be placed at a geographical separation that exceeds the radio horizon distance at any point in the promulgated coverage sector of the desired facility.

Note.— Where for specific reasons (for example, ILS/MLS/DME pairing channels) the first or second adjacent channels need to be assigned, a less conservative method to assure receiver protection is to guarantee that the minimum SNR values as quoted in 3.11.6.1.4 are available at any point in the promulgated coverage sector of the desired facility while the undesired facility is transmitting.

9.3.2 For the third and subsequent adjacent channels, the ground stations operating at these frequencies should be placed at a geographical separation which guarantees that the minimum SNR values as quoted in Chapter 3, 3.11.6.1.4 are available at any point in the promulgated coverage sector of the desired facility while undesired facilities are transmitting.

9.3.2.1 If there is no undesired MLS transmission situated at less than 4 800 m from any point of the promulgated coverage, the –94.5 dBW/m² maximum power of Chapter 3, 3.11.4.1.4.2 compared to the minimum power density of Chapter 3, 3.11.4.10.1 assures that the SNR minimum values will be met. No constraints are anticipated.

9.3.2.2 If there is an undesired MLS transmission situated at less than 4 800 m from a point of the promulgated coverage, the maximum power produced by this transmission and measured, during transmission time for angle and data signals, in a 150 kHz band centred on the desired nominal frequency has to be assessed taking into account the frequency separation, spectrum performances and antenna pattern of the transmitter and the appropriate propagation losses. This maximum power has then to be compared to the desired angle and data level to check that the minimum SNR values defined in 3.11.6.1.4 are met. If not, another channel offering a larger frequency separation has to be assigned in order to reduce this maximum undesired power taking benefit of the spectrum characteristic of the transmitter.

9.4 Development of frequency planning criteria

9.4.1 The controlling factor when developing adjacent channel frequency planning criteria is the radiated spectrum from the MLS ground station. When developing frequency planning criteria for the third adjacent channel and above, ideally, the radiated spectrum output of individual MLS ground stations should be considered. However it may be possible in a geographic region to use a generic MLS transmitter mark which meets the requirements of that region.

10. Material concerning MLS installations at special locations

10.1 MLS facility performance throughout the coverage volume

10.1.1 It is recognized that at some locations the requirements for MLS specified in Chapter 3, 3.11 cannot be met throughout the whole volume of coverage due to environmental effects on the signal. It is expected that at such locations the requirements of Chapter 3, 3.11 are to be met at least in the guidance sector for all published instrument procedures to a defined point beyond which the MLS guidance is not used for intended operations. To assist appropriate authorities with the initial appraisal of the suitability of such individual MLS installations for the intended operations, relevant coverage restrictions need to be promulgated.

11. Integrity and continuity of service — MLS ground equipment

11.1 Introduction

11.1.1 This material is intended to provide description of the integrity and continuity of service objectives of MLS ground equipment and to provide guidance on engineering design and system characteristics of this equipment. The integrity and continuity of service must of necessity be known from an operational viewpoint in order to decide the operational application which an MLS could support.

11.1.2 It is generally accepted, irrespective of the operational objective, that the average rate of a fatal accident during landing, due to failures or shortcomings in the whole system, comprising the ground equipment, the aircraft and the pilot, should not exceed 1×10^{-7}. This criterion is frequently referred to as the global risk factor.

11.1.3 In the case of Category I operations, while minimum standards of accuracy and integrity are required during the early stages of landing, most of the responsibility for assuring that the above objective is not exceeded is vested in the pilot. In Category III operations, the same objective is required but must now be inherent in the whole system. In this context it is of the utmost importance to endeavour to achieve the highest level of integrity and continuity of service of the ground equipment. Integrity is needed to ensure that an aircraft on approach will have a low probability of receiving false guidance; continuity of service is needed to ensure that an aircraft in the final stages of approach will have a low probability of being deprived of a guidance signal.

11.1.4 It is seen that various operational requirements correspond to varied objectives of integrity and continuity of service. Table G-15 identifies and describes four levels of integrity and continuity of service that are applicable for basic procedures where DME is not a critical element.

11.2 Achievement and retention of integrity and continuity of service levels

11.2.1 An integrity failure can occur if radiation of a signal which is outside specified tolerances or which is incorrect (in the case of digital data) is either unrecognized by the monitoring equipment or the control circuits fail to remove the faulty signal. Such a failure might constitute a hazard if it results in a gross error.

11.2.2 Clearly not all integrity failures are hazardous in all phases of the approach. For example, during the critical stages of the approach, undetected failures producing significant path following error (PFE) are of special significance whereas an undetected loss of clearance or identification signals would not necessarily produce a hazardous situation. The criterion in assessing which failure modes are relevant must however include all those deleterious fault conditions which are not unquestionably obvious to the automatic flight system or pilot.

11.2.3 It is especially important that monitors be designed to provide fail-safe operation through compliance with the Standards of Chapter 3, 3.11.5.2.3 and 3.11.5.3.3. This often requires a rigorous design analysis. Monitor failures otherwise may permit the radiation of erroneous signals. Some of the possible conditions which might constitute a hazard in operational performance Categories II and III are:

a) an undetected fault causing a significant increase in PFE as seen by an approaching aircraft;

b) an undetected error in the minimum glide path, transmitted in basic data word 2;

c) an undetected error in the TDM synchronization resulting in overlap; and

d) loss of power that increases CMN to unacceptable limits.

11.2.4 The highest order of protection is required against the risk of undetected failures in the monitoring and associated control system. This would be achieved by careful design to reduce the probability of such occurrences to a low level and by carrying out periodic checks on the monitor system performance at intervals which are determined by the design analysis. Such an analysis can be used to calculate the level of integrity of the system in any one landing. The following formula can be applied to certain types of MLS and provides an example of the determination of system integrity, *I*, from a calculation of the probability of transmission of undetected erroneous radiation, *P*.

$$I = 1 - P$$

$$P = \frac{T^2}{\alpha_1 \alpha_2 M_1 M_2}$$

where:

I = integrity;

P = the probability of a concurrent failure in transmitter and monitor systems resulting in undetected erroneous radiation;

M_1 = transmitter mean time between failure (MTBF)

M_2 = MTBF of the monitoring and associated control system;

$\frac{1}{\alpha_1}$ = ratio of the rate of failure in the transmitter resulting in the radiation of an erroneous signal to the rate of all transmitter failures;

$\frac{1}{\alpha_2}$ = ratio of the rate of failure in the monitoring and associated control system resulting in inability to detect an erroneous signal to the rate of all monitoring and associated control system failures; and

T = period of time (in hours) between checks on the monitoring and associated control system.

This example formula would be applicable to a non-redundant monitor design in which a single value of *T* applies to all elements of the monitoring and associated control system.

11.2.5 With regard to integrity, since the probability of occurrence of an unsafe failure within the monitoring or control equipment is extremely remote, to establish the required integrity level with a high degree of confidence would necessitate an evaluation period many times that needed to establish the equipment MTBF. Such a protracted period is unacceptable and therefore the required integrity level can only be predicted by rigorous design analysis of the equipment. However, a degree of confidence in the analysis can be achieved by demonstration of independence between the transmitter and monitor functions. The predicted performances of the transmitter and monitor can then be evaluated independently, resulting in more feasible evaluation periods.

11.2.6 The MTBF and continuity of service of equipment is governed by basic construction characteristics and by the operating environment. The basic construction characteristics include the failure rate of the components of the equipment and the physical relationship of the components. Failure rate (1/MTBF) and continuity of service are not always directly related because not all equipment failures will necessarily result in an outage, e.g. an event such as a failure of a transmitter resulting in the immediate transfer to a standby transmitter. The manufacturer is expected to provide the details of the design to allow the MTBF and the continuity of service to be calculated. Equipment design has to employ the most suitable engineering techniques, materials, and components, and rigorous inspection should be applied during manufacture. It is essential to ensure that equipment is operated within the environmental conditions specified by the manufacturer.

11.2.7 The design continuity of service is expected to exceed that given in 12.4 by as large a margin as is feasible. The reasons for that are as follows:

a) the MTBF experienced in an operational environment is often worse than that determined by the design calculations due to the impact of operational factors;

b) the continuity of service objectives given in 12.4 are minimum values to be achieved in an operational environment. Any improvement in performance above these values enhances the overall safety of the landing operation;

c) a margin between the continuity of service objective and that achieved is required in order to reduce the chance of falsely rejecting the suitability of an equipment for a particular level of service due to statistical uncertainty.

Note.— The Level 3 and 4 continuity of service values include a factor that accounts for the pilot's capability to avoid a fatal accident in the event of a loss of guidance. It is particularly desirable to reduce this factor to the maximum extent practical by achieving the best possible continuity of service for Level 3 and 4 equipment.

11.2.8 Experience has shown that there is often a difference between the calculated continuity of service and that experienced in an operational environment both because the performance of the equipment may be different from the calculated value and because of the impact of operational factors, i.e. airport environment, inclement weather conditions, power availability, quality and frequency of maintenance, etc. For these reasons, it is recommended that the equipment MTBF and continuity of service be confirmed by evaluation in an operational environment. Continuity of service may be evaluated by means of mean time between outages, where an outage is defined as any unanticipated cessation of signal-in-space. It is calculated by dividing total facility up-time by the number of operational failures. For integrity and continuity of service Levels 2, 3 or 4, the evaluation period is to be sufficient to determine achievement of the required level with a high degree of confidence. To determine whether the performance record of an individual equipment justifies its assignment to Levels 2, 3 or 4 requires judicious consideration of such factors as:

a) the performance record and experience of system use established over a suitable period of time;

b) the average achieved MTBO established for this type of equipment; and

c) the trend of the failure rates.

11.2.9 The minimum acceptable confidence level for acceptance/rejection is 60 per cent. Depending on the service level of the MLS, this may result in different evaluation periods. To assess the influence of the airport environment, a minimal evaluation period of one year is typically required for a new type of installation at that particular airport. It may be possible to reduce this period in cases where the operating environment is well controlled and similar to other proven installations. Subsequent installation of the same type of equipment under similar operational and environmental conditions may follow different evaluation periods. Typically, these minimal periods for subsequent installations are for Level 2, 1 600 hours, for Level 3, 3 200 hours and for Level 4, at least 6 400 hours. Where several identical systems are being operated under similar conditions, it may be possible to base the assessment on the cumulative operating hours of all the systems. This will result in a reduced evaluation period.

11.2.10 During the evaluation period it should be decided for each outage if it is caused by a design failure or if it is caused by a failure of a component due to its normal failure rate. Design failures are, for instance, operating components beyond their specification (overheating, overcurrent, overvoltage, etc., conditions). These design failures should be dealt with such that the operating condition is brought back to the normal operating condition of the component or that the component is replaced with a part suitable for the operating conditions. If the design failure is treated in this way, the evaluation may continue and this outage is not counted, assuming that there is a high probability that this design failure will not occur again. The same applies to outages due to any causes which can be mitigated by permanent changes to the operating conditions.

11.2.11 A suitable method to assess the behaviour of a particular installation is to keep the records and calculate the average MTBO over the last five to eight failures of the equipment. A typical record of this method is given in Figures G-35A and G-35B.

11.2.12 During the equipment evaluation, and subsequent to its introduction into operational service, records have to be maintained of all equipment failures or outages to confirm retention of the desired continuity of service.

Note.— If an equipment requires redundant or standby units to achieve the required continuity of service, an arrangement such as that described in 11.3.4 is required to assure that the standby equipment is available when needed.

11.3 Additional considerations concerning continuity of service and integrity

11.3.1 The stringent requirement for integrity and continuity of service essential for Category III operations requires equipment having adequate assurance against failures. Reliability of the ground equipment must be very high, so as to ensure that safety during the critical phase of approach and landing is not impaired by a ground equipment failure when the aircraft is at such a height or attitude that it is unable to take safe corrective action. A high probability of performance within the specified limits has to be ensured. Facility reliability in terms of MTBF clearly has to be related on a system basis to the probability of failure which may affect any characteristic of the total signal-in-space.

11.3.2 The following configuration is an example of a redundant equipment arrangement that is likely to meet the objectives for integrity and continuity of service Levels 3 and 4. The azimuth facility consists of two transmitters and an associated monitor system performing the following functions:

a) monitoring of operation within the specified limits of the main transmitter and antenna system by means of majority voting among redundant monitors; and

b) monitoring the standby equipment.

11.3.2.1 Whenever the monitor system rejects one of the equipments the facility continuity of service level will be reduced because the probability of cessation of signal consequent on failure of other equipment will be increased. The change of performance must be automatically indicated at remote locations.

11.3.2.2 An identical monitoring arrangement to the azimuth is used for the elevation facility.

11.3.3 In the above example, the equipment would include provision to facilitate monitoring system checks at intervals specified by the manufacturer, consequent to his design analysis, to ensure attainment of the required integrity level. Such checks, which can be manual or automatic, provide the means to verify correct operation of the monitoring system including the control circuitry and changeover switching system. It is desirable to perform these checks in such a way that there is no interruption to operational service. The advantage of implementing an automatic monitor integrity test is that it can be accomplished more frequently, thereby achieving a higher level of integrity.

11.3.4 Interruption of facility operation due to primary power failures is avoided by the provision of suitable standby supplies, such as batteries or “no-break” generators. Under these conditions, the facility should be capable of continuing in operation over the period when an aircraft may be in the critical stages of the approach. Therefore the standby supply should have adequate capacity to sustain service for at least two minutes.

11.3.5 Warnings of failures of critical parts of the system, such as the failure of the primary power supply, must be given at the designated control points if the failure affects operational use.

11.3.6 In order to reduce failure of equipment that may be operating near its monitor tolerance limits, it is useful for the monitor system to include provision to generate a pre-alarm warning signal to the designated control point when the monitored parameters reach a limit equal to a value on the order of 75 per cent of the monitor alarm limit.

11.3.7 Protection of the integrity of the signal-in-space against degradation, which can arise from extraneous electromagnetic interference falling within the MLS frequency band or from reradiation of MLS signals, must be considered.

11.3.8 A field monitor can provide additional protection by providing a warning against exceeding path following error limits due to physical movement of the MLS antenna or by protecting against faults in the integral monitor.

11.3.9 In general, monitoring equipment design is based on the principle of continuously monitoring the radiated signals-in-space at specific points within the coverage volume to ensure their compliance with the Standards specified at Chapter 3, 3.11.5.2.3 and 3.11.5.3.3. Although such monitoring provides to some extent an indication that the signal-in-space at all other points in the coverage volume is similarly within tolerance, this is largely inferred. It is essential therefore to carry out rigorous inspections at periodic intervals to ensure the integrity of the signal-in-space throughout the coverage volume.

11.3.10 An equipment arrangement similar to that at 11.3.2, but with no transmitter redundancy, and the application of the guidance outlined in 11.3.5, 11.3.6, 11.3.7, 11.3.8, and 11.3.9, would normally be expected to achieve the objectives for integrity and continuity of service for level 2.

12. Classification of MLS approach azimuth, elevation and DME ground facilities

12.1 The classification system as described in the following paragraphs, is intended to identify in a concise way essential information to be used by instrument procedure designers, operators and air traffic services regarding the performance of a particular MLS installation. The information is to be published in the aeronautical information publication (AIP).

12.2 The information concerning MLS facility performance should comprise:

a) the limits of the azimuth proportional guidance sector;

b) the vertical guidance limit;

c) the availability of the guidance signal along the runway; and

d) the reliability of the guidance signal (azimuth, elevation and DME).

12.3 The classification system, containing information of a particular MLS facility, is defined using the following formats:

a) *Azimuth proportional guidance sector limits.* This field identifies for a particular MLS the azimuth proportional guidance sector limits as defined in basic data word 1. Two values separated by a colon (XX:YY) indicate the sector limits as seen from the approach direction; the first value being the sector limit left of the zero degree azimuth and the second value being the sector limit right of the zero degree azimuth.

b) *Vertical guidance limit.* This field, located directly after the azimuth limit (format: XX:YY/ZZ m (or XX:YY/ ZZ ft)), represents the minimum height (in metres or feet) above threshold on the final approach segment along the minimum glide path (MGP) to which the system conforms to the signal characteristics specified in Chapter 3, 3.11.

c) *Runway guidance.* The character D or E (as defined in section 1 of Attachment G) represents the point to which the azimuth guidance along the runway conforms to the signal characteristics specified in Chapter 3, 3.11 (format: XX:YY/ZZ/E). If the guidance signal along the runway does not conform to the above-mentioned characteristics, then a dash (—) is used in the format.

d) *Reliability of the guidance signal.* The character 1, 2, 3 or 4 indicates the level of integrity and continuity of service of the guidance signal (Table G-15). The character A, which is placed after the Level 3 or 4 designation, indicates that the elevation and DME/P objectives are equivalent to the azimuth objectives in accordance with Note 6 of Table G-15 (format: XX:YY/ZZ/E/4).

Note 1.— Where DME is not required for the intended MLS operations, there is no need to include DME/P reliability in MLS classification.

Note 2.— Where an improved elevation and/or DME/P reliability is required according to Note 6 of Table G-15 for the intended MLS/RNAV operations, the improved elevation and/or DME/P reliability is to be included in the MLS classification.

12.3.1 Any degradation of the signal below Annex 10 Standards, or below previously published performance, should be promulgated by the appropriate authority (Chapter 2, 2.1.2 and 10 above).

12.4 Table G-15 gives continuity of service and integrity objectives for MLS basic and MLS/RNAV operations.

Note.— In relation to specific MLS operations it is intended that the level of integrity and continuity of service would typically be associated as follows:

1) Level 2 is the performance objective for MLS equipment used to support low visibility operations when guidance for position information in the landing phase is supplemented by visual cues. This level is a recommended objective for equipment supporting Category I operations;

2) Level 3 is the performance objective for MLS equipment used to support operations which place a high degree of reliance on MLS guidance for positioning through touchdown. This level is a required objective for equipment supporting Category II and IIIA operations; and

3) Level 4 is the performance objective for MLS equipment used to support operations which place a high degree of reliance on MLS guidance throughout touchdown and roll-out. This level basically relates to the needs of the full range of Category III operations.

12.5 The following example of MLS facility classification:

40:30/50 ft/E/4A

denotes a system with:

a) a proportional guidance sector of 40 degrees left and 30 degrees right of the zero-degree azimuth;

b) vertical guidance down to 50 ft above threshold;

c) roll-out guidance to MLS point E; and

d) integrity and continuity of service Level 4 with elevation and DME/P objectives equivalent to azimuth.

13. Computed centre line approaches

13.1 General

13.1.1 Computed centre line approaches considered below are based on a computed path along a runway centre line where the azimuth antenna is not sited on the extended runway centre line. The simplest form of a computed centre line approach is one in which the nominal track is parallel to the zero-degree azimuth. In order to conduct MLS/RNAV operation, a greater capability than that available in the basic MLS receiver is required.

13.1.2 Computed centre line approaches to the MLS primary runway are conducted to the runway whose relationship to the MLS ground equipment is identified in the auxiliary data words.

13.1.3 When the final segment is contained in the MLS coverage volume, computed centre line approaches can be conducted along a straight final segment on a descent gradient down to the decision height (DH). Computed centre line approaches may result in decision heights that are above decision heights achievable with aligned MLS approaches.

13.2 Computed centre line approach error budget

13.2.1 RTCA (RTCA/DO-198) has described a total system error budget for MLS area navigation (RNAV) equipment. This error budget includes contributions due to:

a) ground system performance;

b) airborne sensor performance;

c) ground system geometry effects;

d) MLS/RNAV computer computational error; and

e) flight technical error (FTE).

13.2.2 The composite of the above errors with the exclusion of FTE is referred to as total position error. Within 3.7 km (2 NM) of the MLS approach reference datum the permissible total lateral position error for MLS/RNAV equipment at a position 60 m (200 ft) above the MLS datum point on a 3-degree elevation angle and a runway length of 3 000 m (10 000 ft), is 15 m (50 ft) (see the note below). Similarly, the permissible total vertical position error is 3.7 m (12 ft) at the same position. A portion of the total position error budget has been reserved for the MLS/RNAV computer performance (computational error). Within 3.7 km (2 NM) of the MLS approach reference datum, the portion of the error budget reserved for computational error is ±0.6 m (2 ft) both laterally and vertically. The results presented in 13.5 are dependent on meeting this computational accuracy requirement.

13.2.3 Using root sum square methodology the permissible total lateral position error, exclusive of MLS/RNAV computer performance, is slightly less than ±15 m (50 ft). Similarly, the permissible total vertical position error, exclusive of computational error is slightly less than ±3.7 m (12 ft). Hence, the combined error due to ground system performance, airborne sensor performance and ground system geometry effects is not expected to exceed ±15 m (50 ft) laterally and 3.7 m (12 ft) vertically at the described location. Using this information and assumptions about ground and airborne sensor performance, the maximum permissible azimuth and elevation antenna offsets (geometry effects) from the runway centre line can be obtained.

13.2.4 The CMN does not exceed ±7.3 m (24 ft) laterally and ±1.9 m (6.3 ft) vertically, or the linear equivalent of ±0.1 degree, whichever is less. The linear values are based on nominal antenna sitings (azimuth antenna to threshold distance of 3 300 m (11 000 ft) and datum point to threshold distance of 230 m (760 ft)), with a 3-degree elevation angle. Within 3.7 km (2 NM) of the MLS approach reference datum, the portion of the CMN budget reserved for computational error is 1.1 m (3.5 ft) laterally and 0.6 m (2.0 ft) vertically.

Note.— All errors represent 95 percentile errors.

13.3 Siting and accuracy considerations

13.3.1 Theoretical and operational analysis has shown that several factors will impact the amount of azimuth antenna lateral offset that can be permitted and still obtain lateral and vertical position accuracy identified in 13.2.

13.3.2 *Distance between azimuth and elevation antennas*

13.3.2.1 For a given azimuth antenna offset, a short azimuth to elevation distance results in relatively large azimuth angles at positions near the approach reference datum. As a result, the error contribution from the DME is large, and the lateral accuracy may degrade unacceptably. At a runway where a large azimuth antenna offset and a short azimuth to elevation distance exist, use of DME/P rather than DME/N may be required to achieve the required lateral accuracy.

13.3.3 *Azimuth accuracy*

13.3.3.1 The azimuth antenna offset limits presented in 13.5 are based on the ±6 m (20 ft) azimuth path following error accuracy specification (see Chapter 3, 3.11.4.9.4). The recommended ±4 m (13.5 ft) azimuth accuracy specification would permit larger azimuth antenna offsets and still obtain required computed position accuracy at DH. Azimuth angle accuracy is assumed to degrade in accordance with Chapter 3, 3.11.4.9.

13.3.4 *DME accuracy*

13.3.4.1 Smaller errors in position determination result when DME/P equipment is used and the final approach segment is contained within 9.3 km (5 NM) of the MLS approach reference datum. There are two DME/P final approach mode accuracy standards in this region. Resulting azimuth antenna offset values when using DME/P as presented in 13.5, are based on final approach mode Standard 1 accuracy. Larger azimuth antenna offset values may be permissible if DME/P equipment meeting final approach mode Standard 2 accuracy is used. DME/P final approach mode Standard 1 ranging accuracy is assumed to degrade in accordance with Chapter 3, 3.5.3.1.3.4 and Table B. DME/N is assumed to degrade in accordance with Chapter 3, 3.5.3.1.3.2.

13.3.5 *Use of elevation information in the lateral position computation*

13.3.5.1 Generally, lateral position computation that excludes elevation information will be sufficient for computed centre line approaches to the primary runway. If elevation information is not used in lateral computation, the lateral error increases. This error increases with azimuth angle, height and decreasing range. Permissible azimuth antenna offsets presented in 13.5 are reduced if elevation information is not used in the lateral computation. Elevation angle accuracy is assumed to degrade in accordance with Chapter 3, 3.11.4.9.

13.4 Equipment considerations

13.4.1 Performance of airborne sensors, MLS ground equipment and MLS/RNAV avionics implementation influence the range of application of computed centre line approaches. Information presented in 13.5 is based on the following equipment considerations.

13.4.2 *Airborne sensors*

13.4.2.1 It is assumed the receiver will decode all auxiliary data words required for MLS computed centre line approaches unless the information contained in the data words is available from other avionics sources with the same accuracy and integrity as required for auxiliary data. Digital MLS angle data and range data are needed for computing lateral and vertical position. Angle data quantization is 0.01 degrees. Range quantization is 2.0 m (0.001 NM).

13.4.3 *RNAV computations*

13.4.3.1 No assumption is made about where the RNAV position computations are made. A portion of the computed centre line approach error budget has been reserved for computation error. This permits flexible algorithm implementation.

13.4.4 *Permissible azimuth antenna offset calculation techniques*

13.4.4.1 RTCA (RTCA/DO-198, Appendix D) has identified several different position determination algorithms. Different algorithms can handle different ground equipment configurations. The algorithm designed to handle any ground equipment geometry is the RTCA case 12 algorithm. Permissible antenna offset values were obtained using Monte Carlo simulation techniques. The results were also obtained using a direct analytical method. The analytical method uses geo-metric transformations of the maximum MLS angle and range errors to determine system performance. The Monte Carlo technique through the emulation of an MLS/RNAV system is a statistical method used to determine system performance.

13.4.4.2 *Possible restriction in position determination.* Depending on ground equipment geometry a region of possible multiple solutions to the position determination algorithm may exist. This region of multiple solutions is dependent on the locations of the elevation antenna and DME transponder relative to the runway and computed approach path. The most pronounced effect occurs when the DME transponder lies in the region between the approach path DH point and the elevation antenna. The position ambiguities can be resolved when the DME transponder is located behind the elevation antenna when viewed from the approach direction. When the DME transponder is located in front of the elevation antenna it may not be possible to resolve the position ambiguity.

13.4.5 *Ground equipment geometry*

13.4.5.1 The nominal ground equipment geometry in terms of the relative position of the ground components is depicted in Figure G-29. The DME/P transponder is assumed to be collocated with the approach azimuth antenna. When DME/P ground equipment is not available, the DME/N transponder is assumed to be located between the MLS approach azimuth and elevation antennas.

13.4.5.2 Because of the relatively large error induced by the DME/N, the location of the DME/N transponder has no significant influence on the calculated permissible azimuth antenna offset. This permits DME/N siting over a large area between the azimuth and elevation antennas. Similarly, the offset of the elevation antenna will have little effect.

13.5 Permissible approach azimuth antenna offset positions for computed centre line approaches to the primary runway

13.5.1 *DME results*

13.5.1.1 The maximum azimuth offset represents, for a given set of conditions, the largest offset that does not exceed the computed centre line approach error budget identified in 13.2. DME/P results are presented as a function of the azimuth to elevation distance. The permissible azimuth antenna offsets with DME/P are presented in Figure G-30.

13.5.1.2 For a given azimuth to elevation distance, the azimuth antenna can be sited any place in the shaded area and the resulting computed centre line approach meet requirements of 13.2.

13.5.1.3 Results were obtained when DME/N ranging accuracies are used. These results are presented in Figure G-31.

13.6 Low visibility approaches

13.6.1 *Possible applications*

13.6.1.1 The possibility of low visibility computed centre line applications may be limited to operations on the primary instrument runway because of the geometry considerations involved in achieving adequate accuracy. Primary instrument runway applications where computed centre line capability would be useful are those where the azimuth is offset from the runway centre line due to a severe siting restriction. There may be such azimuth offset applications where low visibility operations would be considered beneficial.

13.6.1.2 The expected airborne implementation for such low visibility computed centre line approaches would use non-computed elevation guidance (assuming the elevation ground antenna is sited normally) and lateral guidance derived from a combination of azimuth (including MLS siting data contained in the basic and auxiliary data functions) and range from the DME/P transponder.

13.6.2 *Airborne system performance*

13.6.2.1 Safety-critical software associated with the guidance function for non-computed low visibility approaches mainly involves the MLS receiver. For computed centre line approaches, the DME interrogator and the navigation computations must also be considered. The safety-critical software for these functions will have to be designed, developed, documented and evaluated.

13.6.2.2 The necessary algorithms are relatively simple and do not pose any certification difficulty. However, experience with flight management system (FMS) computers indicates that it would be difficult to certify a safety-critical function implemented within an existing FMS. Current FMS architectures are not partitioned to allow separate certification of different functions to different levels of criticality and the size and complexity of an FMS precludes safety-critical certification of the entire FMS computer. Consequently, alternatives to FMS implementation can be considered for computed centre line capability intended for low visibility applications (e.g. incorporation within the autopilot or within the MLS receiver). These alternatives would provide output guidance with the same output characteristics as a normal straight-in approach.

13.6.3 *Ground system performance*

13.6.3.1 Based on the implementation assumed in 13.3.5, elevation guidance would be used in exactly the same manner as for basic MLS approaches. Consequently, the elevation ground equipment integrity and continuity of service objectives would remain unchanged from those already given in Table G-15. For lateral guidance, the integrity and continuity of service

objectives given in Table G-15 for azimuth would apply to the azimuth and DME combined, resulting in objectives for both that are more stringent than those needed for basic MLS operations. However, a low visibility computed centre line operation to a 30 m (100 ft) DH may be achieved by the use of ground equipment meeting the level 4 objectives contained in Table G-15.

13.6.4 *Accuracy*

13.6.4.1 MLS/RNAV will support computed paths to Category I decision heights for the primary runway given siting limitations as identified in Figure G-30. In addition, under certain conditions MLS/RNAV may provide sufficient accuracy to support Category II and III approaches. In order to accomplish this, the airborne implementation is as stated in 13.6.1.2.

13.6.4.2 The error budgets for Category II and III procedures are the following. For Category III, the lateral accuracy requirements are the same as the MLS approach azimuth accuracies specified at the approach reference datum. These requirements are ±6 m (20 ft) for PFE and ±3.2 m (10.5 ft) for CMN (Chapter 3, 3.11.4.9.4). For Category II the lateral requirements are obtained by splaying the allowed Category III values from the approach reference datum out to the Category II decision height of 30 m (100 ft). The equations used to compute these values (in metres) are:

$$PFE = 6 \times \frac{(D_{\mathrm{AZ-ARD}} + R)}{D_{\mathrm{AZ-ARD}}}$$

$$CMN = 3.2 \times \frac{(D_{\mathrm{AZ-ARD}} + R)}{D_{\mathrm{AZ-ARD}}}$$

$$R = \frac{DH_{\mathrm{CatII}} - DH_{\mathrm{CatIII}}}{\tan\theta}$$

where:

$D_{\mathrm{AZ-ARD}}$ = distance between approach azimuth antenna and approach reference datum (threshold)
R = distance between $\mathrm{DH_{Cat\ II}}$ and $\mathrm{DH_{Cat\ III}}$
θ = elevation angle

As an example, for a 3 000 m (10 000 ft) runway and a 3-degree elevation with an approach azimuth setback of 300 m (1 000 ft), a Category III decision height of 15 m (50 ft) and a Category II decision height of 30 m (100 ft), the following values are obtained:

$D_{\mathrm{AZ\text{-}ARD}}$ = 3 300 m
R = 286 m
$PFE_{\mathrm{DH\ Cat\ II}}$ = 6.5 m (21.3 ft)
$CMN_{\mathrm{DH\ Cat\ II}}$ = 3.5 m (11.5 ft)

13.6.4.3 The computed centre line capability down to Category II decision height will not necessarily support autoland operations as the guidance may not be provided down to the runway and in the runway region. Also, the more stringent error tolerances for Category II/III will result in more constraints in antenna siting than for Category I. Primarily this will constrain the lateral offset of the approach azimuth from runway centre line.

13.7 Computed centre line approaches to parallel secondary runways

13.7.1 A secondary runway as defined here is a runway that has a different geometric relationship than the one contained in the auxiliary data A words. Computed centre line approaches to a parallel secondary runway are approaches along a computed path on the extended runway centre line which is not aligned with an MLS azimuth radial and/or elevation angle but is parallel to the primary runway centre line.

13.7.2 The material in this section provides guidance on permissible runway geometries for computed centre line approaches to a parallel secondary runway to decision heights of 60 m (200 ft). The material in this section is based on the theoretical application of MLS and DME/P (Standard 1) SARPs. The error budget used is the conservative error budget identified in 13.2, and relaxations of this error budget are described in 13.7.6.1.

13.7.3 *Runway geometry considerations*

13.7.3.1 Figure G-32 presents the runway and equipment geometry. The secondary runway location is established laterally with the use of runway spacing in metres. Negative values represent secondary runway locations left of the primary runway. The longitudinal position of the secondary runway threshold is referred to as threshold stagger relative to the primary runway. Negative values represent threshold stagger forward of the primary runway threshold.

13.7.4 *Large runway spacing considerations*

13.7.4.1 Additional considerations are necessary for computed centre line approaches to widely spaced parallel runways. These considerations include:

a) adequate signal coverage to DH for some parallel runway geometries may require the use of an elevation antenna with more than ±40 degrees of horizontal coverage;

b) the critical areas around the MLS antennas may have to be increased for these operations; and

c) these operations require the use of elevation guidance below the primary runway minimum glide path.

13.7.5 *Runway geometry*

13.7.5.1 Figure G-33 shows permitted runway spacings and threshold staggers for the secondary runway. It represents results for a 3 000 m (10 000 ft) primary runway. The geometrics change marginally with primary runway length. The shaded area represents results obtained using existing MLS and DME/P (Standard 1) SARPs and the error budget identified in 13.2. To use Figure G-33, enter the values for secondary runway spacing and threshold stagger. If the resulting point lies within the shaded area a computed centre line approach to a 60 m (200 ft) DH on a 3-degree elevation is possible.

Note.— The circular region near the 1 200 m runway threshold stagger is due to the upper limit of elevation guidance used. This region is not expected to present any practical operational limitations.

13.7.6 *Extensions to the runway geometries*

13.7.6.1 Flight and ground tests have shown that the shaded area can be expanded with the following additional considerations:

a) an angular expansion is possible by utilizing existing elevation guidance outside the minimum specified azimuth proportional guidance sector. Elevation guidance for this angular expansion must be verified; and

b) a radial expansion is possible with a slight relaxation of the vertical error budget to 4.9 m (16 ft). This relaxation is still very conservative and equates to 66 per cent of the equivalent ILS error budget (7 m (24.1 ft)).

13.7.6.2 An example of the use of Figure G-33 is presented by point A. Using the foregoing expansions, a computed centre line approach to a secondary runway is possible for a –1 400 m runway spacing and +200 m threshold stagger.

14. Application of Table G-15 service level objectives for MLS/RNAV operations

14.1 MLS/RNAV procedures discussed below can be conducted with ground equipment meeting integrity and continuity of service objectives identified in Table G-15. Many of these operations may be accomplished with MLS ground equipment meeting Level 2 objectives only. Further a majority of the procedures may not require positive guidance during the discontinued approach/missed approach procedure. Where procedural means cannot provide the required obstacle clearance along an unguided discontinued approach/missed approach, some form of secondary guidance will be required. The accuracy requirements of the secondary guidance system will be determined by the nature of the obstacle-rich environment.

14.1.1 In those rare cases where an MLS/RNAV procedure is in an obstacle-rich environment, the calculated obstacle exposure time (OET) may require a higher level of equipment type than that required for landing.

14.1.2 *Determination of critical segments*

14.1.2.1 The following terms are used to determine the length of the critical segments of an MLS/RNAV procedure.

Obstacle-rich environment. An environment where it is not possible to construct an unguided discontinued approach/missed approach using procedural means. Secondary guidance will be required to achieve a climb to minimum sector altitude.

Critical segment. A segment where an unguided discontinued approach/missed approach would expose the aircraft to an obstacle.

Obstacle exposure time (OET). The time interval required to fly the critical segment of an MLS/RNAV procedure. This time is used to establish the required level of service of the non-aircraft guidance equipment.

14.1.2.2 In order to determine OET the following procedure can be followed (see Figure G-34):

a) determine if there is an obstacle-rich environment by aligning the unguided discontinued approach/missed approach surface with any potential heading that may be used during an unguided discontinued approach/missed approach from the MLS/RNAV procedure;

b) determine whether there is a procedural means for avoiding the obstacle without the need for secondary guidance; and

c) determine the OET as the period of time during which the obstacle is within the unguided discontinued approach/ missed approach surface, while there is no procedural means for avoiding the obstacle.

14.2 Computed centre line operations

14.2.1 When conducted to the primary runway, these operations require the airborne system to compute lateral guidance only. Vertical guidance is provided by the elevation function directly. The airborne equipment providing the lateral guidance must have the same integrity as the MLS receiver is required to have for basic MLS operations being conducted to an equivalent decision height. Computed centre line operations conducted to a decision height below a Category I decision height require that the DME have an accuracy, integrity and continuity of service level applicable to the type of operation.

14.2.2 When conducted to a parallel secondary runway these operations require the airborne system to compute both lateral and vertical guidance. Decision heights may be limited by the MLS signal coverage and computed guidance accuracy achievable.

14.2.3 MLS ground equipment meeting Level 2 service objectives may be sufficient for computed centre line operations when:

a) the operation is conducted to Category I decision heights or higher; and

b) reference path construction and computed lateral and vertical guidance by the airborne equipment meets the same level of integrity as the MLS receiver for a basic MLS operation.

14.2.4 When computed centre line operations are conducted below Category I decision heights, the service level of the MLS ground equipment must be commensurate with the decision height used. Identically the airborne equipment providing computed guidance must have the same integrity as the basic receiver would have to conduct MLS basic operations to an equivalent decision height.

14.3 MLS curved path procedures

14.3.1 These procedures must be examined carefully to determine the level of service needed for the ground equipment. With MLS curved path operations the most stringent requirement for integrity and continuity of service may be based on a portion of the flight path prior to decision height. In these situations, the integrity and continuity of service objectives of the MLS ground equipment cannot be predicated solely on the category of the landing. For operations where the obstacle clearance requirements place a high degree of reliance on guidance accuracy, the ground equipment integrity and continuity of service objectives can be determined using the risk tree method described in Attachment A. The following requirements must also be considered:

a) airborne equipment must have the capability of reference path construction and computed vertical and lateral guidance with positive control in the turns; and

b) airborne integrity and continuity of service must be consistent with the degree of reliance on the guidance accuracy necessary to safely execute the procedure.

15. Application of simplified MLS configurations

15.1 While SARPs for basic and expanded MLS configurations state a single signal-in-space standard, a simplified MLS configuration is defined in Chapter 3, 3.11.3.4 to permit the use of MLS in support of performance-based navigation operations.

15.2 Relaxed coverage, accuracy, and monitor limits do not exceed those specified in Chapter 3, 3.1 for a Facility Performance Category I ILS. Such a simplified MLS configuration is capable of supporting Category I operations with significant reductions in size of azimuth and elevation antennas. Further reductions in equipment complexity can be achieved as the CMN requirement is waived for applications in support of approach and landing operations which do not require autopilot coupling.

15.3 The simplified MLS is compatible with the basic and expanded MLS configurations.

Table G-1. System power budget
(±40° azimuth coverage; 0–20° vertical coverage; 37 km (20 NM) range)

Power budget items (Note 1)	Approach azimuth function					Elevation function			Back azimuth function			
			Angle BW				Angle BW			Angle BW		
	DPSK	Clearance	1°	2°	3° (Note 2)	DPSK	1°	2°	DPSK	1°	2°	3°
Signal required at aircraft (dBm)	–95.0	–93.5	–91.2	–85.2	–81.7	–95.0	–93.5	–90.0	–95.0	–93.5	–88.2	–84.7
Propagation loss (dB) (Notes 3, 4)	139.0	139.0	139.0	139.0	139.0	138.1	138.1	138.1	133.9	133.9	133.9	133.9
Probabilistic losses (dB):												
a) Polarization	0.5	0.5	0.5	0.5	0.5	0.5	0.5	0.5	0.5	0.5	0.5	0.5
b) Rain	2.2	2.2	2.2	2.2	2.2	2.2	2.2	2.2	1.3	1.3	1.3	1.3
c) Atmospheric	0.3	0.3	0.3	0.3	0.3	0.3	0.3	0.3	0.3	0.3	0.3	0.3
d) Horizontal multipath	3.0	3.0	0.5	0.5	0.5	3.0	–	–	3.0	0.5	0.5	0.5
e) Vertical multipath	2.0	2.0	2.0	2.0	2.0	2.0	1.0	1.0	2.0	2.0	2.0	2.0
Root – sum – square (RSS) total a) through e) (dB)	4.3	4.3	3.1	3.1	3.1	4.3	2.5	2.5	3.9	2.5	2.5	2.5
Horizontal and vertical pattern loss (dB)	–	1.0	2.0	2.0	2.0	–	6.0	6.0	–	2.0	2.0	2.0
Monitor margin (dB)	1.5	1.5	1.5	1.5	1.5	1.5	1.5	1.5	1.5	1.5	1.5	1.5
Antenna gain (dB) (Note 5)	–	–13.3	–23.0	–20.0	–18.0	–	–20.8	–17.8	–	–23.0	–20.0	–18.0
Net power gain at coverage extremes (dB)	–7.3	–	–	–	–	–7.3	–	–	–7.3	–	–	–
Required transmitter power (dBm)	42.5	39.0	31.4	40.4	41.1	41.6	33.8	40.3	37.1	23.4	31.7	37.2
Example 20 watt transmitter (dBm)	43.0	43.0	43.0	43.0	43.0	43.0	43.0	43.0	43.0	43.0	43.0	43.0
Transmitter power margin (dB)	0.5	4.0	11.6	2.6	1.9	1.4	9.2	2.7	5.9	19.6	11.3	5.8

Notes.—

1. Losses and antenna gains are representative values.
2. High data rate for 3° azimuth beamwidth will reduce required transmitter power by 4.8 dB.
3. Distance to azimuth antenna taken as 41.7 km (22.5 NM).
4. Distance to back azimuth antenna taken as 23.1 km (12.5 nautical miles).
5. The required transmitter power can be reduced by using higher efficiency antennas.

Table G-2. Airborne power budget

Power budget items	DPSK	Clearance	Approach azimuth function				Elevation function		Back azimuth function		
			Angle BW				Angle BW		Angle BW		
			1°	2°	3°	3° (Note 1)	1°	2°	1°	2°	3°
IF SNR (dB) required for:											
a) 72% decode rate	5.0	—	—	—	—	—	—	—	—	—	—
b) 0.1° CMN (Note 2)	—	—	8.8	14.8	18.3	13.5	—	10.0	—	11.8	15.3
c) Acquisition	—	6.5	—	—	—	—	6.5	—	6.5	—	—
Noise power in 150 kHz IF bandwidth (dBm)	–122.0	–122.0	–122.0	–122.0	–122.0	–122.0	–122.0	–122.0	–122.0	–122.0	–122.0
Signal power required at IF (dBm)	–117.0	–115.5	–113.2	–107.2	–103.7	–108.5	–115.5	–112.0	–115.5	–110.2	–106.7
Noise figure (dB)	11	11	11	11	11	11	11	11	11	11	11
Cable loss (Note 3) (dB)	5	5	5	5	5	5	5	5	5	5	5
Airborne antenna gain (dBi)	0	0	0	0	0	0	0	0	0	0	0
Margin (dB)	6	6	6	6	6	6	6	6	6	6	6
Signal required at aircraft (dBm)	–95.0	–93.5	–91.2	–85.2	–81.7	–86.5	–93.5	–90.0	–93.5	–88.2	–84.7

Notes.—
1. High rate approach azimuth function.
2. 0.2° CMN for the back azimuth function.
3. Provides for either front or rear antenna cable losses in typical installations. Additional losses (up to 11 dB) may be accommodated by air carrier class avionics.

Table G-3. Sample RNAV procedures for MLS installation on Runway 23R
(see Figure G-15)

Procedure name	Procedure type	Runway	Missed approach	Number of way-points	AAZ or BAZ
KASEL-1-A	Approach	23R	Yes	4	AAZ
NELSO-1-B	Approach	23R	Yes	3	AAZ
N/A	Missed approach	23R	N/A	2	AAZ
SEMOR-1-C	Approach	26 (Note)	No	2	AAZ
LAWSO-6-D	Departure	23R	N/A	3	BAZ

Note.— Runway 26 is a secondary runway. The virtual azimuth to way-point distance is 3 000 m.

Table G-4. Sample way-point information for MLS/RNAV procedures

Basic indicator	Validity indicator	Route indicator	Way-point number	X (metres)	Y (metres)	Z (metres)	Notes
KASEL	1	A	4	8 200	–9 094	N/A	No Z
			3	9 954	–5 336	789	PFAF
			2	6 556	0	344	No Z, No Y
			1	259	0	16.8 (Note)	Threshold
NELSO	1	B	3	9 742	6 499	819	PFAF
			2	6 556	0	344	Shared with KASEL
			1	259	0	16.8 (Note)	Shared with KASEL
N/A (missed approach)	N/A	N/A	2	–7 408	0	N/A	No Z, No Y
			1	0	0	N/A	No Z, No Y
SEMOR	1	C	2	5 567	–5 276	346	PFAF
			1	159	–2 401	16	Threshold
LAWSO	6	D	3	–8 018	3 057	N/A	No Z
			2	–4 964	0	N/A	No Z, No Y
			1	0	0	N/A	No Z, No Y

Note.— This value is the threshold crossing height, referenced to ground level at threshold. The height of the threshold with respect to the MLS datum point is given in auxiliary word A2.

Table G-5. Example of B1 and B39 data word assignments

Data word title	Data word	Bit numbers	Data item	Value	Coding
Approach azimuth map/CRC	B1	I_{21-24}	Number of procedure descriptors	3	1100
		I_{25-30}	Last approach azimuth database word	11	001011 (Note 2)
		I_{31-62}	CRC code	See Table G-9	
		I_{63}	Word B42 transmitted	No	0
		I_{64}	Word A4 transmitted	Yes	1
		I_{65}	Word B43 transmitted	No	0
		I_{66-69}	Spare	zeros	0000
Back azimuth map/CRC (Note 3)	B39	I_{21-24}	Number of procedure descriptors	1	1000
		I_{25-30}	First back azimuth database word	36	100100 (Note 2)
		I_{31-62}	CRC code	See Table G-9	
		I_{63}	Word B43 transmitted	No	0
		I_{64-68}	Spare	zeros	00000
		I_{69}	Back azimuth map/CRC indicator	map/CRC	1

Notes.—
1. Bit coding is indicated with the lower bit number on the left.
2. Data word addresses are as defined in Table A-9, Appendix A with the most significant bit first.
3. Facility without back azimuth database may employ all words up to B39 for the approach azimuth database.

Table G-6. Example of procedure descriptor word assignments

Data item	Bit numbers	Procedure descriptor data words							
		KASEL B2		NELSO B3		SEMOR B4		LAWSO B36	
		Value	Coded	Value	Coded	Value	Coded	Value	Coded
Basic indicator (first character)	I_{21}-I_{25}	K	11010	N	01110	S	11001	L	00110
Second character	I_{26}-I_{30}	A	10000	E	10100	E	10100	A	10000
Third character	I_{31}-I_{35}	S	11001	L	00110	M	10110	W	11101
Fourth character	I_{36}-I_{40}	E	10100	S	11001	O	11110	S	11001
Fifth character	I_{41}-I_{45}	L	00110	O	11110	R	01001	O	11110
Validity indicator	I_{46}-I_{49}	1	1000	1	1000	1	1000	6	0110
Route indicator	I_{50}-I_{54}	A	10000	B	01000	C	11000	D	00100
Runway number	I_{55}-I_{60}	23	111010	23	111010	26	010110	23	111010
Runway letter	I_{61}-I_{62}	R	10	R	10	–	00	R	10
Procedure type	I_{63}	APP	0	APP	0	APP	0	DEP	1
First way-point index	I_{64}-I_{69}	1	100000	4	001000	5	101000	1	100000

Note.— Bit coding is indicated with the lower bit number on the left.

Table G-7. Example of way-point assignments for MLS/RNAV approach procedures

Procedure name	Data word	Bit numbers	Data item	Value	Value	WP Index
KASEL	B5	I_{21-35}	WP 4 – X coordinate	8 200 m	110000010011000	1
		I_{36}	Y coordinate follows	Yes	1	
		I_{37-51}	WP 4 – Y coordinate	–9 094 m	000001111011001	
		I_{52}	Z coordinate follows	No	0	
		I_{53-55}	Next segment/field identifier	straight = 0	000	
		I_{56-69}	WP 3 – X coordinate (first 14 bits)	9 954 m	00001100111100	2
	B6	I_{21}	WP 3 – X coordinate (last bit)		0	
		I_{22}	Y coordinate follows	Yes	1	
		I_{23-37}	WP 3 – Y coordinate	–5 336 m	001001000001001	
		I_{38}	Z coordinate follows	Yes	1	
		I_{39-51}	WP 3 – Z coordinate	789 m	1001111011000	
		I_{52-54}	Next segment field/identifier	curved = 1	100	
		I_{55-69}	WP 2 – X coordinate	6 556 m	100000000101000	3
	B7	I_{21}	Y coordinate follows	No	0	
		I_{22}	Z coordinate follows	Yes	1	
		I_{23-35}	WP 2 – Z coordinate	344 m	0011110110000	
		I_{36-38}	Next segment/field identifier	5	101	
		I_{39-44}	Threshold way-point height	16.8 m	010001	
		I_{45-50}	Missed approach index	7	111000	
NELSO		I_{51-65}	WP 3 – X coordinate	9 742 m	101110110111000	4
		I_{66}	Y coordinate follows	Yes	1	
		I_{67-69}	WP 3 – Y coordinate (first 3 bits)	6 499 m	110	
	B8	I_{21-32}	WP 3 – Y coordinate (last 12 bits)		101111001000	
		I_{33}	Z coordinate follows	Yes	1	
		I_{34-46}	WP 3 – Z coordinate	819 m	1110100111000	
		I_{47-49}	Next segment/field identifier	shared = 3	110	
		I_{50-55}	Next way-point index	3	110000	
SEMOR		I_{56-69}	WP 2 – X coordinate (first 14 bits)	5 567 m	11111110000100	5
	B9	I_{21}	WP 2 – X coordinate (last bit)		0	
		I_{22}	Y coordinate follows	Yes	1	
		I_{23-37}	WP 2 – Y coordinate	–5 276 m	101100000001001	
		I_{38}	Z coordinate follows	Yes	1	
		I_{39-51}	WP 2 – Z coordinate	346 m	0111110110000	
		I_{52-54}	Next segment/field identifier	straight = 0	000	
		I_{55-69}	WP 1 – X coordinate	159 m	011111000000000	6

Procedure name	Data word	Bit numbers	Data item	Value	Value	WP Index
	B10	I_{21}	Y coordinate follows	Yes	1	
		I_{22-36}	WP 1 – Y coordinate	–2 401 m	010101011100001	
		I_{37}	Z coordinate follows	Yes	1	
		I_{38-50}	WP 1 – Z coordinate	16 m	0010111000000	
		I_{51-53}	Next segment/field identifier	6	011	
		I_{54-59}	Virtual azimuth distance	3 000 m	011110	
Missed Approach		I_{60-69}	WP 2 – X coordinate (first 10 bits)	–7 408 m	0111001011	7
	B11	I_{21-25}	WP 2 – X coordinate (last 5 bits)		01001	
		I_{26}	Y coordinate follows	No	0	
		I_{27}	Z coordinate follows	No	0	
		I_{28-30}	Next segment/field identifier	straight = 0	000	
		I_{31-45}	WP 1 – X coordinate	0	000000000000000	8
		I_{46}	Y coordinate follows	No	0	
		I_{47}	Z coordinate follows	No	0	
		I_{48-50}	Next segment/field identifier	6	011	
		I_{51-69}	Spare	zeros	000...000	

Note.— Bit coding is indicated with the lower bit number on the left.

Table G-8. Example MLS/RNAV departure way-point assignments

Procedure name	Data word	Bit numbers	Data item	Value	Coding	WP Index
LAWSO	B37	I_{21-35}	WP 3 – X coordinate	–8 018 m	001111000011001	1
		I_{36}	Y coordinate follows	Yes	1	
		I_{37-51}	WP 3 – Y coordinate	3 057 m	010101010010000	
		I_{52}	Z coordinate follows	No	0	
		I_{53-55}	Next segment/field identifier	curved = 1	100	
		I_{56-69}	WP 2 – X coordinate (first 14 bits)	–4 964 m	11001001111000	2
	B38	I_{21}	WP 2 – X coordinate (last bit)		1	
		I_{22}	Y coordinate follows	No	0	
		I_{23}	Z coordinate follows	No	0	
		I_{24-26}	Next segment/field identifier	straight = 0	000	
		I_{27-41}	WP 1 – X coordinate	0	000000000000000	3
		I_{42}	Y coordinate follows	No	0	
		I_{43}	Z coordinate follows	No	0	
		I_{44-46}	Next segment/field identifier	Last WP = 6	011	
		I_{47-69}	Spare	zeros	000...000	

Note.— Bit coding is indicated with the lower bit number on the left.

Table G-9. Example of complete MLS/RNAV database

	Bit position															
	1	2			3		4			5		6			7	
Word	3456	7890	1234	5678	9012	3456	7890	1234	5678	9012	3456	7890	1234	5678	9012	3456
A1	0000	0111	0011	0010	0101	1101	1001	1000	0010	0110	0010	0100	0000	0000	0000	0100
A2	0000	1010	0011	0010	0111	0000	0010	0111	1001	1000	0000	0000	0110	0000	0001	1010
A3	0000	1101	0011	0010	0001	0111	0110	0110	0011	0000	0100	0110	0111	0000	0111	1101
A4	0001	0011	0011	0010	0111	0000	0010	0000	0000	0000	0001	0000	0000	0000	0110	1000
B1	0000	0111	1100	0010	1100	0111	0100	0011	1111	0000	0001	1001	0001	0000	0010	0111
B2	0000	1010	1101	0100	0011	0011	0100	0011	0100	0100	0011	1010	1001	0000	0111	1001
B3	0000	1101	0111	0101	0000	1101	1001	1111	0100	0010	0011	1010	1000	0100	0000	1101
B4	0001	0011	1100	1101	0010	1101	1110	0100	1100	0110	0001	0110	0001	0100	0011	1110
B5	0001	0100	1100	0001	0011	0001	0000	0111	1011	0010	0000	0001	1001	1110	0000	0001
B6	0001	1001	0100	1001	0000	0100	1110	0111	1011	0001	0010	0000	0001	0100	0011	0000
B7	0001	1110	0100	1111	0110	0001	0101	0001	1110	0010	1110	1101	1100	0111	0110	1001
B8	0010	0010	1011	1100	1000	1111	0100	1110	0011	0110	0001	1111	1100	0010	0000	0011
B9	0010	0101	0110	1100	0000	0100	1101	1111	0110	0000	0001	1111	0000	0000	0101	0110
B10	0010	1000	1010	1010	1110	0001	1001	0111	0000	0001	1011	1100	1110	0101	1110	0100
B11	0010	1111	0100	1000	0000	0000	0000	0000	0000	1100	0000	0000	0000	0000	0110	0100
B36	1001	0001	0011	0100	0011	1011	1001	1111	0011	0001	0011	1010	1011	0000	0010	0101
B37	1001	0110	0011	1100	0011	0011	0101	0101	0010	0000	1001	1001	0011	1100	0100	0000
B38	1001	1011	1000	0000	0000	0000	0000	0000	1100	0000	0000	0000	0000	0000	0001	1101
B39	1001	1100	1000	1001	0010	1011	0010	0001	1000	1011	1111	0010	0000	0000	1010	1001
B40	1010	0000	0111	0011	0110	0110	0110	1000	0101	0110	0101	0010	0010	1010	0110	1001
B41	1010	0111	1100	0000	0000	0110	1101	1001	0111	0000	0000	0000	0000	0000	0001	1111
B44	1011	0011	1110	1010	0101	1000	0100	1010	0000	1110	1110	1000	1000	0000	0001	1011
B45	1011	0100	1111	1001	0000	0000	0000	1101	0010	0100	0000	0000	0010	1111	0000	0011
BDW6	0011	0011	1000	1000	0011											

Note.— Preamble bits I_1 to I_{12} are not shown.

Table G-10. Error allocations for MLS azimuth critical and sensitive area development

(distances are in metres (feet); error values are in degrees)

		Azimuth to threshold distance metres (feet)							
		1 830 (6 000)	2 140 (7 000)	2 440 (8 000)	2 750 (9 000)	3 050 (10 000)	3 360 (11 000)	3 660 (12 000)	3 960 (13 000)
	Antenna beamwidth	2°	2°	2°	2°	2°	1°	1°	1°
a)	System budget for PFN = 3.5 m (11.5 ft)	0.1098	0.0941	0.0824	0.0732	0.0659	0.0599	0.0549	0.0507
b)	Ground equipment error allowance	0.0120	0.0120	0.0120	0.0120	0.0120	0.0120	0.0120	0.0120
c)	Ground reflection allowance	0.0400	0.0400	0.0400	0.0400	0.0400	0.0200	0.0200	0.0200
d)	Clean site error allocation $[d = \sqrt{a^2 - b^2 - c^2}]$	0.1016	0.0844	0.0710	0.0601	0.0510	0.0552	0.0497	0.0450
e)	ALS/monitor pole allowance	0.0300	0.0300	0.0300	0.0300	0.0300	0.0150	0.0150	0.0150
f)	Complex site error allocation $[f = \sqrt{d^2 - e^2}]$	0.0970	0.0788	0.0643	0.0521	0.0412	0.0531	0.0474	0.0424
g)	70 per cent complex site error allocation	0.0679	0.0552	0.0450	0.0365	0.0288	0.0372	0.0332	0.0297
a)	System budget for CMN = 3.2 m (10.5 ft)	0.1003	0.0859	0.0752	0.0668	0.0602	0.0547	0.0501	0.0463
b)	Ground equipment error allowance	0.0315	0.0270	0.0236	0.0210	0.0189	0.0172	0.0158	0.0145
c)	Airborne equipment error allowance	0.0150	0.0150	0.0150	0.0150	0.0150	0.0150	0.0150	0.0150
d)	Allowance for structure vibration	0.0320	0.0320	0.0320	0.0320	0.0320	0.0320	0.0320	0.0320
e)	Clean/complex site error allocation $[e = \sqrt{a^2 - b^2 - c^2 - d^2}]$	0.0884	0.0735	0.0620	0.0527	0.0449	0.0380	0.0319	0.0261
f)	70 per cent complex site error allocation	0.0619	0.0515	0.0434	0.0369	0.0314	0.0266	0.0223	0.0183

Table G-11. Error allocations for MLS elevation critical area development
(all allocation values are in degrees)

Antenna beamwidth		1.5°	1.0°
a)	System budget for PFN = 0.4 m (1.3 ft)	0.083	0.083
b)	Ground equipment error allowance	0.010	0.010
c)	Sidelobe reflections allowance	0.055	0.037
d)	Clean site error allocation $\left[d = \sqrt{a^2 - b^2 - c^2}\right]$	0.061	0.073
e)	Vertical diffractions (field monitors)	0.030	0.030
f)	Lateral reflections allowance	0.031	0.043
g)	Complex site error allocation $\left[g = \sqrt{d^2 - e^2 - f^2}\right]$	0.043	0.051
h)	70% complex site error allocation	0.030	0.036
a)	System budget for CMN = 0.3 m (1.0 ft)	0.064	0.064
b)	Ground equipment error allowance	0.032	0.032
c)	Airborne equipment error allowance	0.010	0.010
d)	Sidelobe reflections allowance	0.015	0.010
e)	Allowance for structure vibration	0.010	0.010
f)	Clean/complex site error allocation $\left[f = \sqrt{a^2 - b^2 - c^2 - d^2 - e^2}\right]$	0.052	0.053
g)	70% complex site error allocation	0.036	0.037

Table G-12A. Typical azimuth sensitive area lengths
(aligned approach along zero degree azimuth, see 4.3.7)
(distances are in metres (feet); values in both units have been rounded)

Azimuth to threshold distance	2.0° beamwidth					1.0° beamwidth		
	1 830 (6 000)	2 140 (7 000)	2 440 (8 000)	2 750 (9 000)	3 050 (10 000)	3 350 (11 000)	3 660 (12 000)	3 960 (13 000)
B-747, clean site	490 (1 600)	520 (1 700)	580 (1 900)	610 (2 000)	640 (2 100)	670 (2 200)	700 (2 300)	700 (2 300)
B-727, clean site	300 (1 000)	300 (1 000)	300 (1 000)	300 (1 000)	300 (1 000)	300 (1 000)	460 (1 500)	490 (1 600)
B-747, complex site	490 (1 600)	550 (1 800)	580 (1 900)	640 (2 100)	700 (2 300)	730 (2 400)	760 (2 500)	820 (2 700)
B-727, complex site	300 (1 000)	300 (1 000)	300 (1 000)	460 (1 500)	550 (1 800)	460 (1 500)	490 (1 600)	550 (1 800)

Table G-12B. Typical azimuth sensitive area lengths (offset approach, see 4.3.7.1)

(distances are in metres (feet); values in both units have been rounded)

Azimuth to threshold distance	2.0° beamwidth					1.0° beamwidth		
	1 830 (6 000)	2 140 (7 000)	2 440 (8 000)	2 750 (9 000)	3 050 (10 000)	3 350 (11 000)	3 660 (12 000)	3 960 (13 000)
B-747, clean site	640 (2 100)	730 (2 400)	790 (2 600)	880 (2 900)	880 (2 900)	920 (3 000)	940 (3 100)	1 010 (3 300)
B-727, clean site	300 (1 000)	300 (1 000)	300 (1 000)	300 (1 000)	300 (1 000)	300 (1 000)	490 (1 600)	550 (1 800)
B-747, complex site	670 (2 200)	760 (2 500)	820 (2 700)	880 (2 900)	1 010 (3 300)	980 (3 200)	1 070 (3 500)	1 130 (3 700)
B-727, complex site	300 (1 000)	300 (1 000)	330 (1 100)	460 (1 500)	550 (1 800)	490 (1 600)	520 (1 700)	550 (1 800)

Table G-12C. Typical azimuth sensitive area lengths
(computed centre line approach, see 4.3.7.2, clean sites)
(distances are in metres (feet); values in both units have been rounded)

Azimuth to threshold distance	2.0° beamwidth					1.0° beamwidth		
	1 830 (6 000)	2 140 (7 000)	2 440 (8 000)	2 750 (9 000)	3 050 (10 000)	3 350 (11 000)	3 660 (12 000)	3 960 (13 000)
B-727, clean site								
Height: 300 (1 000)	300 (1 000)	300 (1 000)	300 (1 000)	300 (1 000)	300 (1 000)	300 (1 000)	300 (1 000)	300 (1 000)
75 (250)	300 (1 000)	300 (1 000)	300 (1 000)	300 (1 000)	300 (1 000)	300 (1 000)	490 (1 600)	550 (1 800)
60 (200)	300 (1 000)	300 (1 000)	300 (1 000)	460 (1 500)	490 (1 600)	610 (2 000)	610 (2 000)	670 (2 200)
45 (150)	300 (1 000)	300 (1 000)	490 (1 600)	550 (1 800)	610 (2 000)	670 (2 200)	760 (2 500)	820 (2 700)
30 (100)	300 (1 000)	520 (1 700)	610 (2 000)	700 (2 300)	820 (2 700)	920 (3 000)	980 (3 200)	1 100 (3 600)
15 (50)	610 (2 000)	730 (2 400)	880 (2 900)	1 010 (3 300)	1 070 (3 500)	1 100 (3 600)	1 040 (3 400)	1 190 (3 900)
B-747, clean site								
300 (1 000)	430 (1 400)	460 (1 500)	490 (1 600)	520 (1 700)	520 (1 700)	550 (1 800)	580 (1 900)	610 (2 000)
75 (250)	640 (2 100)	730 (2 400)	790 (2 600)	850 (2 800)	880 (2 900)	920 (3 000)	940 (3 100)	1 010 (3 300)
60 (200)	700 (2 300)	790 (2 600)	820 (2 700)	920 (3 000)	940 (3 100)	940 (3 100)	1 010 (3 300)	1 010 (3 300)
45 (150)	760 (2 500)	820 (2 700)	920 (3 000)	1 010 (3 300)	1 070 (3 500)	1 070 (3 500)	1 190 (3 900)	1 400 (4 600)
30 (100)	850 (2 800)	960 (3 100)	1 100 (3 600)	1 250 (4 100)	1 400 (4 600)	1 550 (5 100)	1 710 (5 600)	1 890 (6 200)
15 (50)	1 070 (3 500)	1 340 (4 400)	1 580 (5 200)	1 830 (6 000)	1 980 (6 500)	2 040 (6 700)	2 070 (6 800)	2 070 (6 800)

Table G-12D. Typical azimuth sensitive area lengths
(computed centre line approach, see 4.3.7.2, complex sites)
(distances are in metres (feet); values in both units have been rounded)

Azimuth to threshold distance	2.0° beamwidth					1.0° beamwidth		
	1 830 (6 000)	2 140 (7 000)	2 440 (8 000)	2 750 (9 000)	3 050 (10 000)	3 350 (11 000)	3 660 (12 000)	3 960 (13 000)
B-727, complex site								
Height: 300 (1 000)	300 (1 000)	300 (1 000)	300 (1 000)	300 (1 000)	300 (1 000)	300 (1 000)	300 (1 000)	300 (1 000)
300 (1 000)	300 (1 000)	300 (1 000)	330 (1 100)	460 (1 500)	550 (1 800)	490 (1 600)	520 (1 700)	550 (1 800)
300 (1 000)	300 (1 000)	330 (1 100)	330 (1 100)	490 (1 600)	550 (1 800)	580 (1 900)	610 (2 000)	730 (2 400)
330 (1 100)	330 (1 100)	330 (1 100)	490 (1 600)	550 (1 800)	670 (2 200)	700 (2 300)	790 (2 600)	880 (2 900)
330 (1 100)	330 (1 100)	550 (1 800)	640 (2 100)	730 (2 400)	1 010 (3 300)	940 (3 100)	1 040 (3 400)	1 160 (3 800)
640 (2 100)	640 (2 100)	790 (2 600)	940 (3 100)	1 070 (3 500)	1 250 (4 100)	1 250 (4 100)	1 280 (4 200)	1 430 (4 700)
B-747, clean site								
300 (1 000)	430 (1 400)	460 (1 500)	490 (1 600)	520 (1 700)	670 (2 200)	550 (1 800)	580 (1 900)	610 (2 000)
75 (250)	670 (2 200)	760 (2 500)	820 (2 700)	880 (2 900)	1 010 (3 300)	980 (3 200)	1 070 (3 500)	1 130 (3 700)
60 (200)	730 (2 400)	820 (2 700)	920 (3 000)	1 010 (3 300)	1 130 (3 700)	1 040 (3 400)	1 070 (3 500)	1 220 (4 000)
45 (150)	820 (2 700)	880 (2 900)	980 (3 200)	1 100 (3 600)	1 220 (4 000)	1 100 (3 600)	1 190 (3 900)	1 430 (4 700)
30 (100)	920 (3 000)	1 010 (3 300)	1 130 (3 700)	1 280 (4 200)	1 430 (4 700)	1 580 (5 200)	1 770 (5 800)	1 950 (6 400)
15 (50)	1 100 (3 600)	1 370 (4 500)	1 620 (5 300)	1 830 (6 000)	2 130 (7 000)	2 230 (7 300)	2 350 (7 700)	2 380 (7 800)

Table G-12E. Typical azimuth sensitive area semi-width to protect roll-out guidance (see 4.3.7)
(distances are in metres (feet))

	2.0°beamwidth					1.0°beamwidth		
Azimuth to threshold distance	1 830 (6 000)	2 140 (7 000)	2 440 (8 000)	2 750 (9 000)	3 050 (10 000)	3 350 (11 000)	3 660 (12 000)	3 960 (13 000)
Clean/complex site	38 (123)	48 (157)	59 (193)	70 (230)	83 (271)	54 (177)	62 (202)	69 (227)

Table G-13. Minimum height surface angle and related protected coverage volume lengths for MLS/RNAV approach procedures

Protected coverage volume length L[m(ft)] PCH = 2.0 m	Minimum height surface angle (degrees), θ	
	B-727	B-747
300 (1 000)	1.81	3.49
450 (1 500)	1.23	2.36
600 (2 000)	0.95	1.79
750 (2 500)	0.77	1.44
900 (3 000)	N/A	1.21

The following equation can be used to determine the minimum height surface angle (Θ) in respect to an azimuth antenna phase centre for arbitrary protected coverage volume length "L".

$$\theta = \tan^{-1}\left[\frac{\mathrm{TFH} + \frac{\sqrt{\lambda(\mathrm{L})}}{4} - \mathrm{PCH}}{\mathrm{L}}\right]$$

where:

TFH = tail fin height;
PCH = phase centre height of MLS antenna;
λ = MLS wave length.

Note.— TFH equals 10.4 m for B-727 and 19.3 m for B-747, and λ is 0.06 m. PCH and L must be in metres if TFH and λ are in metres.

Table G-14. Interrelationship of ground equipment monitor and control action

Subsystem failure	Resultant action						
	Approach azimuth	Approach elevation	Back azimuth	Basic data radiated into approach azimuth coverage	Basic data radiated into back azimuth coverage	Auxiliary data	DME/N or DME/P
Approach azimuth	*	*		+		+	
Approach elevation		*					
Back azimuth			*		+		
Basic data radiated into approach azimuth coverage	*	*		*		+	
Basic data radiated into back azimuth coverage			*		*		
Auxiliary data	+	+		+		*	
DME/N or DME/P							*

* Indicates radiation should cease.
\+ Indicates radiation may continue when operationally required.

Table G-15. Continuity of service and integrity objectives for MLS basic and MLS/RNAV operations

Level	Azimuth or elevation			DME/P (Note 6)		
	Integrity in any one landing	Continuity of service	MTBO (hours)	Integrity in any one landing (Note 4)	Continuity of service	MTBO (hours)
1	Not demonstrated, but designed to meet the Level 2 requirements (Note 3)					
2	$1 - 1 \times 10^{-7}$	$1 - 4 \times 10^{-6}$ (15 s)	1 000	$1 - 1 \times 10^{-7}$	$1 - 4 \times 10^{-6}$ (15 s)	1 000
3	$1 - 0.5 \times 10^{-9}$	$1 - 2 \times 10^{-6}$ (15 s)	2 000	$1 - 1 \times 10^{-7}$	$1 - 4 \times 10^{-6}$ (15 s)	1 000
4 (Note 5)	$1 - 0.5 \times 10^{-9}$	$1 - 2 \times 10^{-6}$ (30 s Az) (15 s El) (Note 6)	4 000 Az 2 000 El (Note 6)	$1 - 1 \times 10^{-7}$	$1 - 4 \times 10^{-6}$ (15 s)	1 000

Notes.—

1. Data word continuity of service and integrity are included in the specified values of the angle function for each level of service.
2. Back azimuth is not required for basic operations.
3. It is intended that all equipments meet at least Level 2 requirements.
4. If DME/N is used with MLS the figures may be reduced to $1 - 1 \times 10^{-5}$.
5. The Level 4 exposure times are based on experience with ILS and are consistent with existing operational capabilities. As experience is gained with MLS, and enhanced operational capabilities are proposed, it may be necessary to adjust these values.
6. MLS/RNAV procedures may require the Level 3 and 4 integrity, continuity of service and MTBO objectives of the elevation, DME/P and, if used, back azimuth to be equivalent to the approach azimuth equipment.

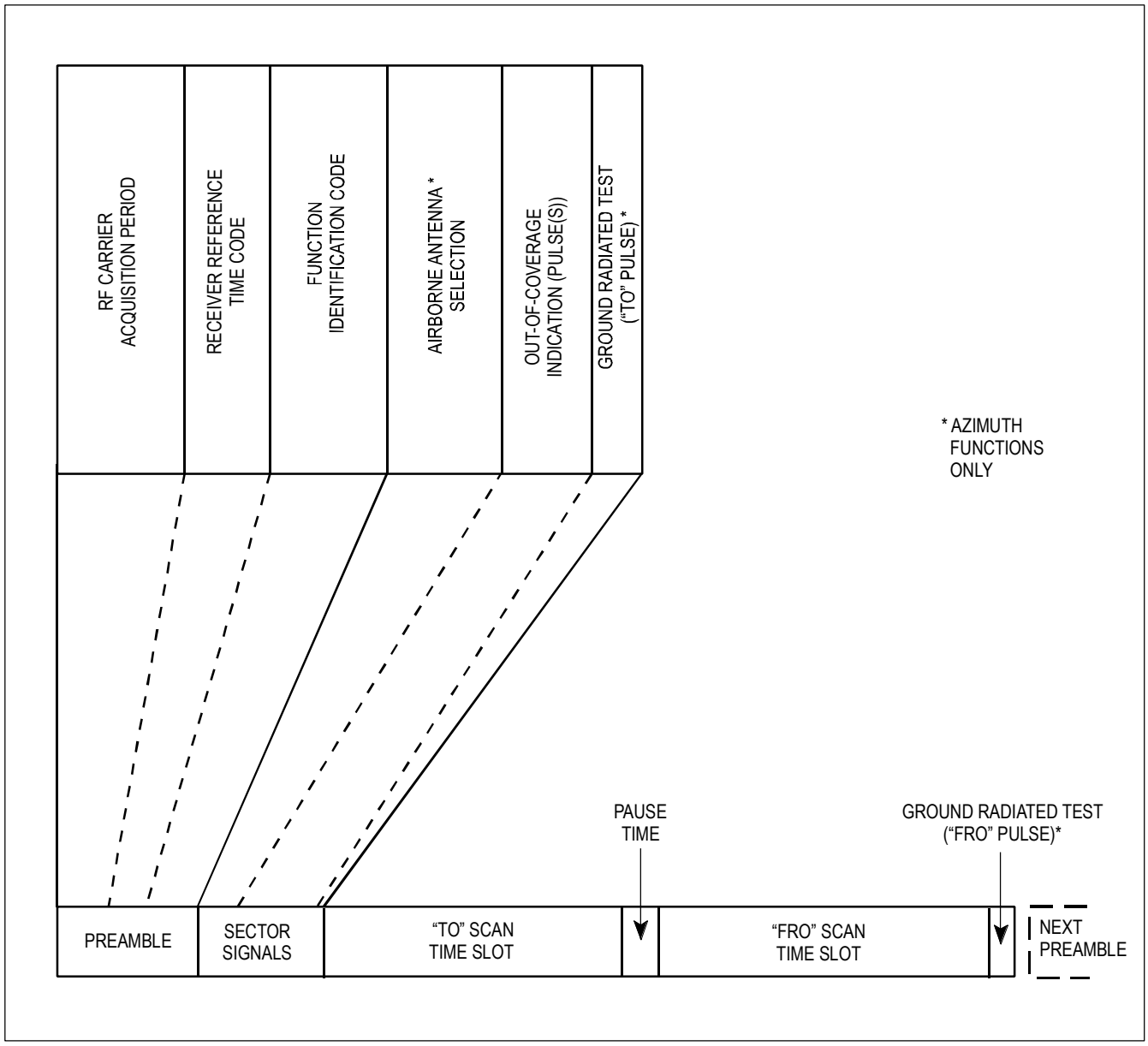

Figure G-1. Angle function organization

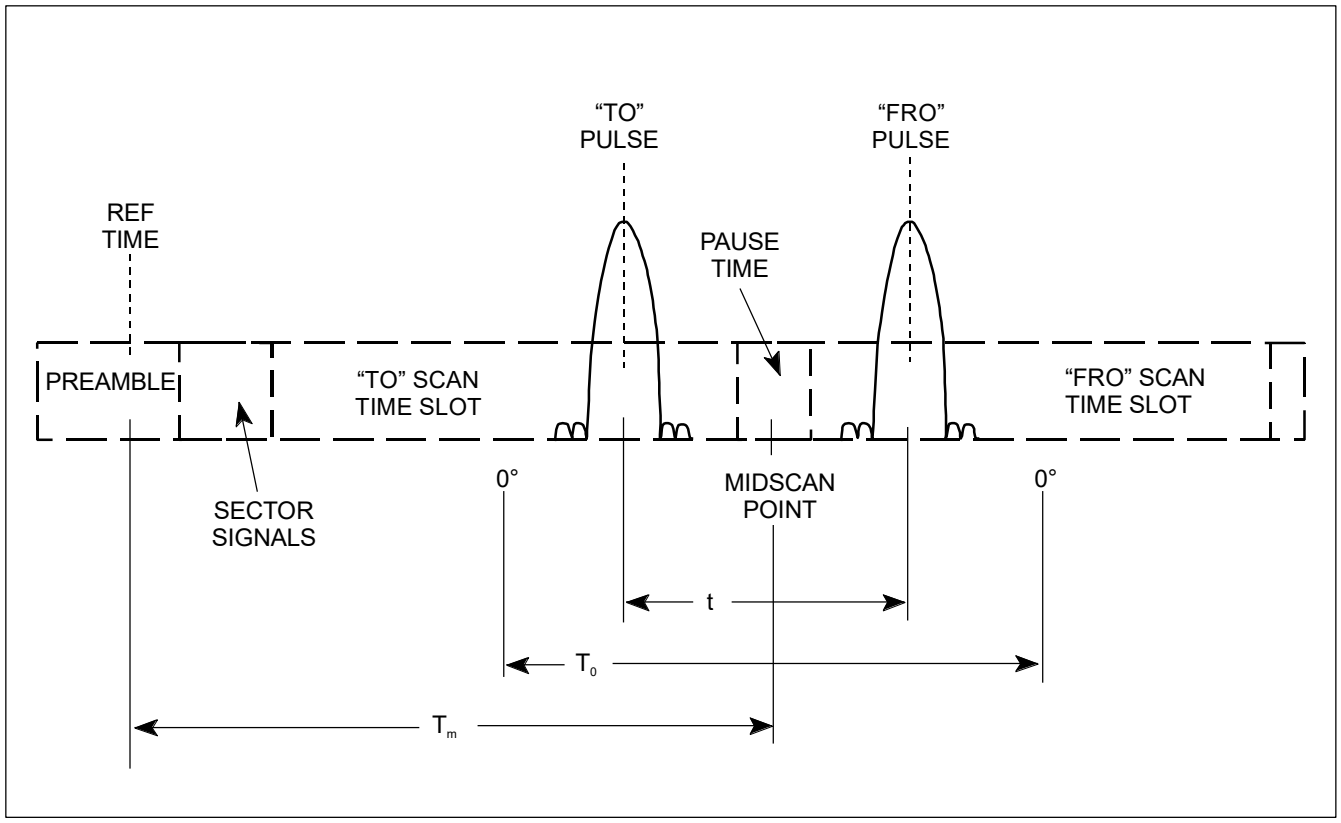

Figure G-2. Angle scan timing parameters

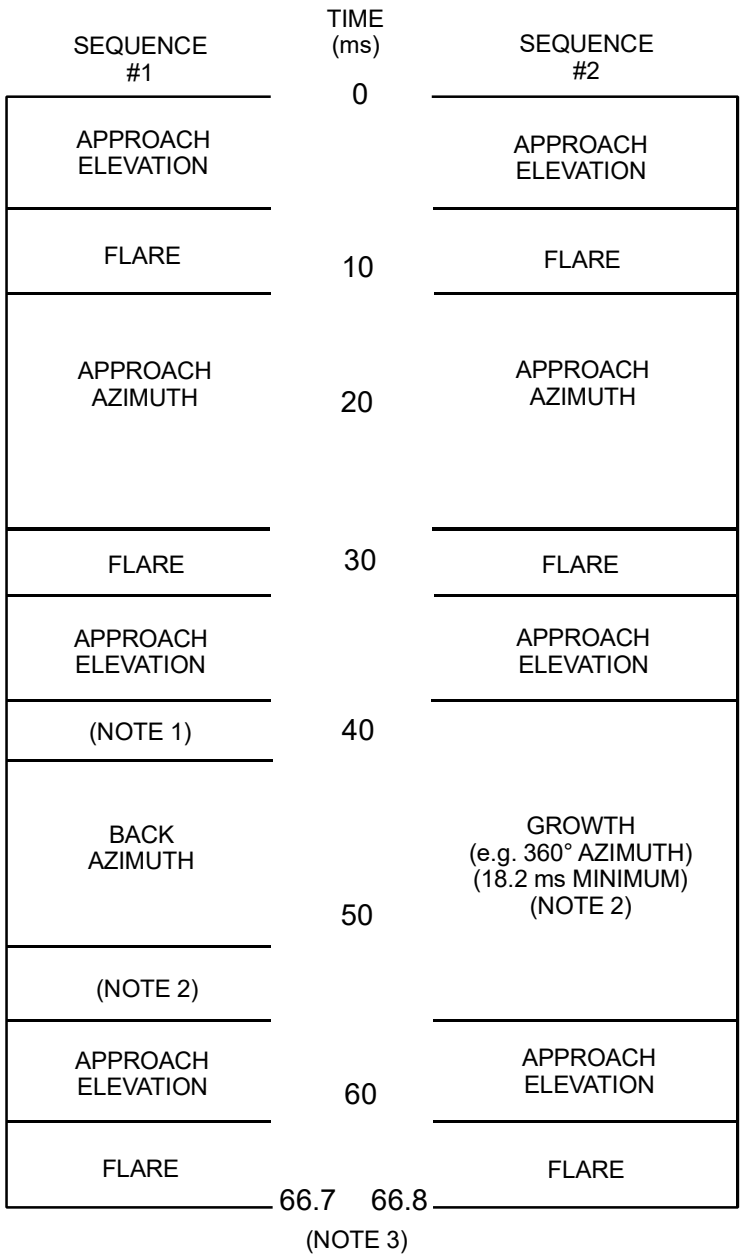

Notes:

1. When back azimuth is provided, basic data word 2 must be transmitted only in this position.
2. Data words may be transmitted in any open time periods.
3. The total time duration of sequence #1 plus sequence #2 must not exceed 134 ms.

Figure G-3A. Transmission sequence pair which provides for all MLS angle guidance functions

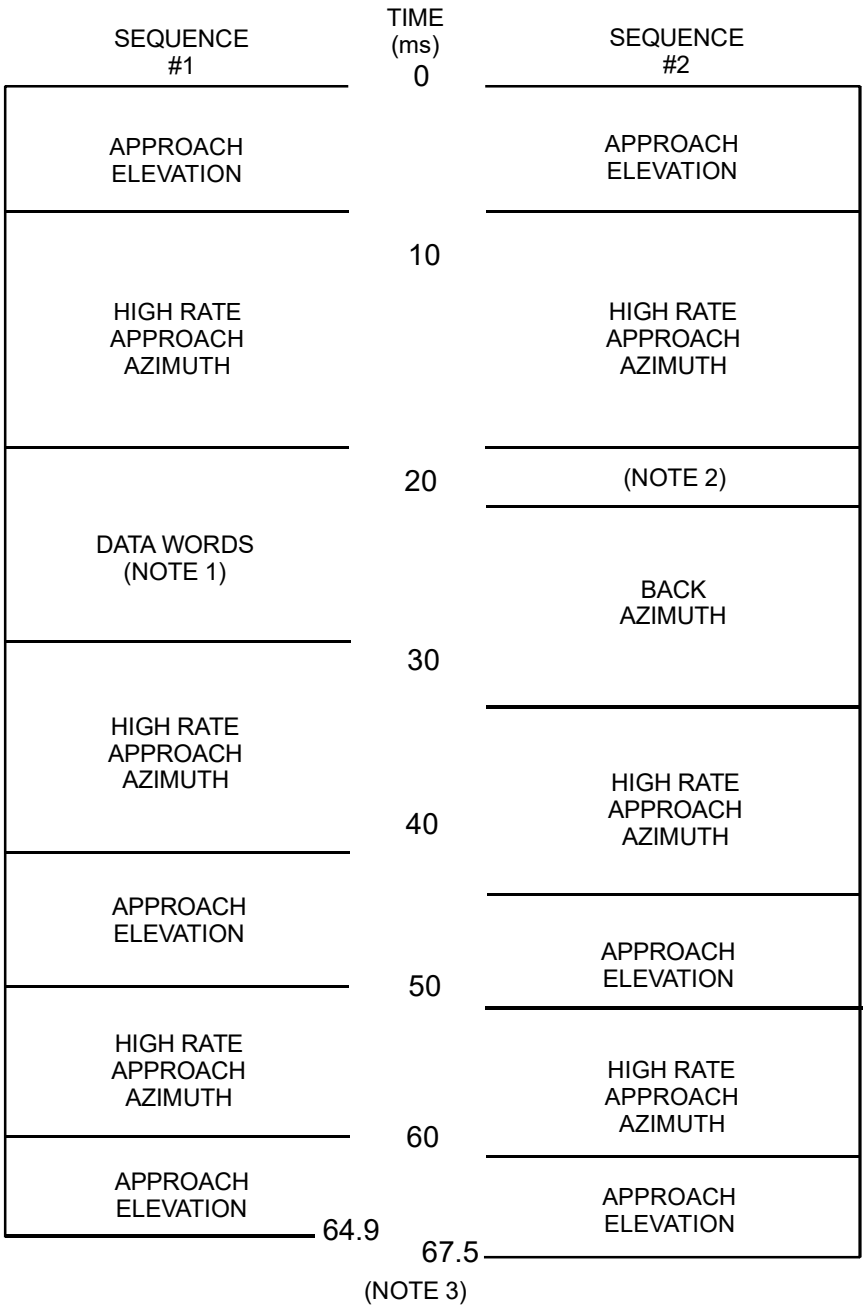

Notes:

1. Data words may be transmitted in any open time periods.
2. When back azimuth is provided, basic data word 2 must be transmitted only in this position.
3. The total time duration of sequence #1 plus sequence #2 must not exceed 134 ms.

Figure G-3B. Transmission sequence pair which provides for the MLS high rate approach azimuth angle guidance function

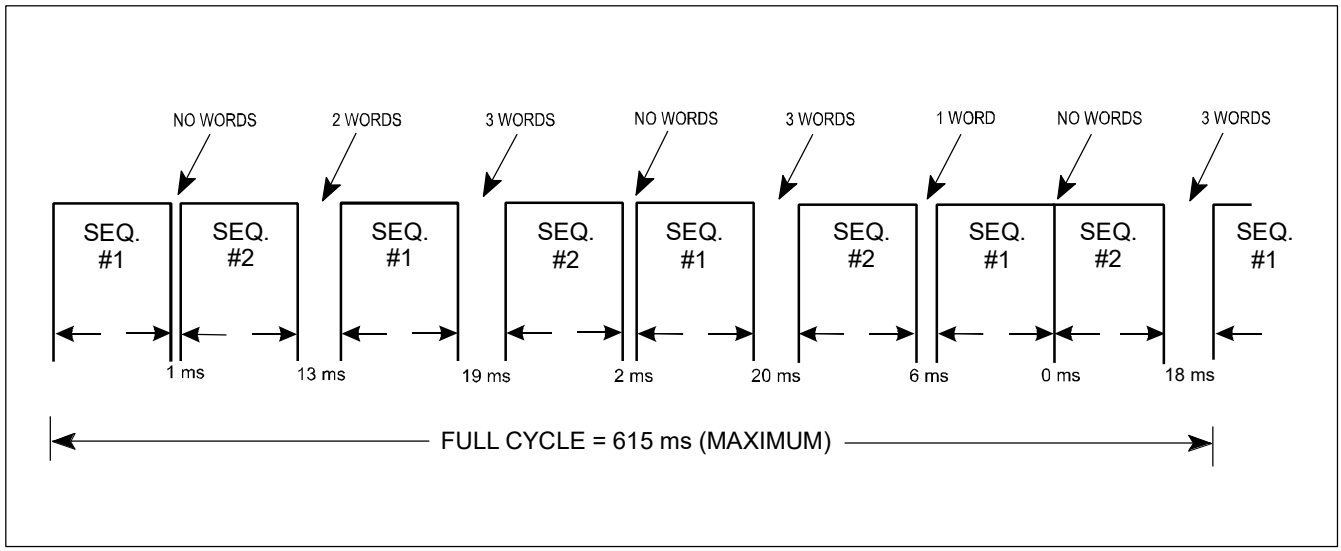

Figure G-3C. Complete multiplex transmission cycle showing open time periods available for data words

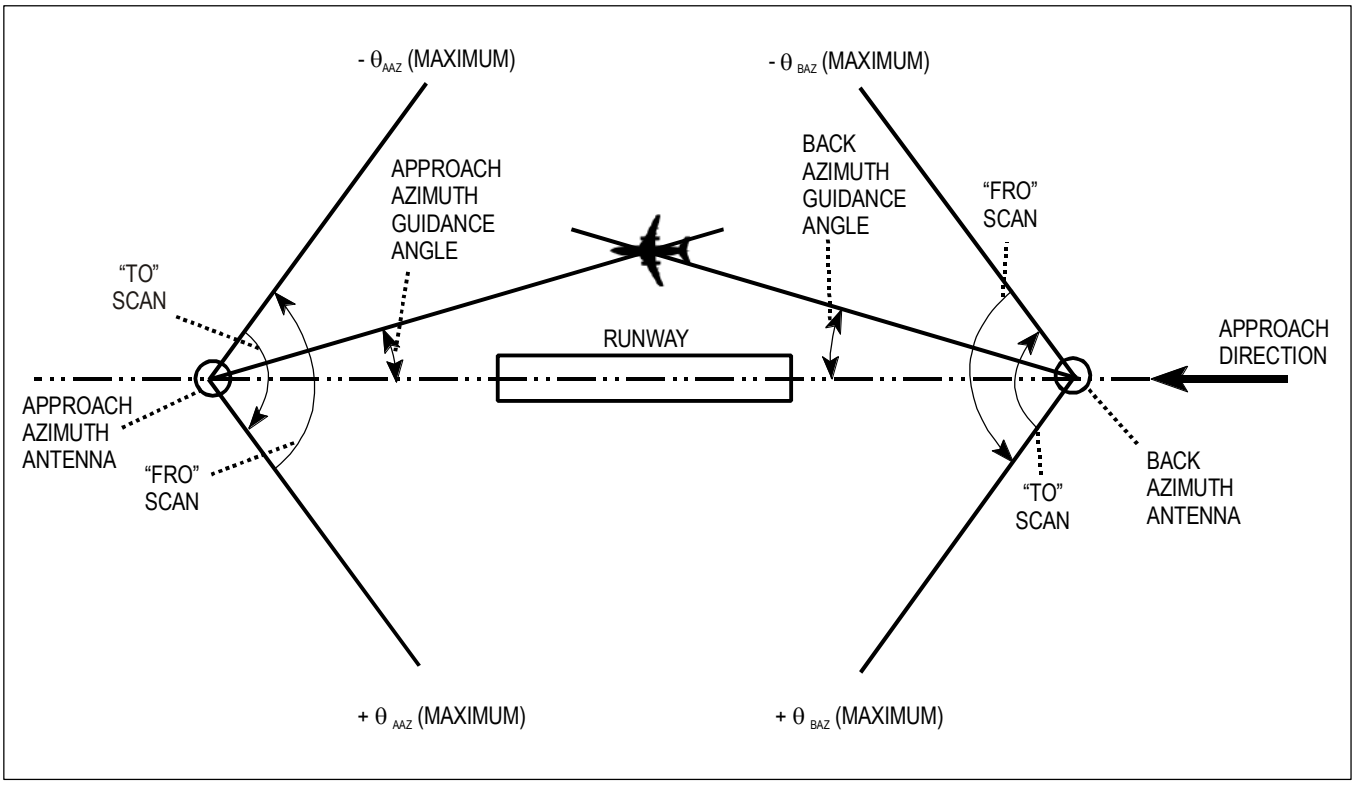

Figure G-4. Scanning conventions for azimuth guidance functions

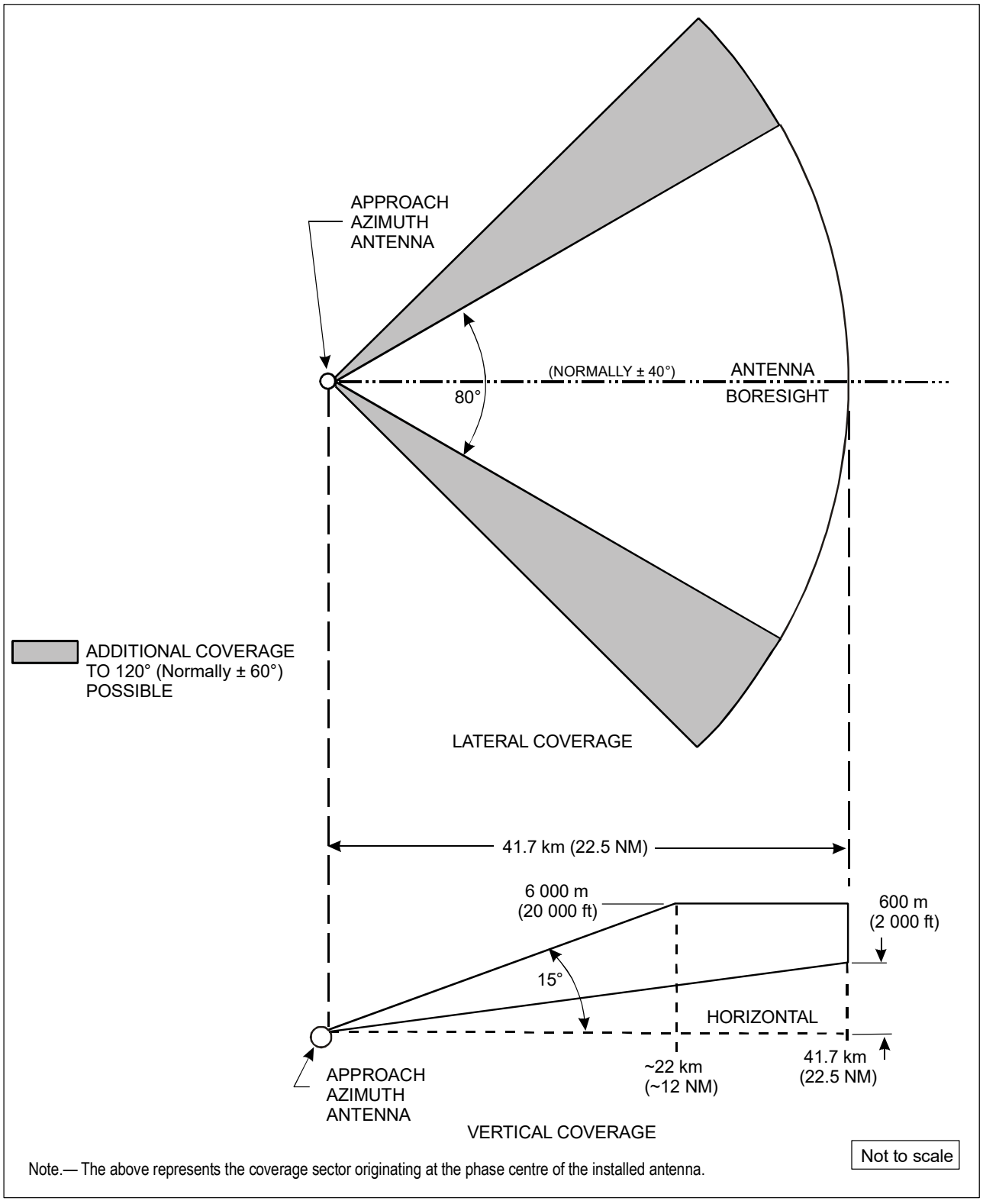

Figure G-5A. Approach azimuth region coverage

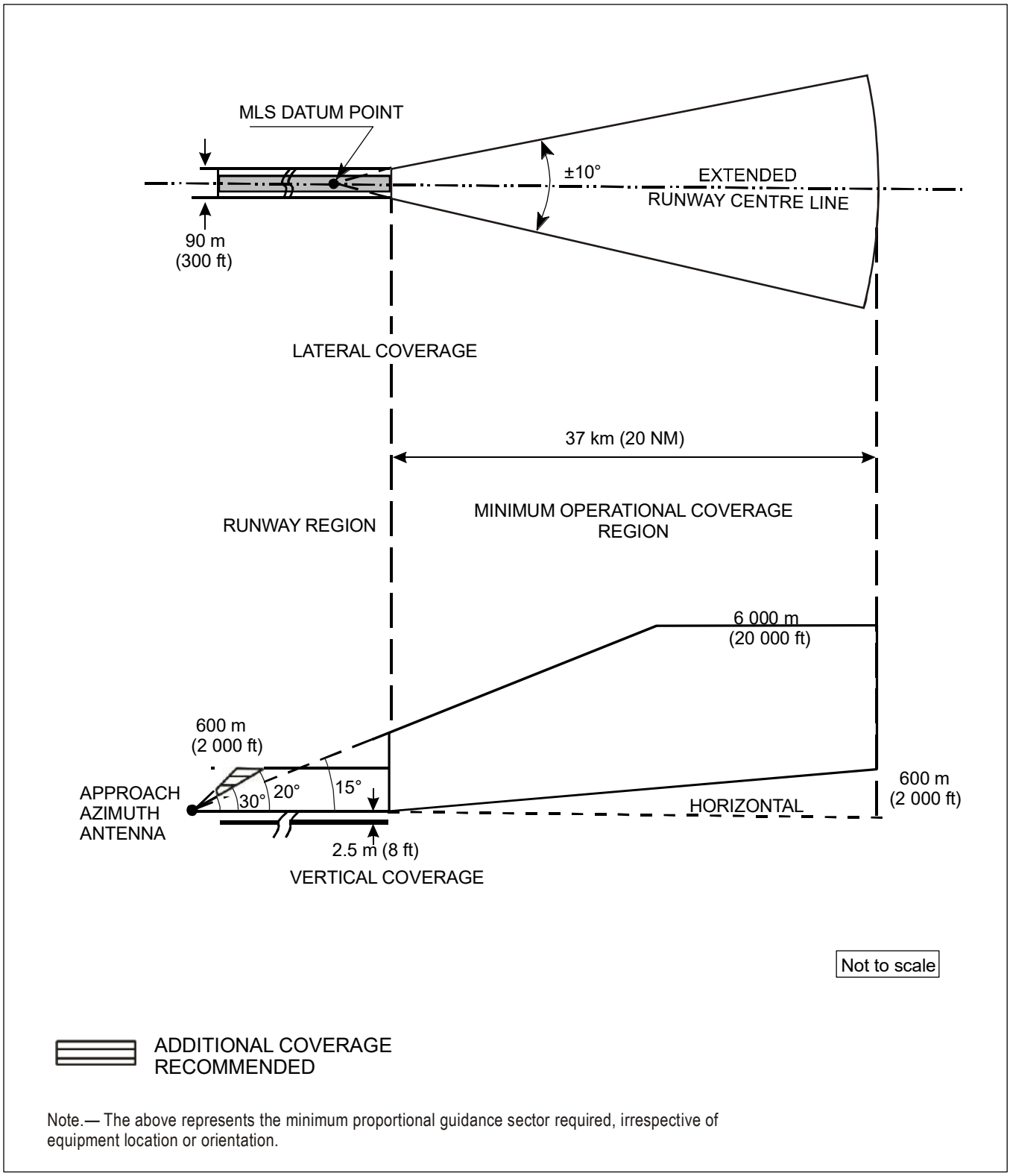

Note.— The above represents the minimum proportional guidance sector required, irrespective of equipment location or orientation.

Figure G-5B. Azimuth runway region coverage and minimum operational coverage region

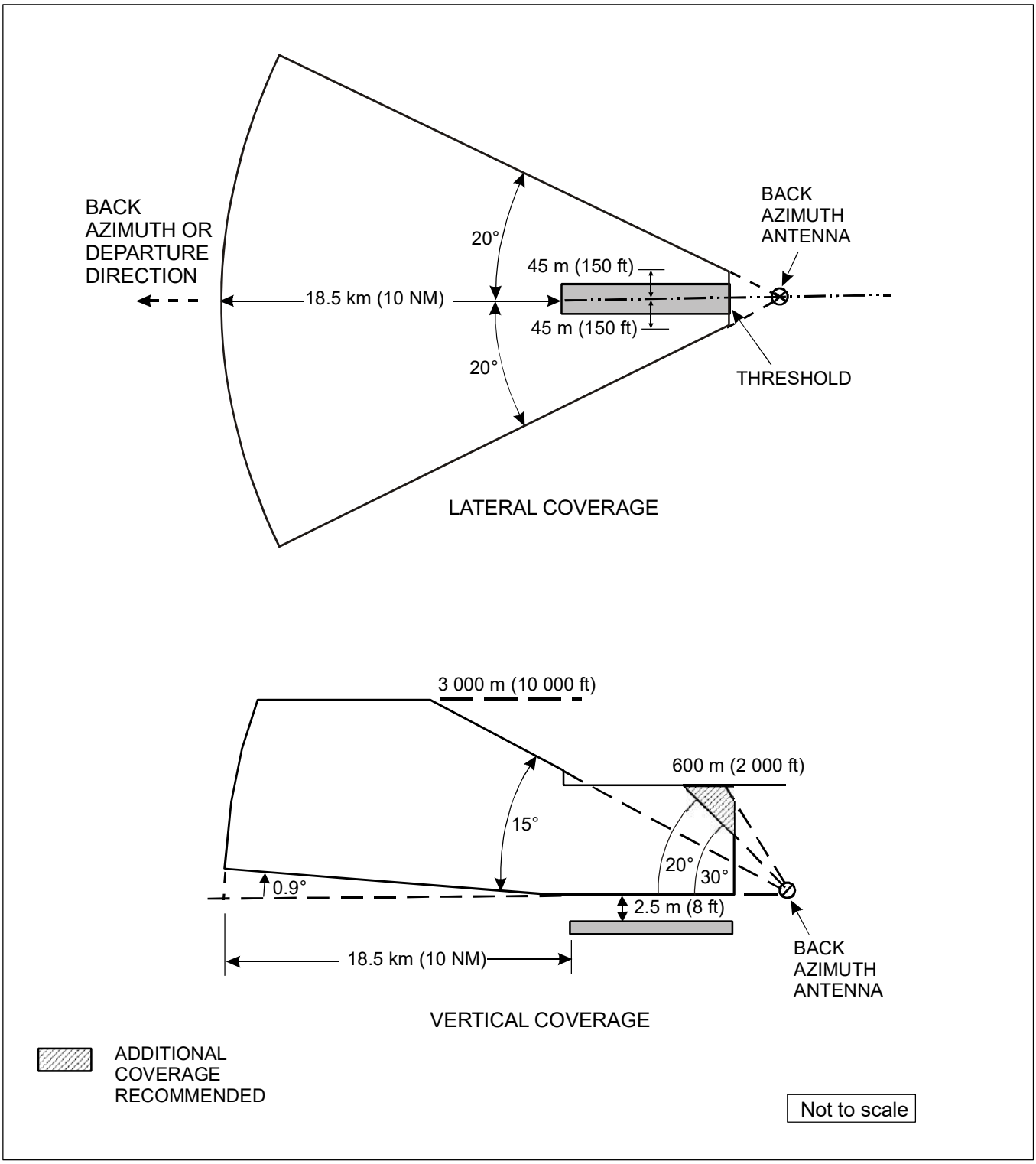

Figure G-6. Back azimuth region coverage

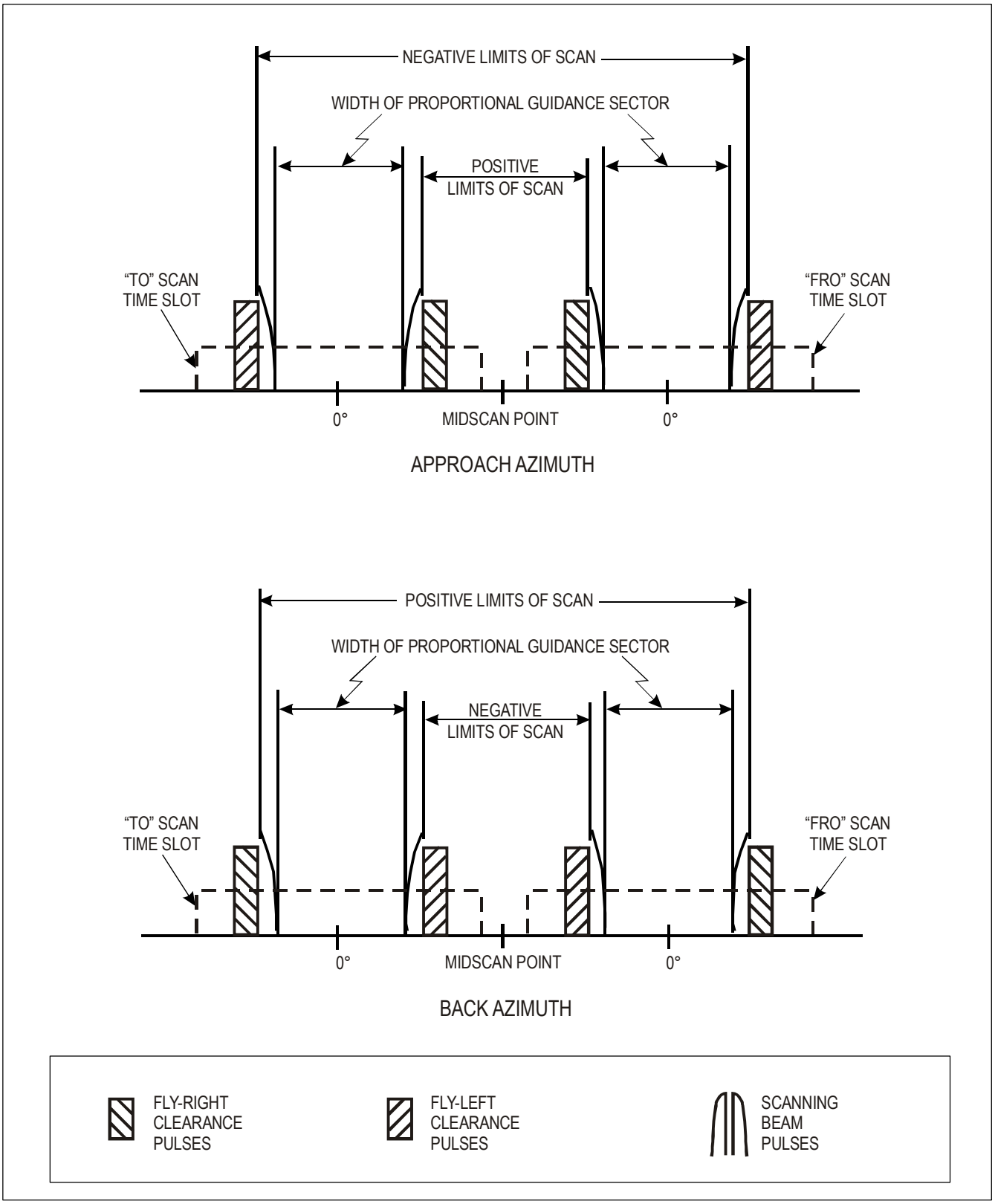

Figure G-7. Clearance pulse conventions for azimuth functions

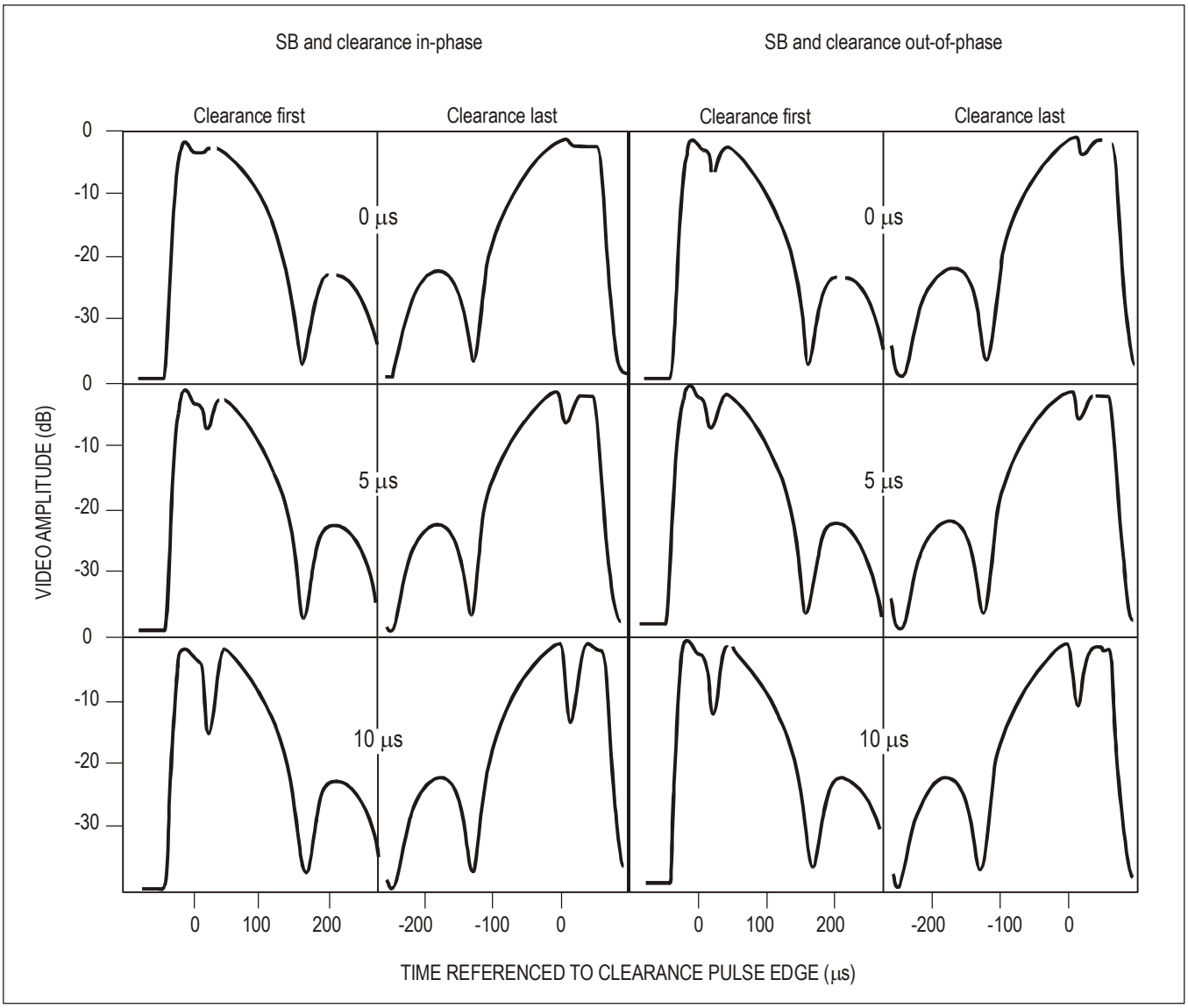

Figure G-8. Examples of received video waveforms in SB/clearance transition region for switching times of 0, 5 and 10 microseconds

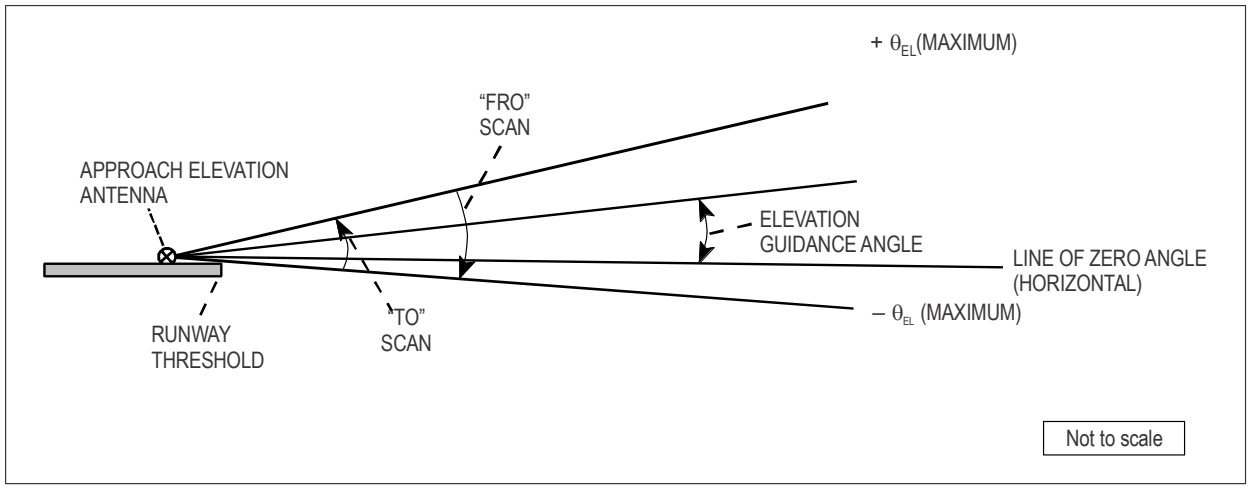

Figure G-9. Scanning conventions for approach elevation function

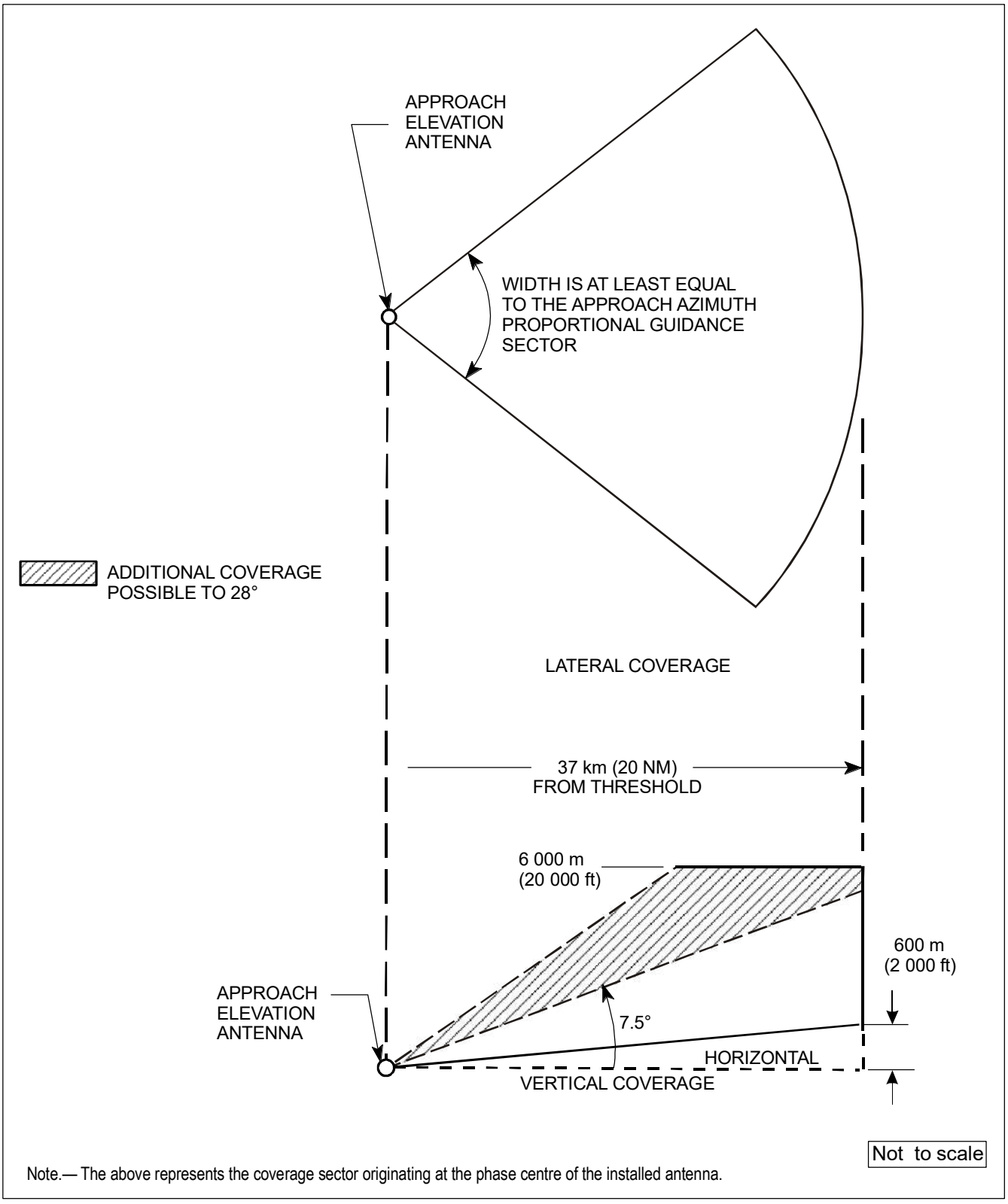

Figure G-10A. Elevation approach region coverage

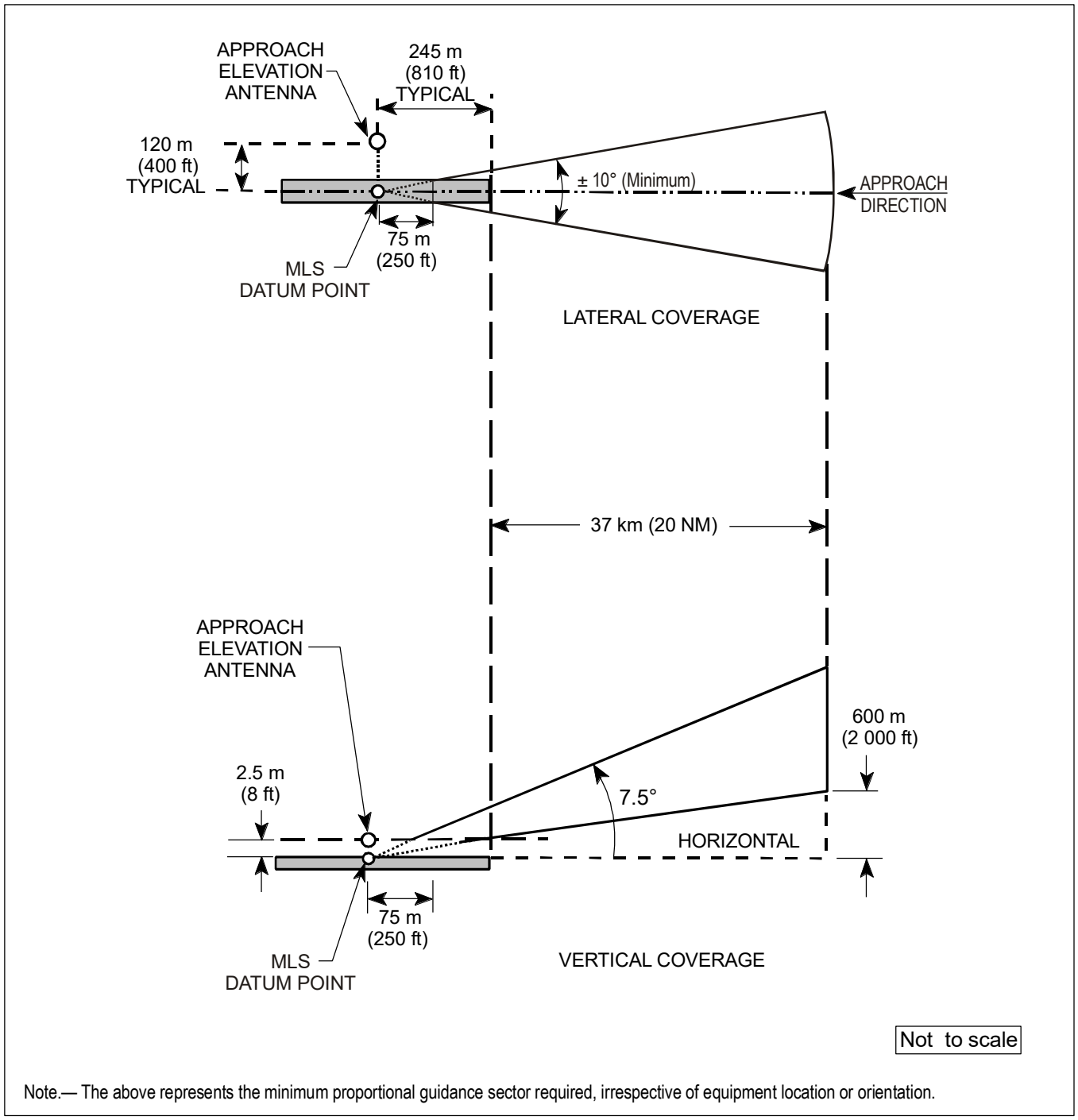

Note.— The above represents the minimum proportional guidance sector required, irrespective of equipment location or orientation.

Figure G-10B. Elevation minimum operational coverage

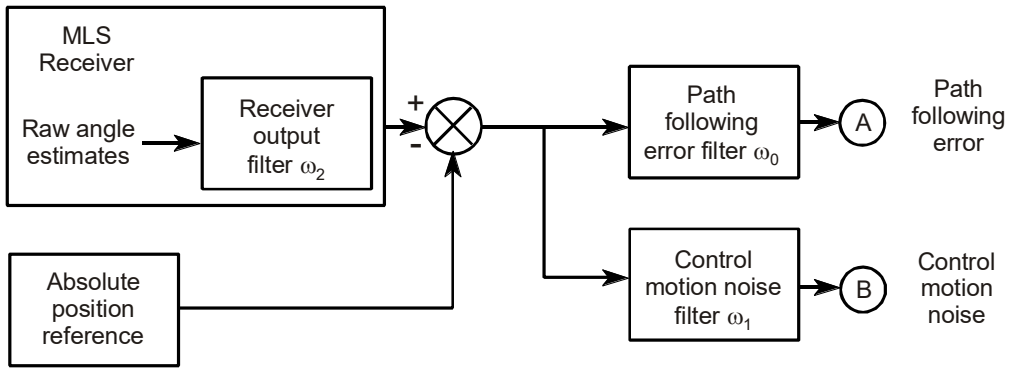

Guidance function	Corner frequencies (Radians/sec)		
	ω_0	ω_1	ω_2
Approach azimuth	0.5	0.3	10
Approach elevation	1.5	0.5	10
DME//P	1.5	0.5	10

Receiver output filter $\dfrac{\omega_2}{S + \omega_2}$

Path following filter $\dfrac{\omega_n^2}{S^2 + 2\zeta\omega_n S + \omega_n^2}$ $\zeta = 1$, $\omega_0 = 0.64\ \omega_n$

Control motion noise filter $\dfrac{S}{S + \omega_1}$ $S = j\omega$

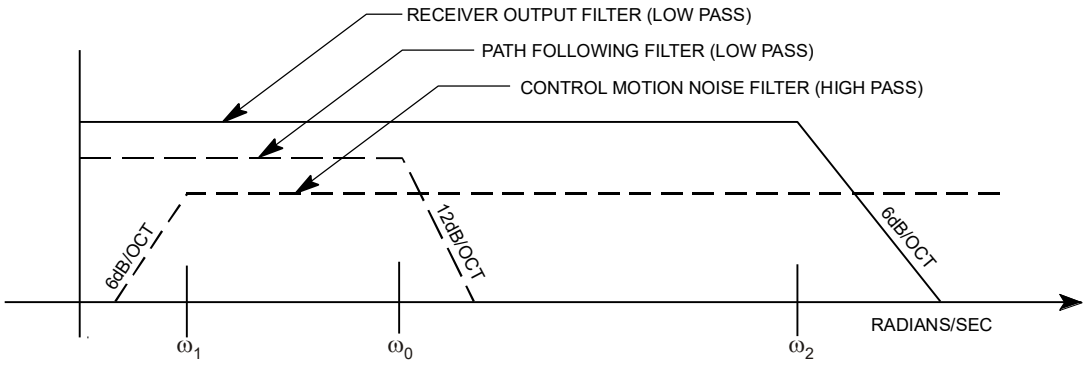

Figure G-11. Filter configurations and corner frequencies

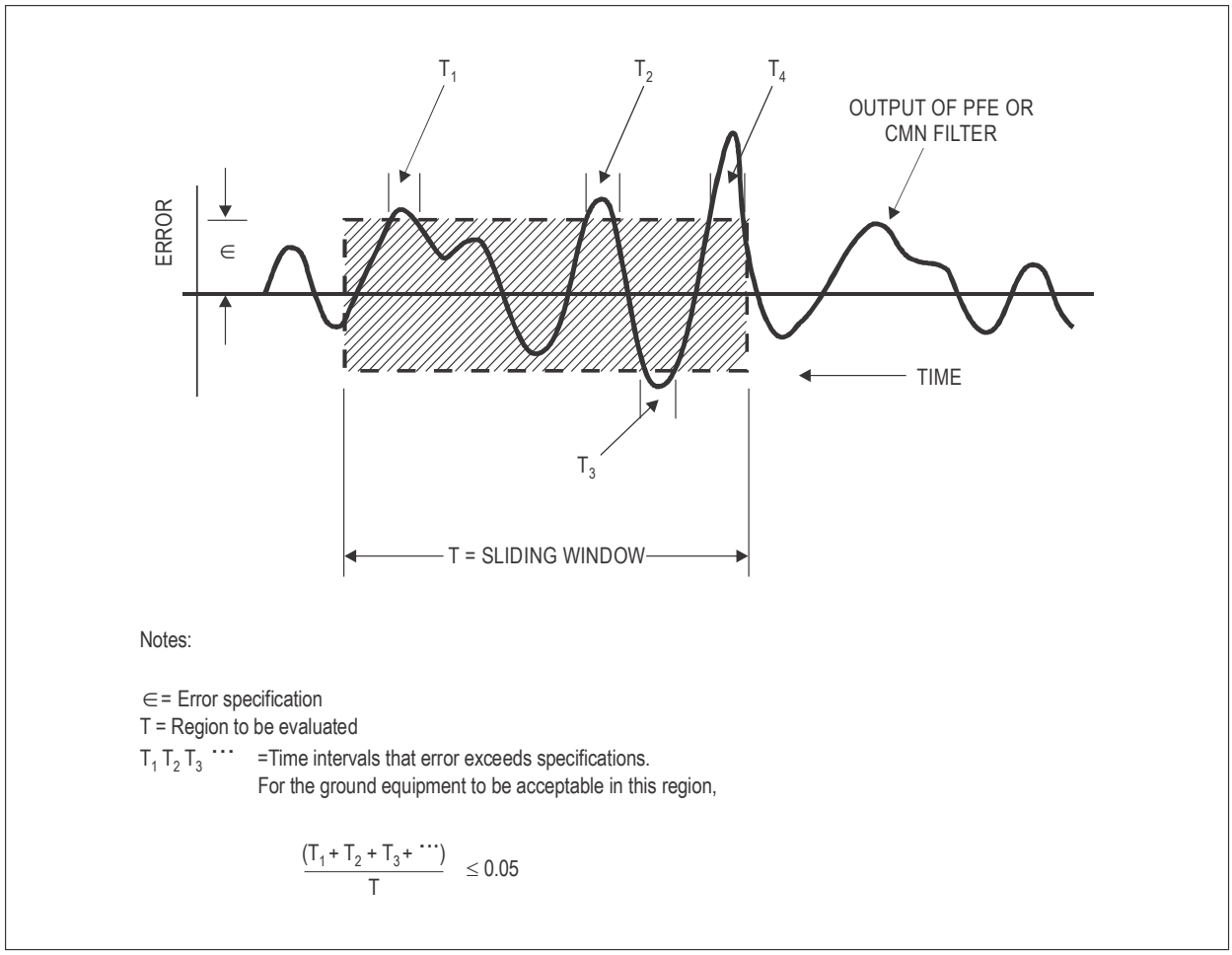

Notes:

∈ = Error specification

T = Region to be evaluated

$T_1\ T_2\ T_3\ \cdots$ =Time intervals that error exceeds specifications.
For the ground equipment to be acceptable in this region,

$$\frac{(T_1 + T_2 + T_3 + \cdots)}{T} \leq 0.05$$

Figure G-12. MLS measurement methodology

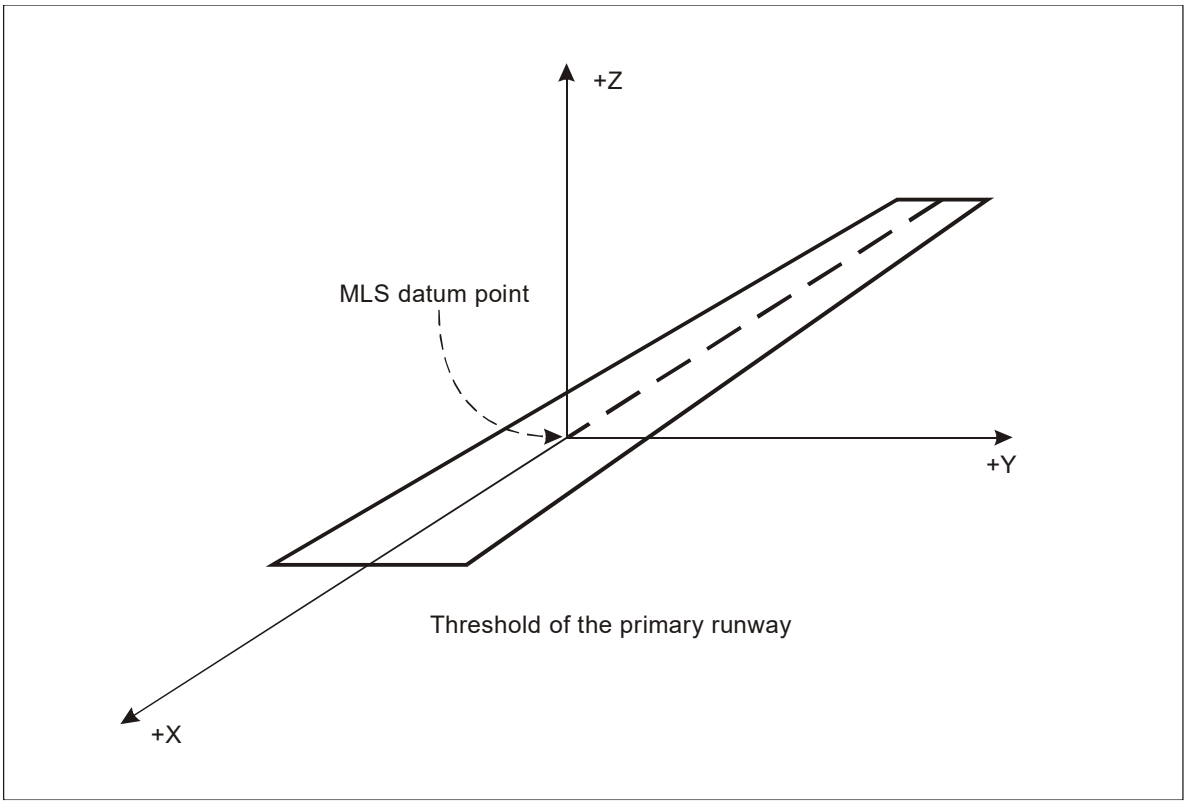

Figure G-13. MLS/RNAV way-point coordinate system

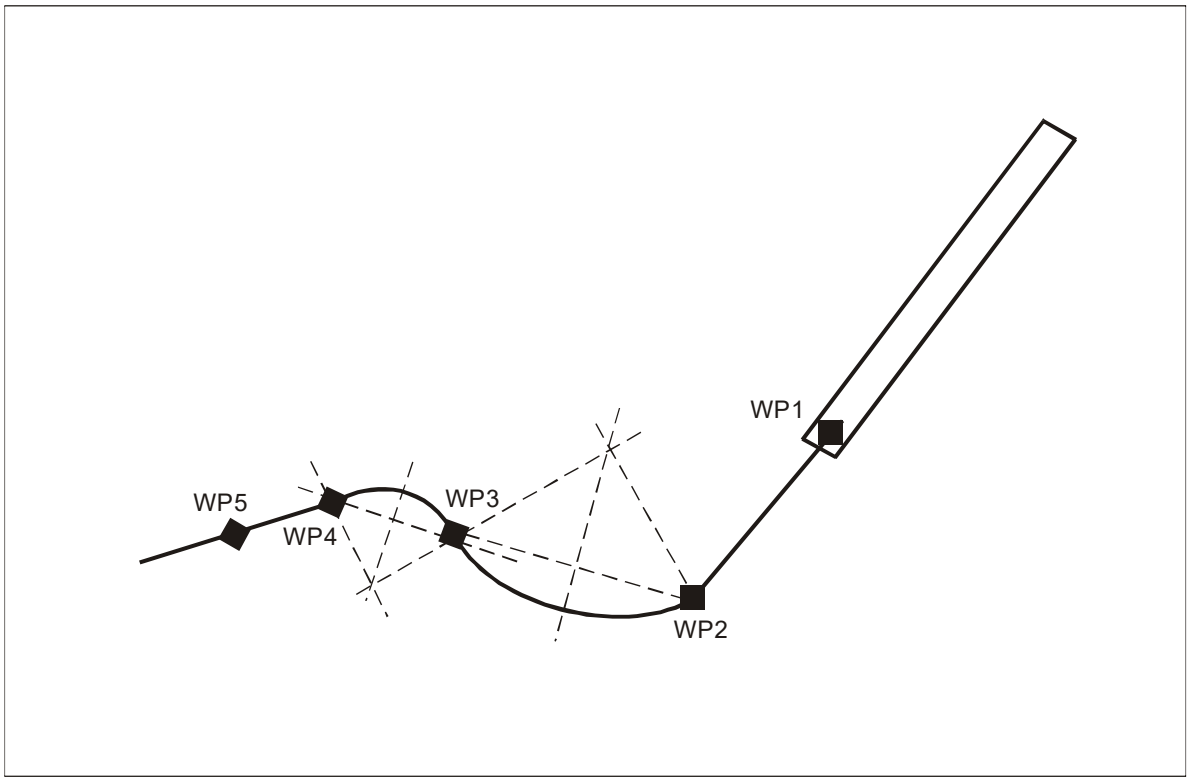

Figure G-14. Definition of curved segments

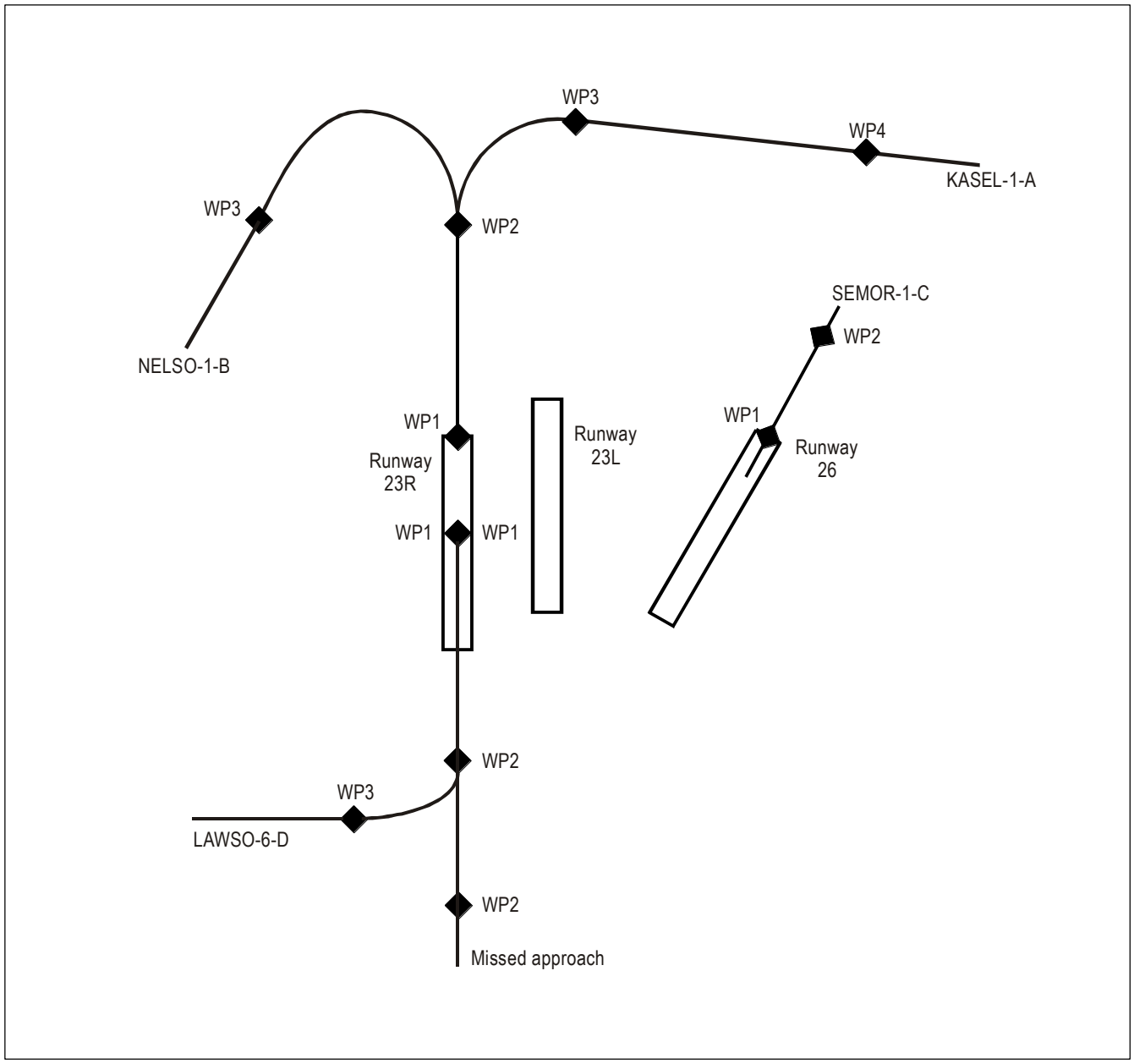

Figure G-15. Diagram of sample MLS/RNAV procedures

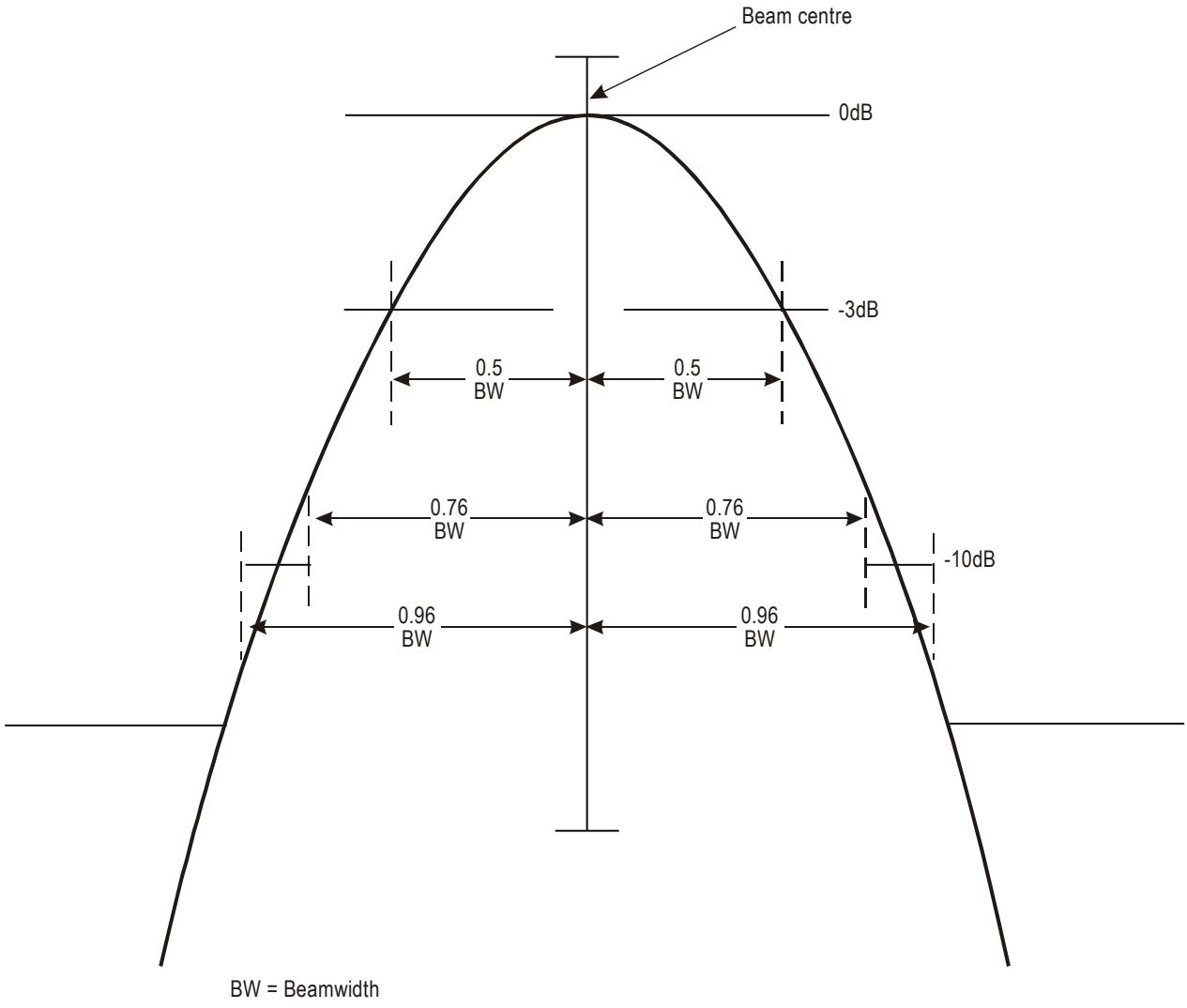

Note.— The beam envelope is smoothed by a 26 kHz video filter before measurement.

Figure G-16. Far field dynamic signal-in-space

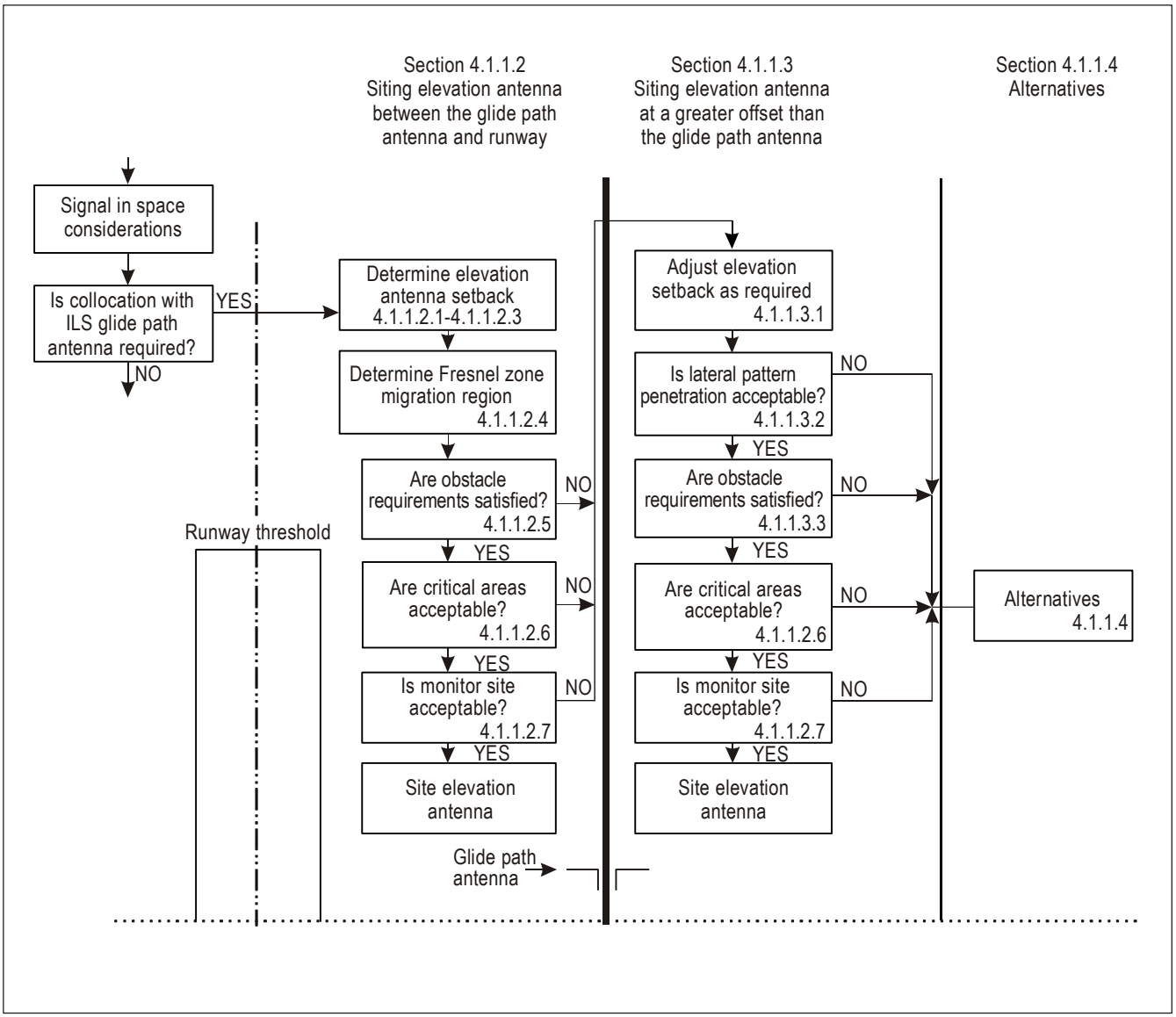

Figure G-17. Elevation/glide path logic flow diagram

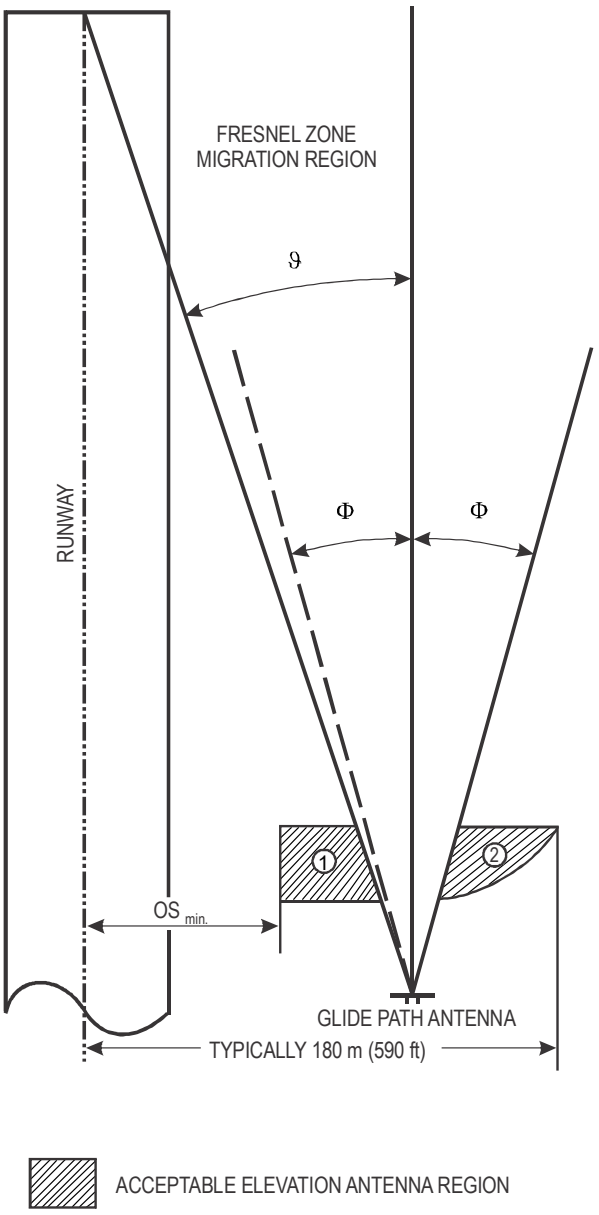

Note.— If | ϑ | < | Φ | lateral pattern penetration factor will prevail over Fresnel zone factor in region 1.

Figure G-18. Elevation antenna regions for collocation with ILS (3° minimum glide path)

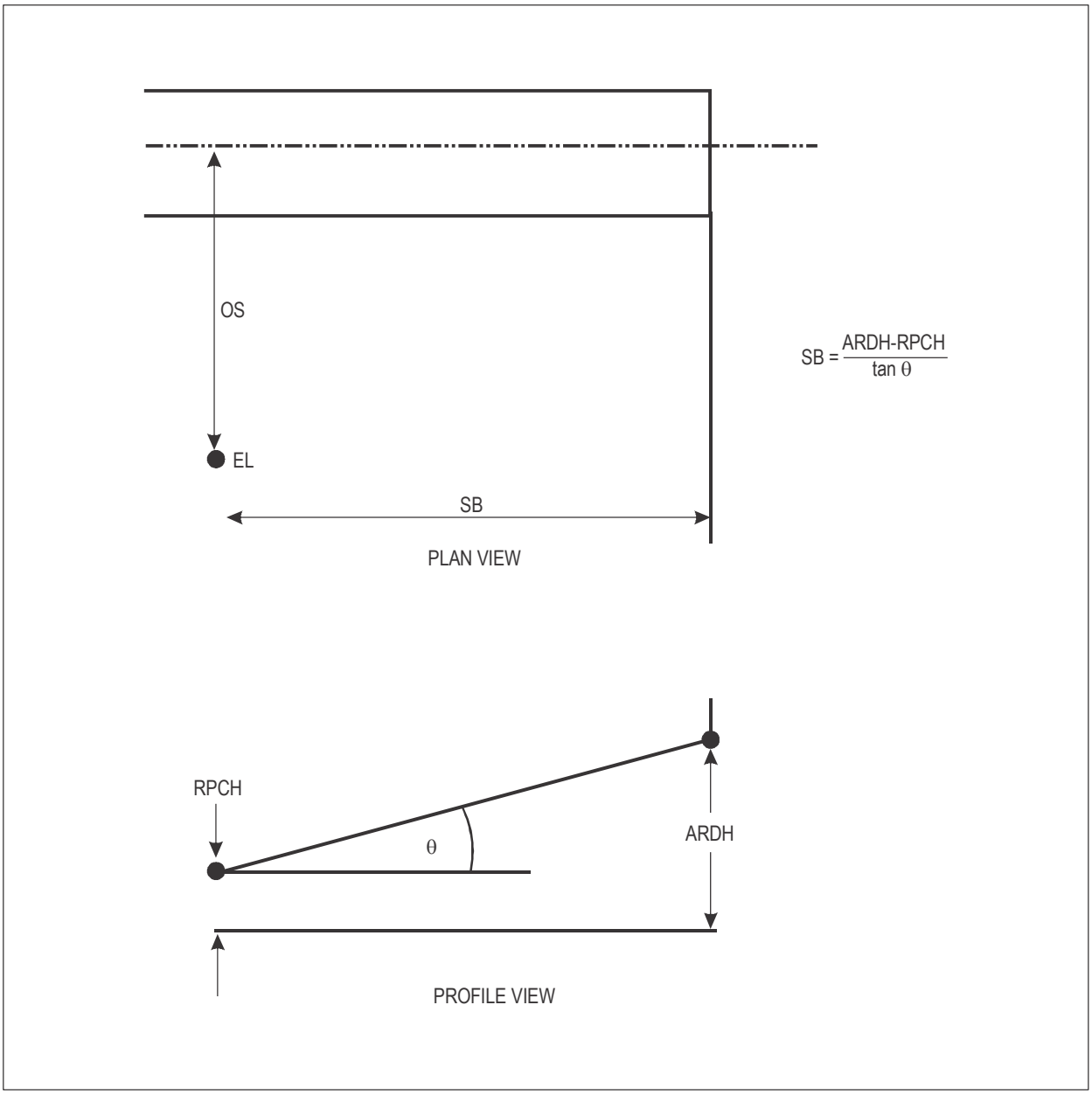

Figure G-19. Elevation siting parameters

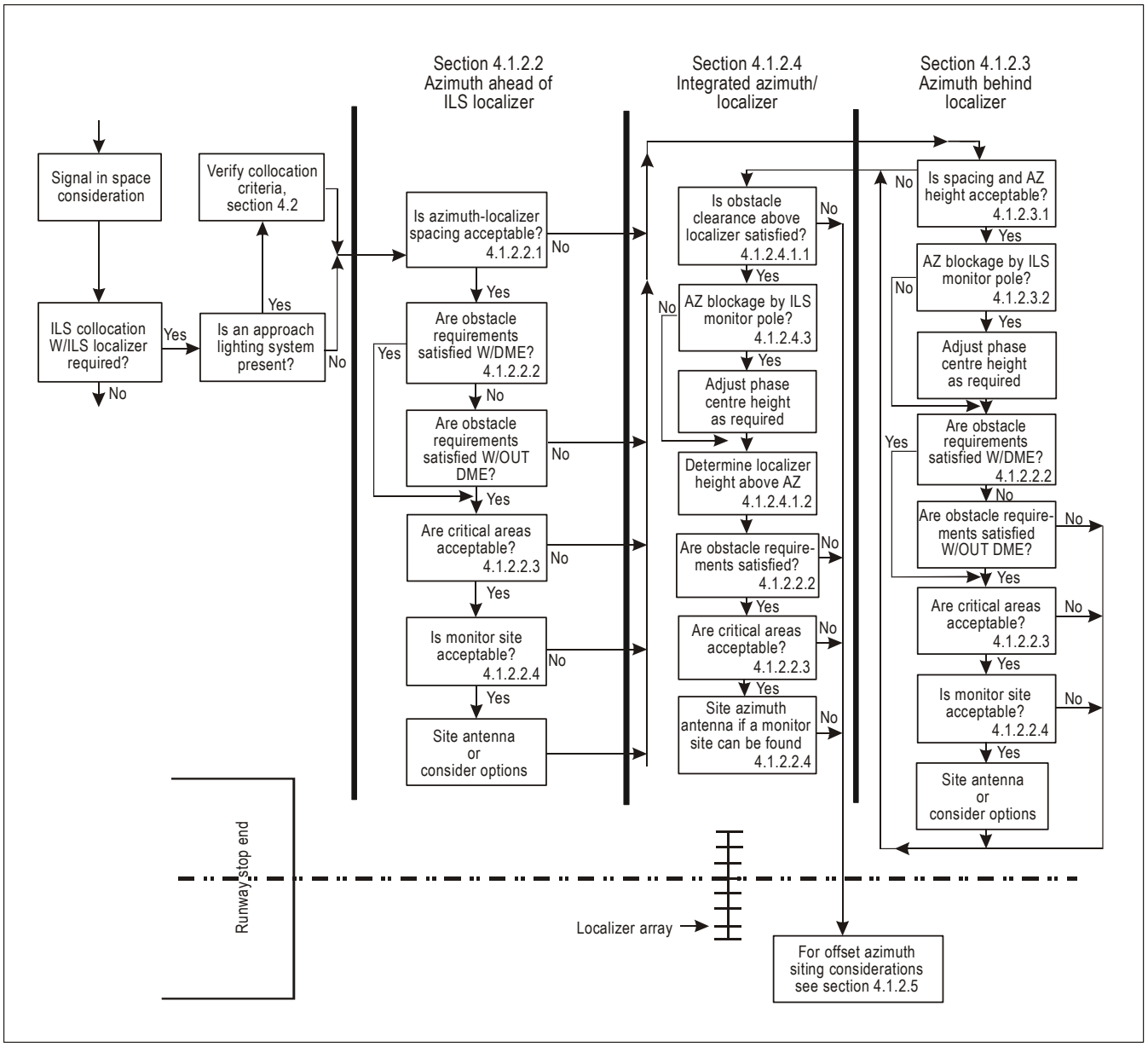

Figure G-20. Azimuth/localizer logic flow diagram

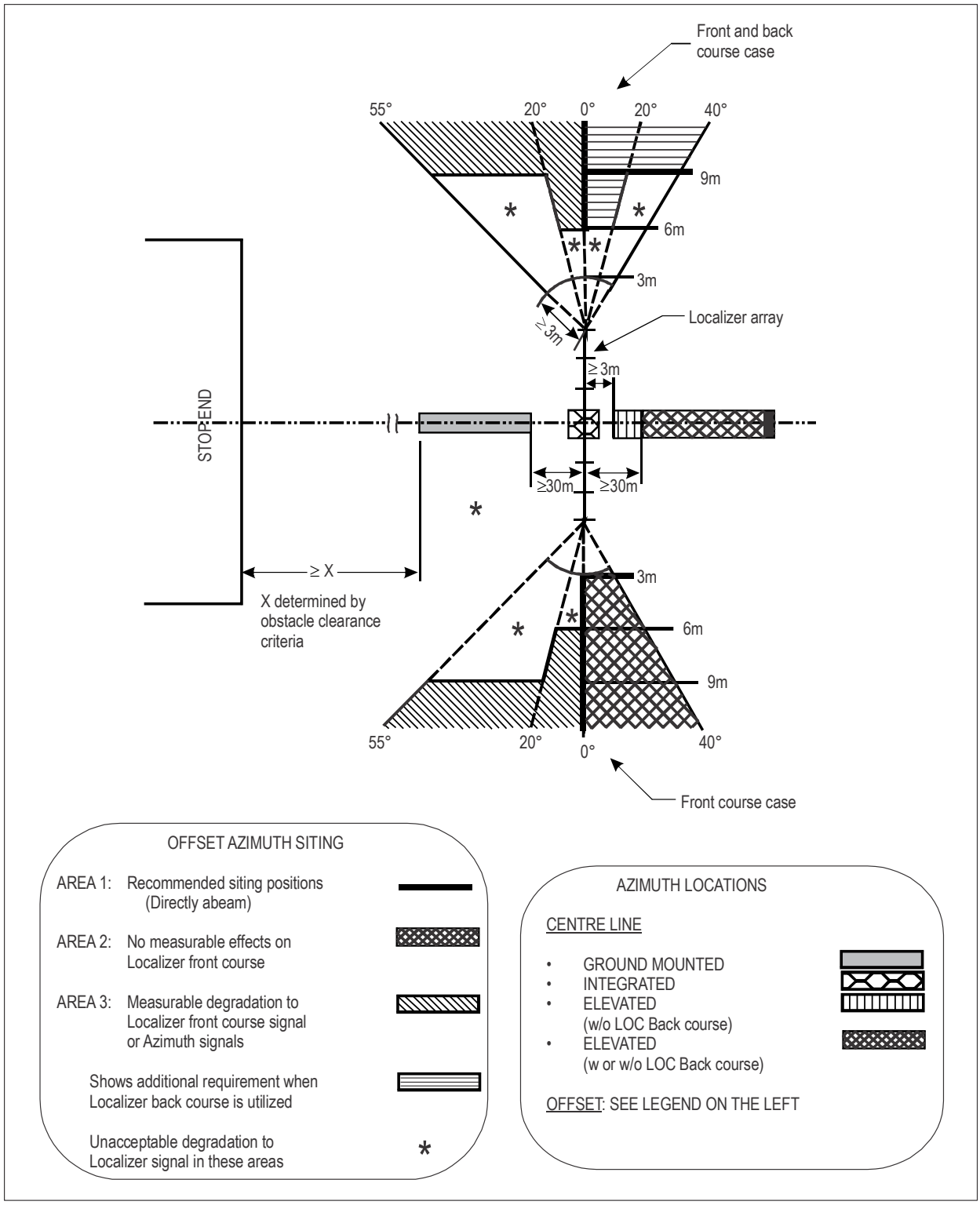

Figure G-21. Azimuth antenna regions for collocation with ILS

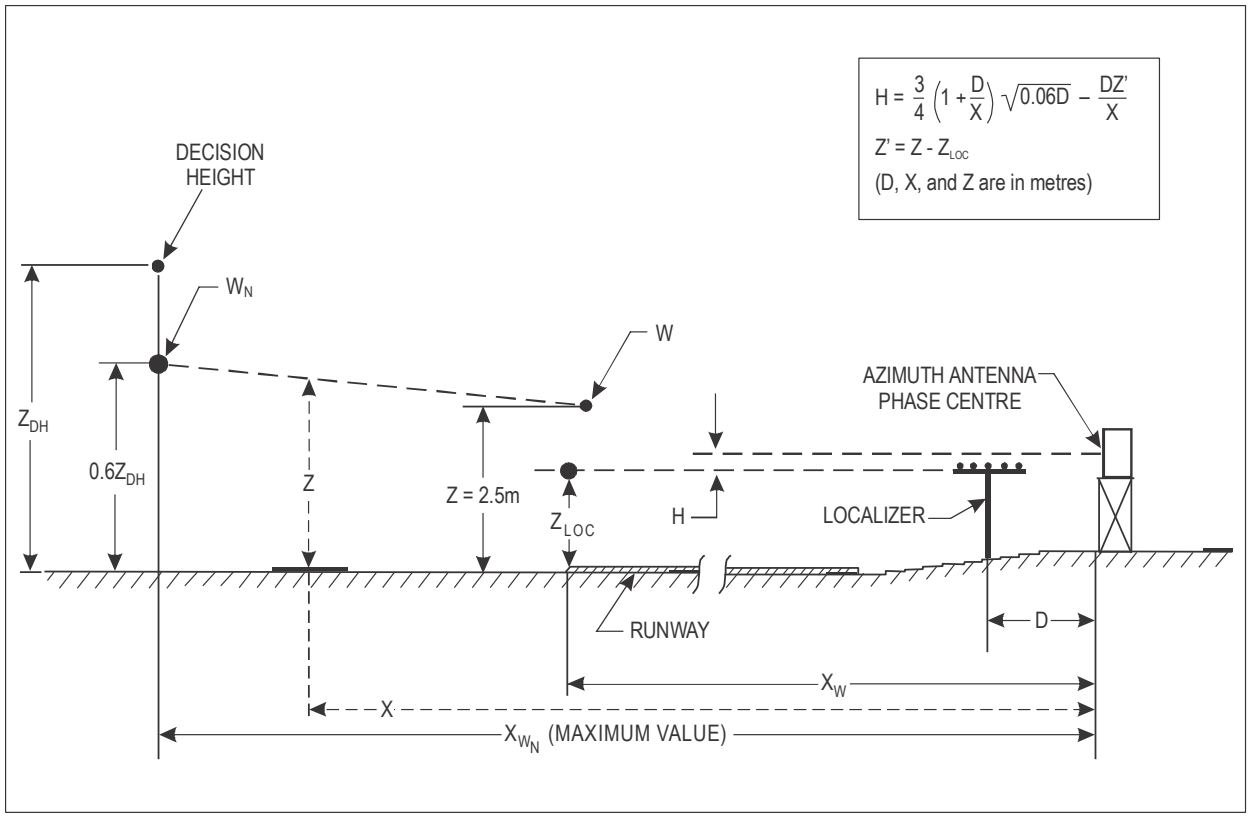

Figure G-22. Azimuth phase centre height requirement when siting an azimuth antenna behind an ILS localizer

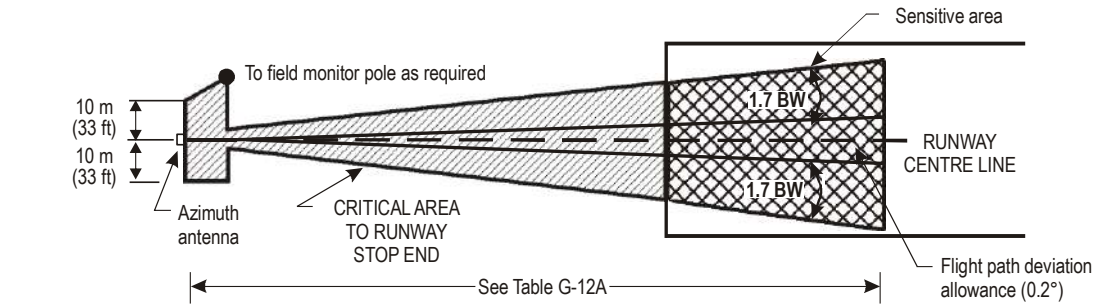

PLAN VIEW

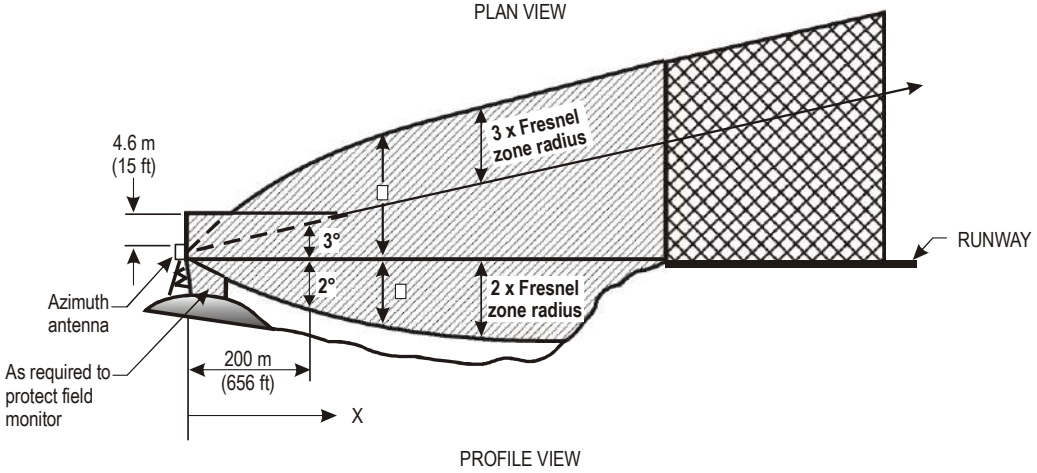

PROFILE VIEW

VALUE FOR α and β

* X m (ft)	** α m (ft)	** β m (ft)
30 (100)	1.1 (3.5)	5.7 (18.6)
75 (250)	2.7 (8.7)	10.5 (34.3)
150 (500)	5.3 (17.5)	17.1 (56.2)
225 (750)	7.5 (24.5)	23.2 (76.0)
300 (1 000)	8.6 (28.3)	28.9 (94.8)

Where:

$\alpha = 0.035\ X$ $\quad X < 200$ m

$\alpha = 2\sqrt{0.06\ X}$ $\quad X > 200$ m

$\beta = X \tan 3° + 3\sqrt{0.06\ X}$

* MEASURED HORIZONTALLY FROM AZIMUTH ANTENNA

** MEASURED VERTICALLY FROM BOTTOM OF AZIMUTH ANTENNA APERTURE

BW = BEAMWIDTH

Figure G-23A. Typical azimuth critical and sensitive areas

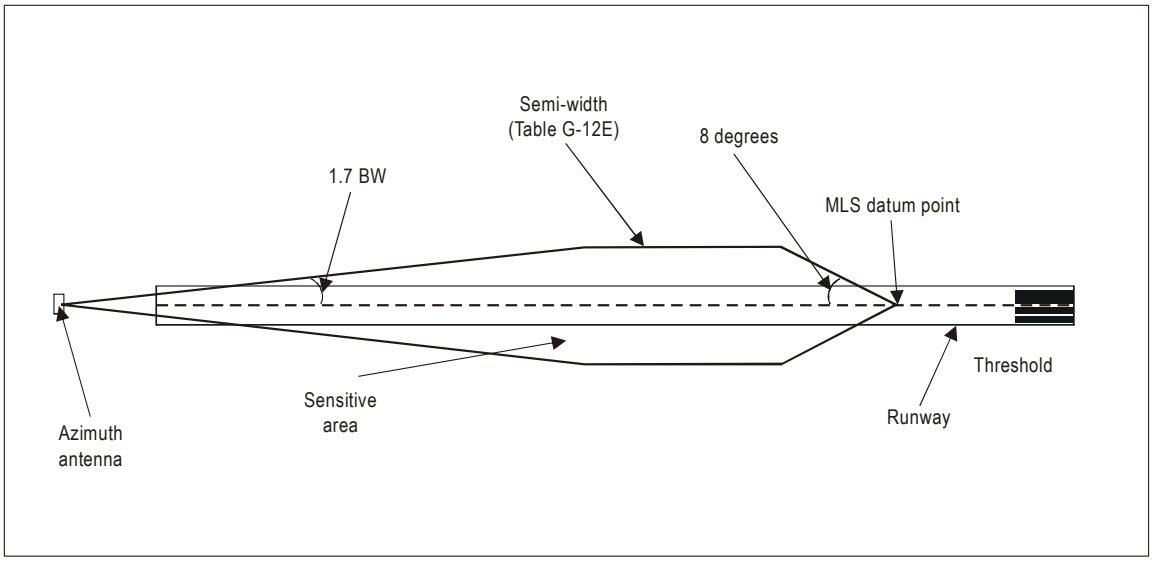

Figure G-23B. Typical azimuth sensitive area to protect roll-out guidance

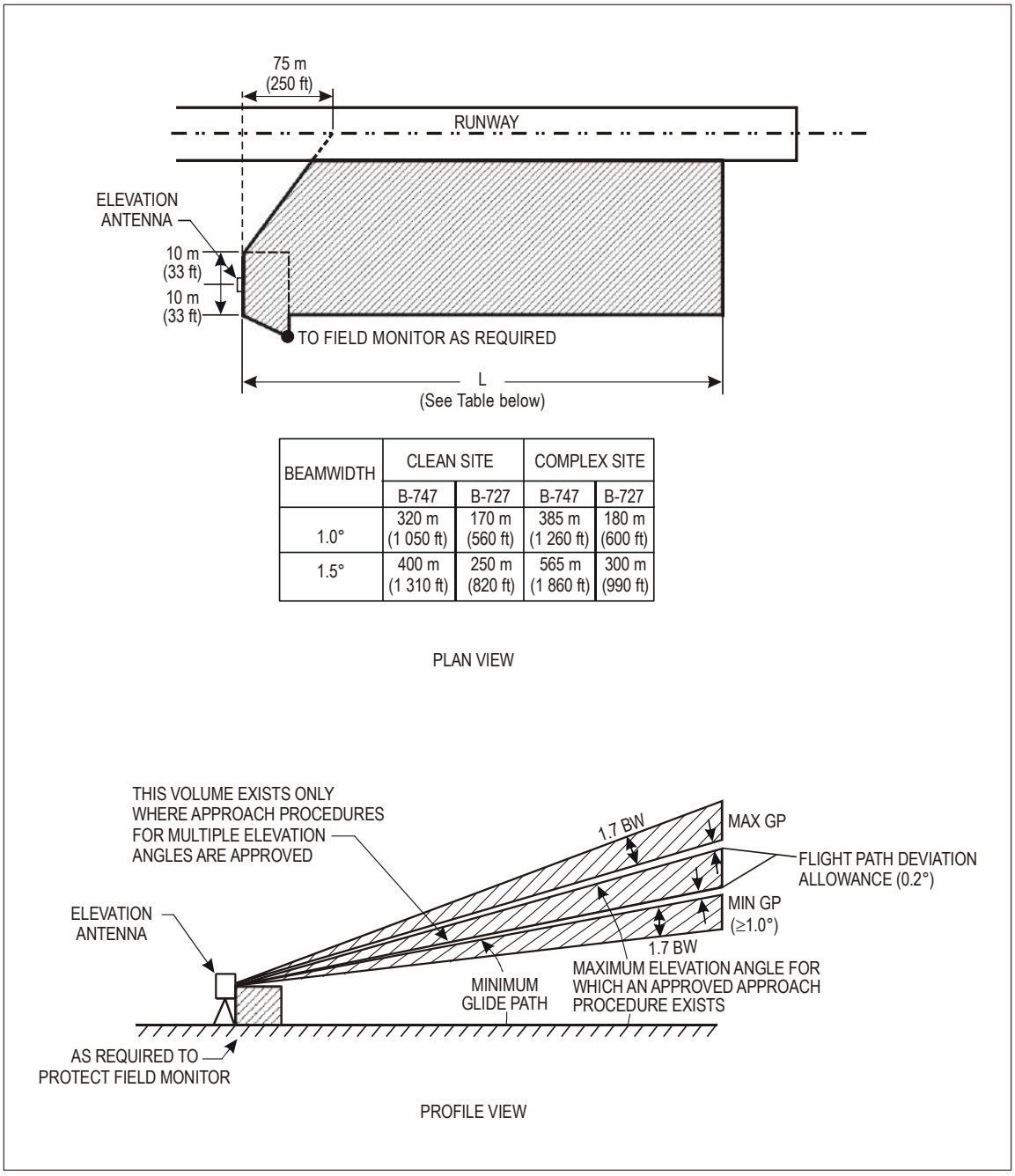

BEAMWIDTH	CLEAN SITE		COMPLEX SITE	
	B-747	B-727	B-747	B-727
1.0°	320 m (1 050 ft)	170 m (560 ft)	385 m (1 260 ft)	180 m (600 ft)
1.5°	400 m (1 310 ft)	250 m (820 ft)	565 m (1 860 ft)	300 m (990 ft)

PLAN VIEW

PROFILE VIEW

Figure G-24. Typical elevation critical and sensitive areas/volume

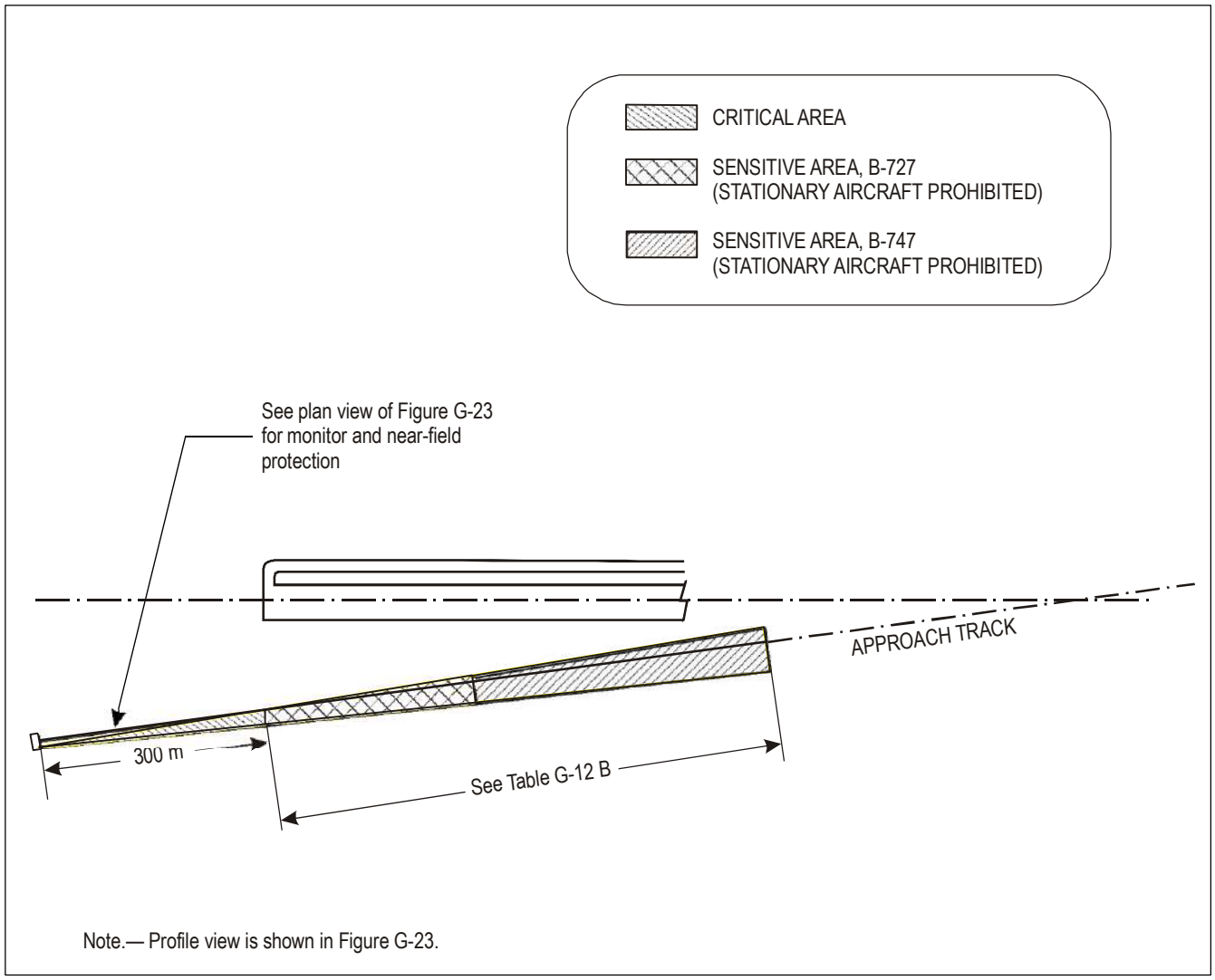

Figure G-25. Typical azimuth critical and sensitive areas for offset azimuth installation

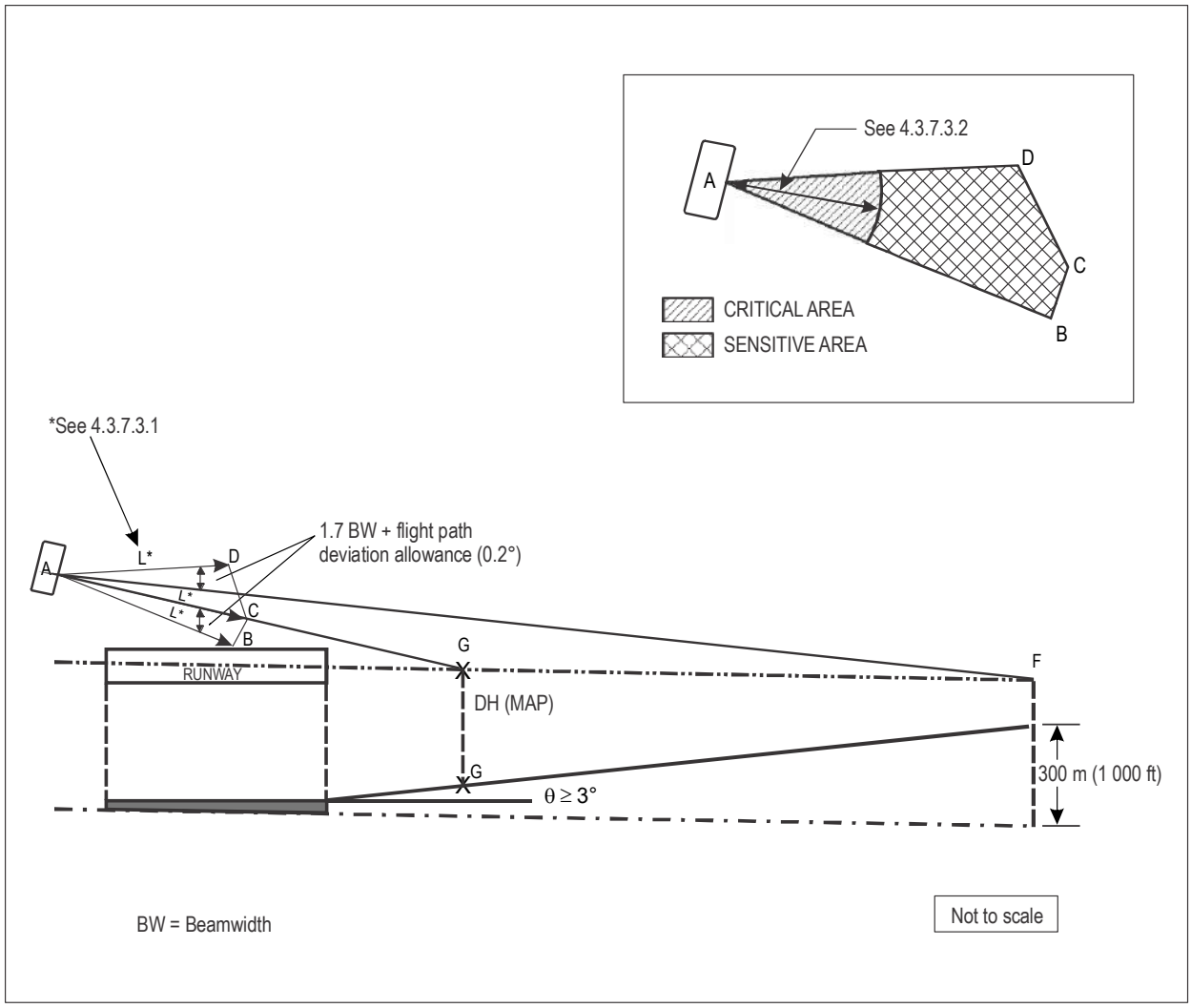

Figure G-26. Typical azimuth critical and sensitive areas/volume for the computed centre line procedure

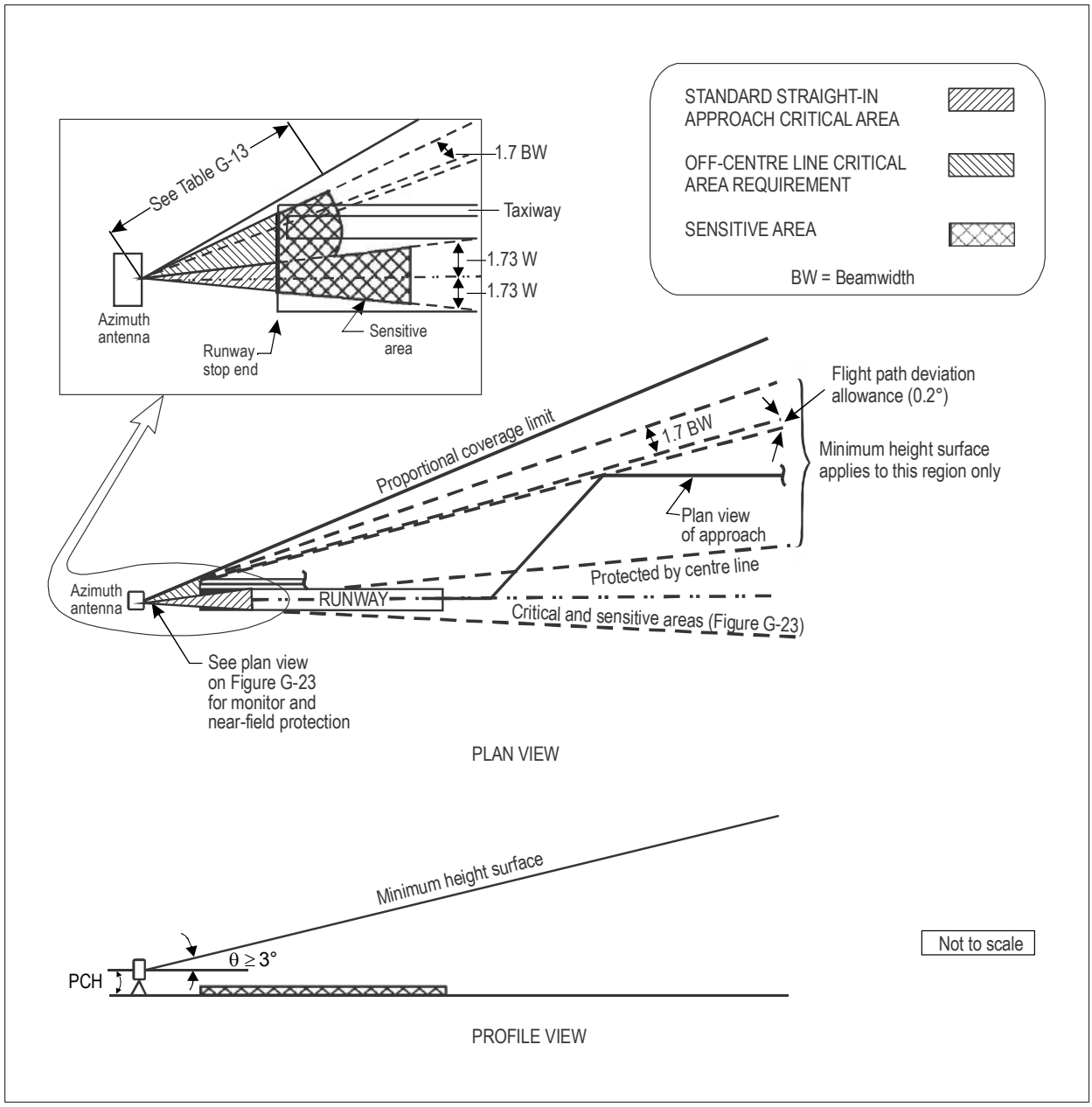

Figure G-27. Typical extension of azimuth critical and sensitive areas for segmented and curved approaches

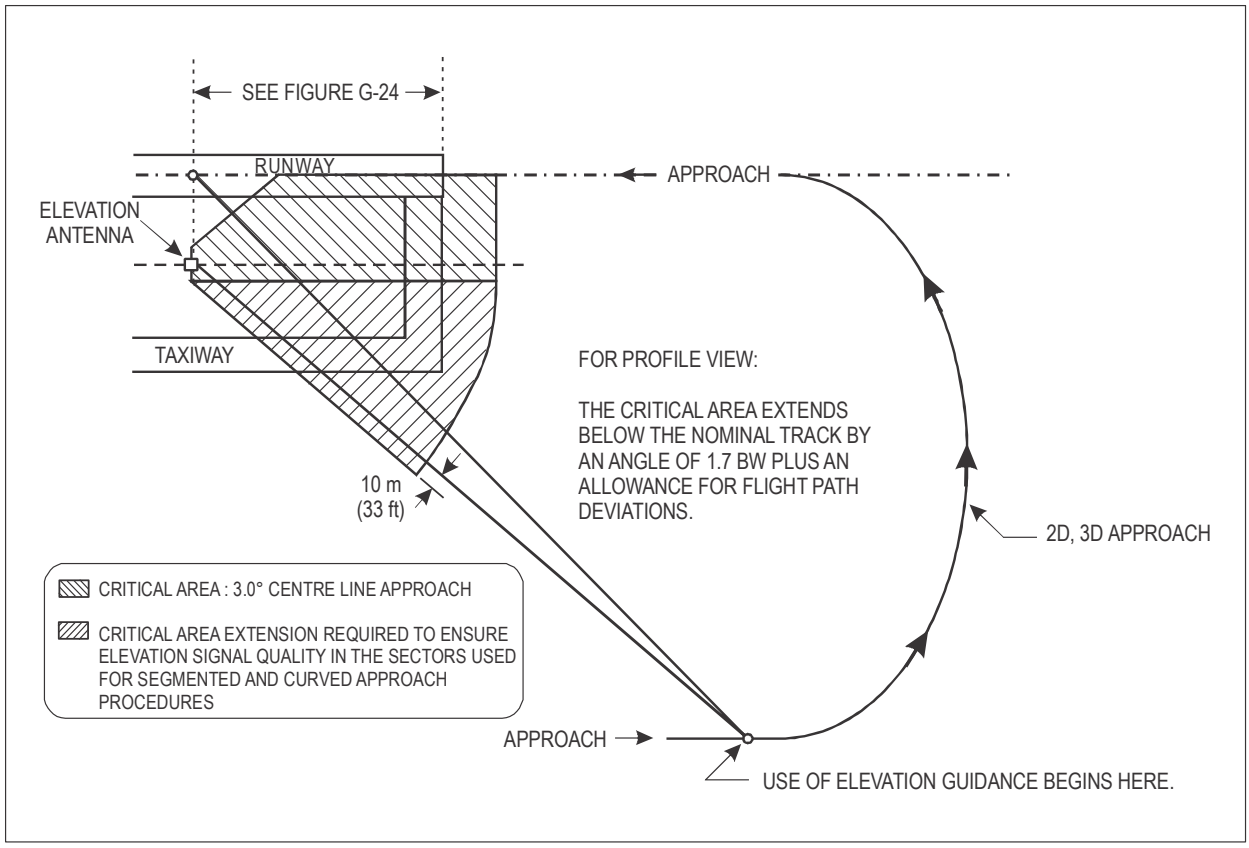

Figure G-28. Typical extension of the elevation critical area for segmented and curved approach procedures

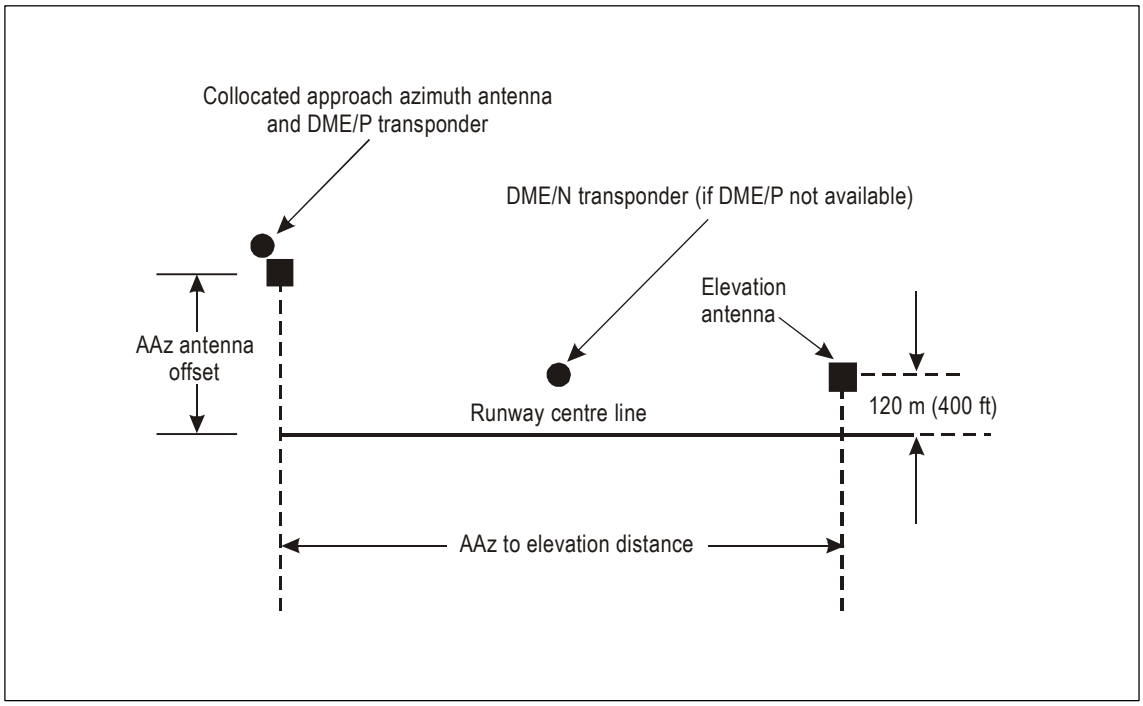

Figure G-29. Ground equipment geometry for computed centre line approaches

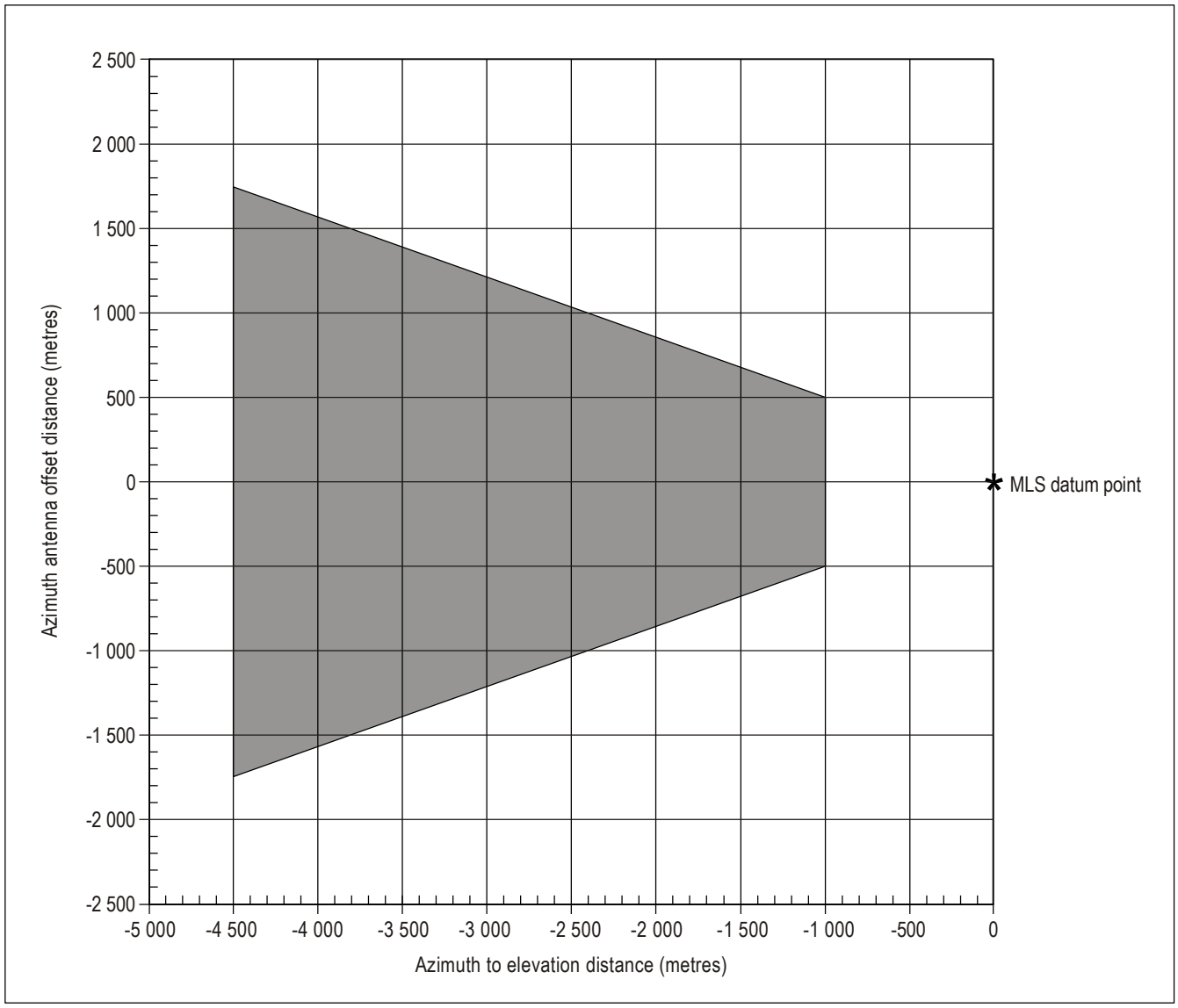

Figure G-30. Permissible azimuth antenna offsets for computed centre line approaches with DME/P (Standard 1) ranging

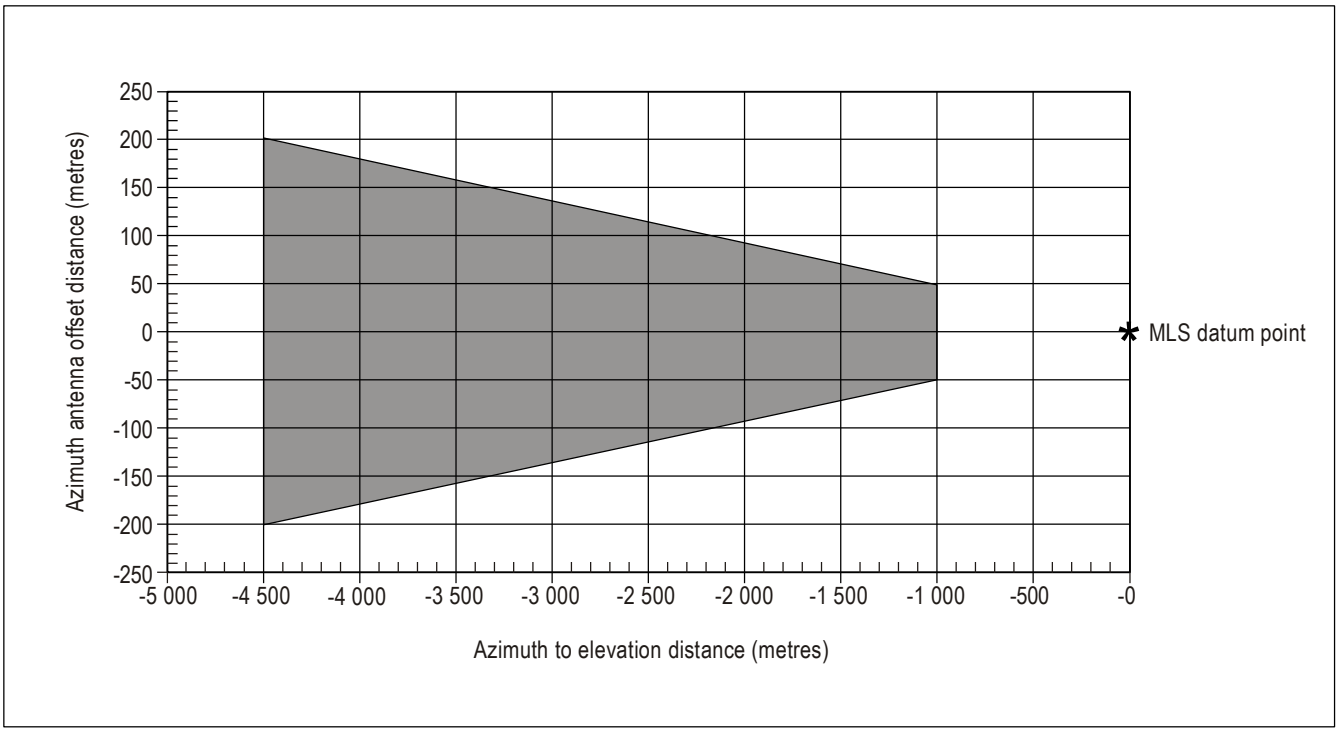

Figure G-31. Permissible azimuth antenna offsets for computed centre line approaches with DME/N ranging

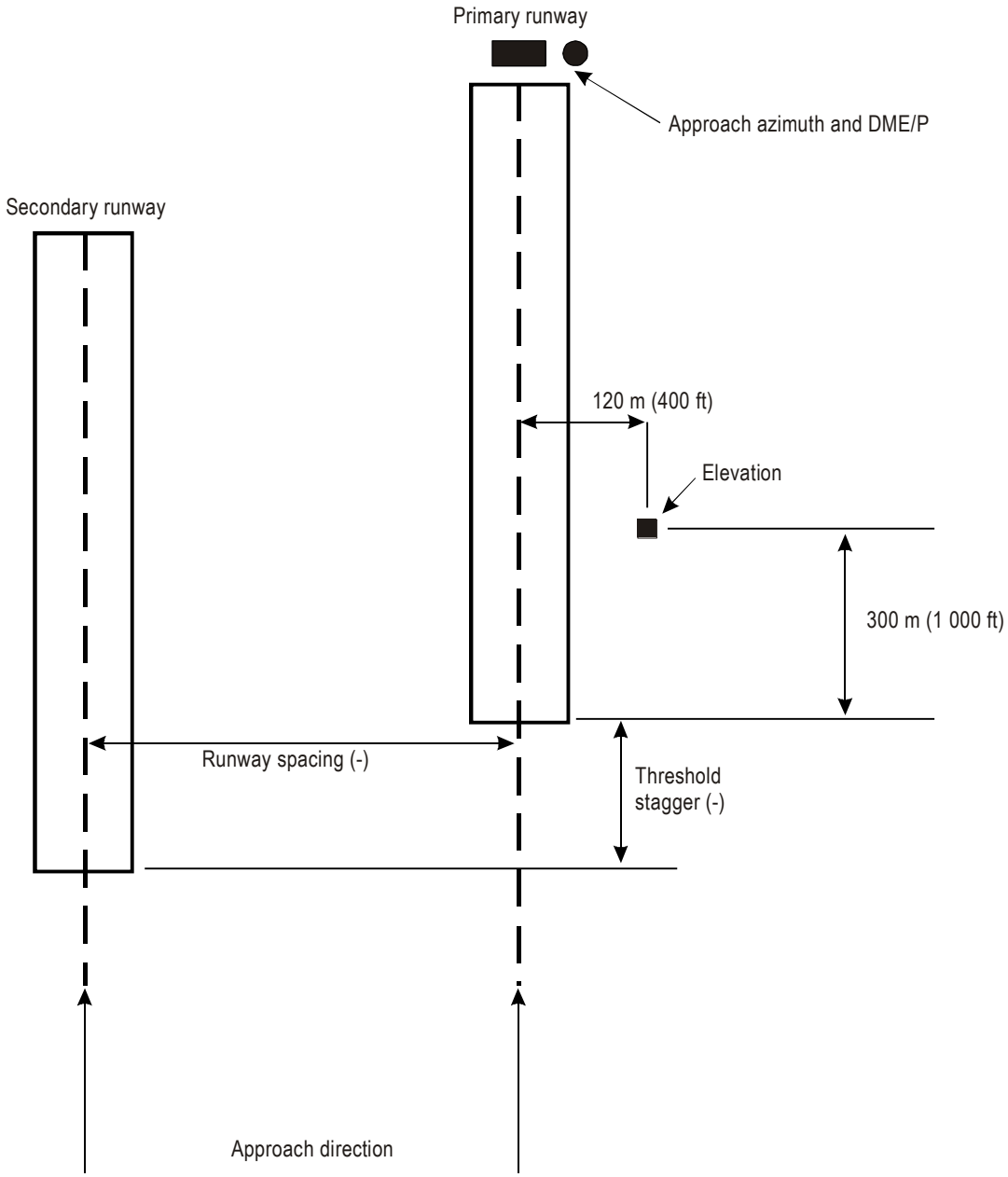

Note.— The position shown for the elevation antenna is defined by typical values that are used to compute the data shown in Figure G-33.

Figure G-32. Runway and equipment geometry for computed centre line approaches to parallel secondary runways

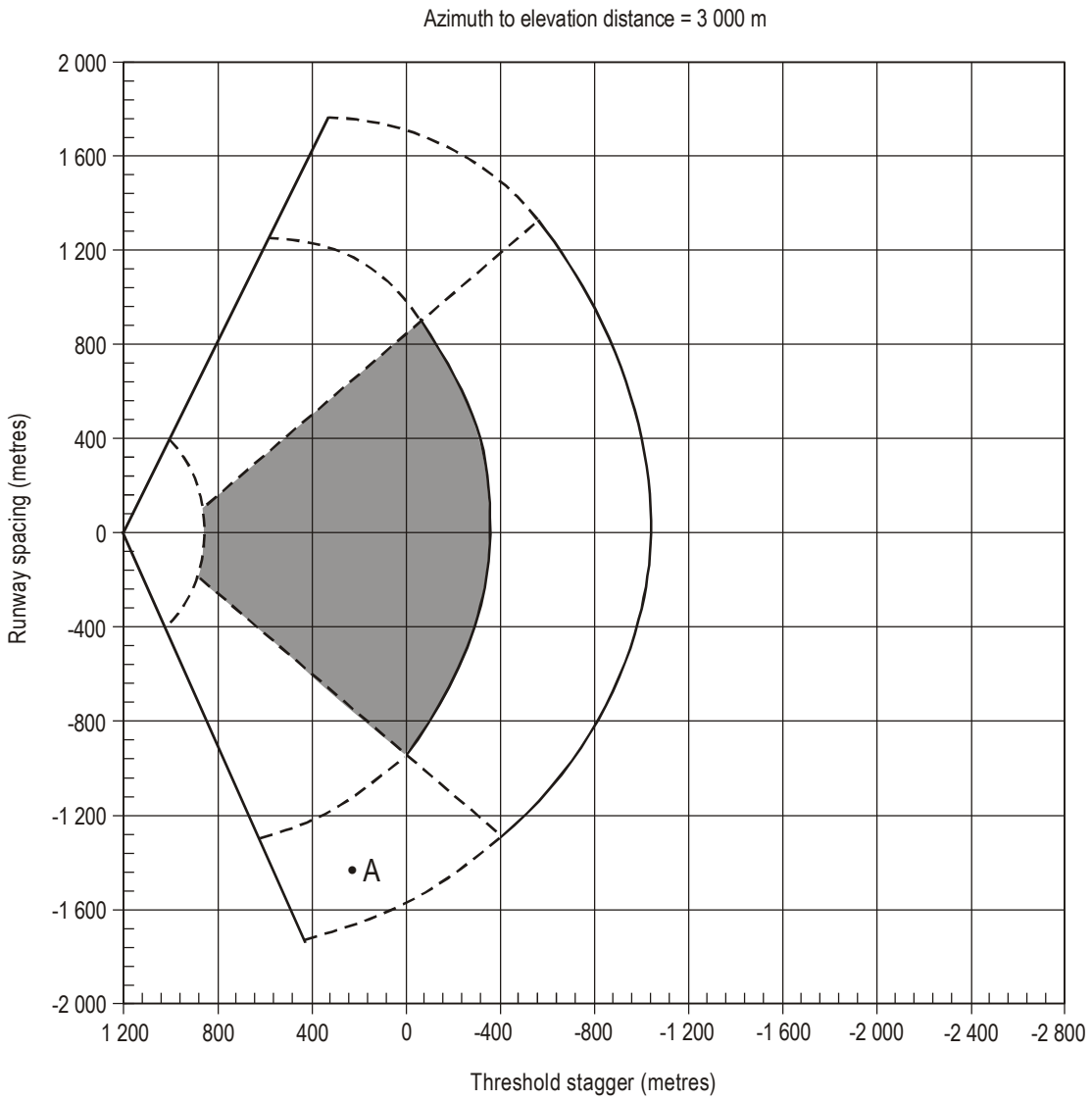

Notes:

1. The radial boundary is dependent on elevation antenna performance.
2. Point A represents the example described in 13.7.6.

Figure G-33. Permissible runway geometries for computed centre line approaches to parallel secondary runways

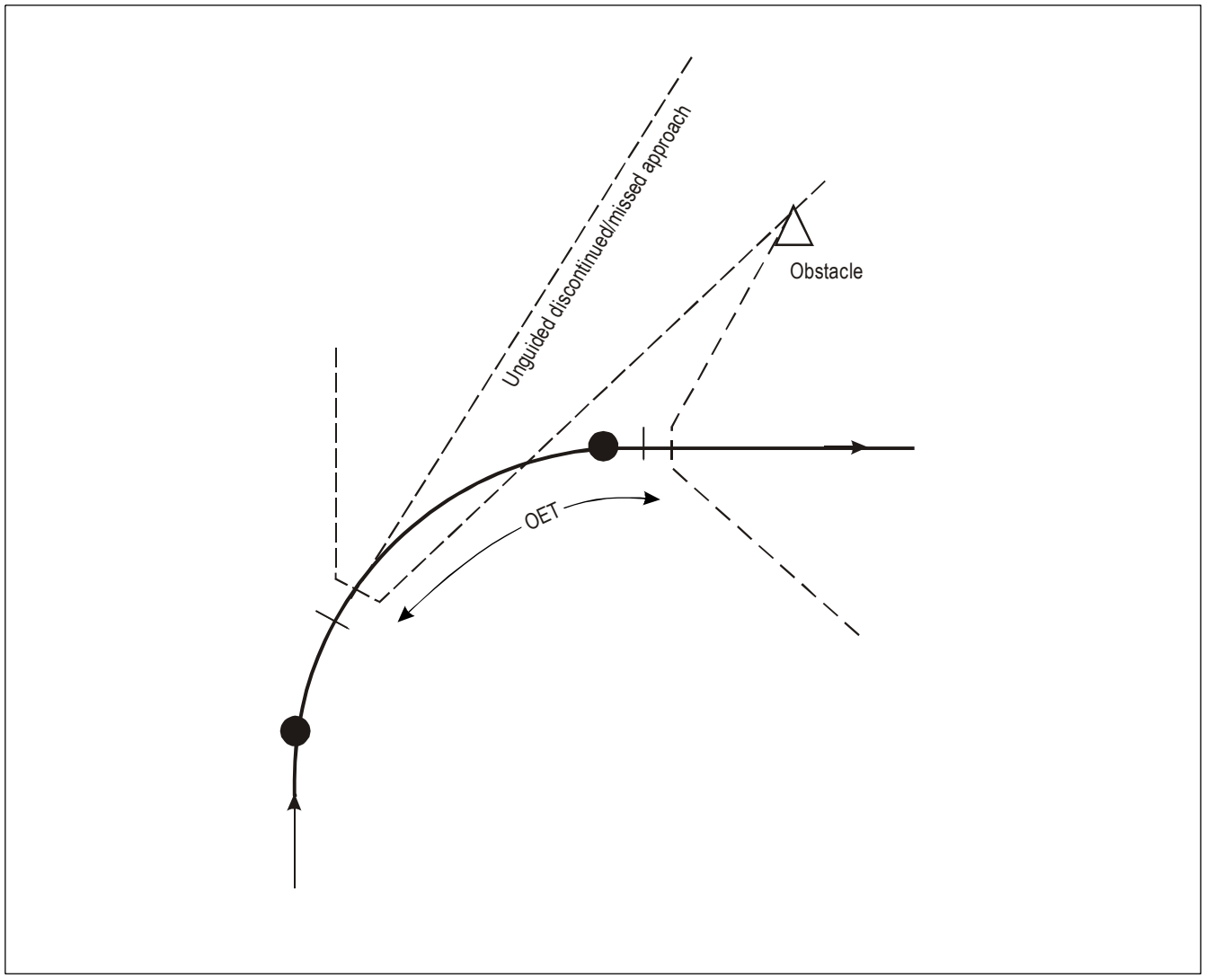

Figure G-34. Determination of obstacle exposure time (OET)

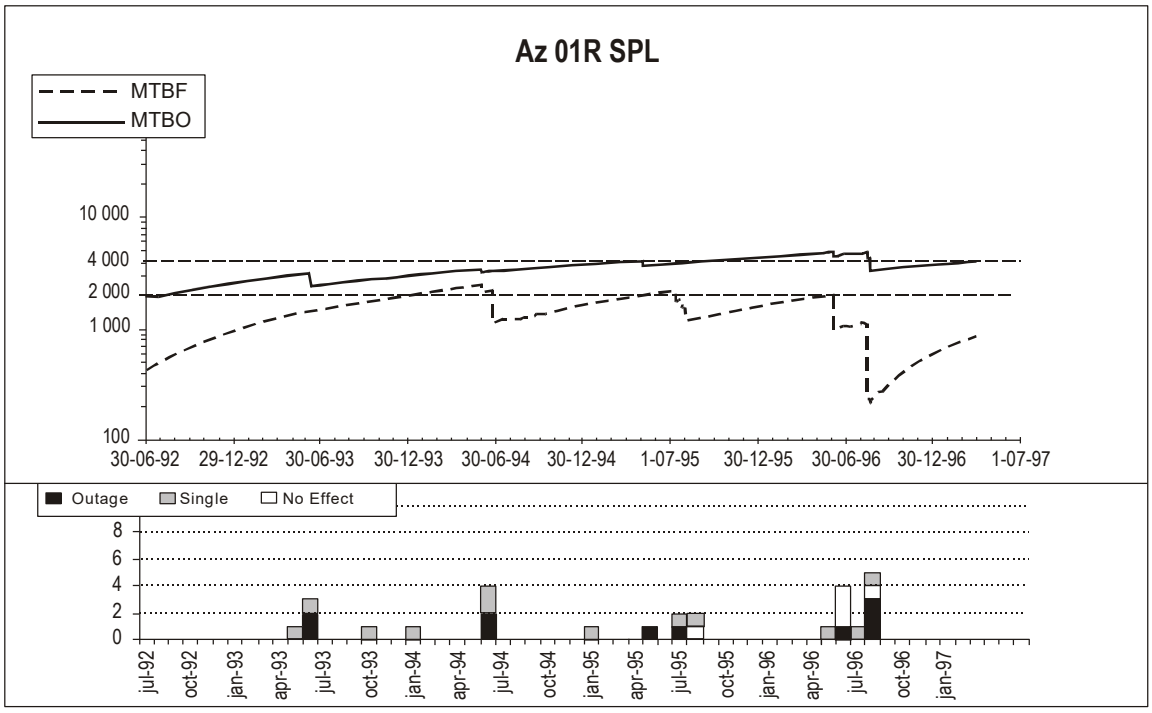

Figure G-35A. Example outage record for MLS azimuth facility

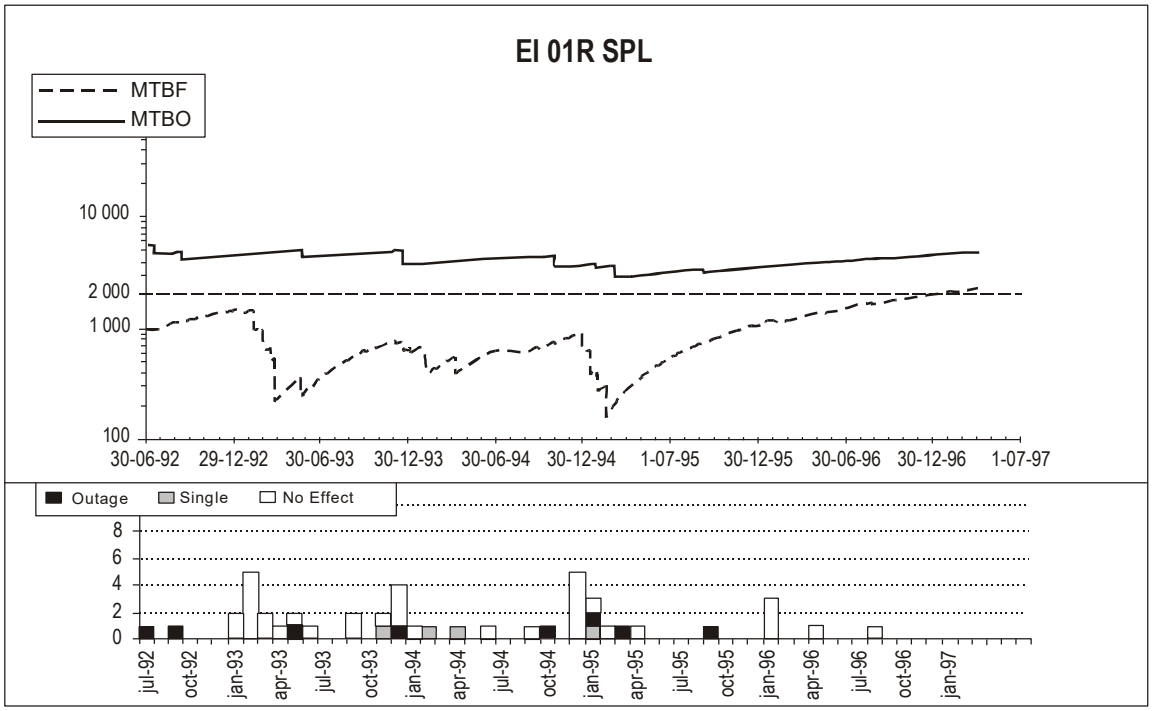

Figure G-35B. Example outage record for MLS elevation facility

ATTACHMENT H. STRATEGY FOR RATIONALIZATION OF CONVENTIONAL RADIO NAVIGATION AIDS AND EVOLUTION TOWARD SUPPORTING PERFORMANCE-BASED NAVIGATION

(see Chapter 2, 2.1)

1. INTRODUCTION

1.1 The shift from facility-referenced navigation to coordinate-based navigation enabled by performance-based navigation (PBN) provides significant benefits, in particular by supplying the flexibility required to design airspace and associated routes and procedures according to operational needs. The most suitable navigation infrastructure to support PBN is GNSS. Consequently, the role of conventional navigation aids is currently evolving towards that of a reversionary terrestrial infrastructure capable of maintaining safety and an adequate level of operations in case of unavailability of GNSS (for example due to outages). During this evolution, terrestrial aids may also enable PBN operations for users not yet equipped with GNSS.

1.2 The aim of the strategy set out in this attachment is to provide guidance to States to enable both a rationalization of navigation aids as well as a coordinated evolution towards the provision of a reversionary terrestrial infrastructure. This strategy should be considered in particular when deciding on investments into new facilities or on facility renewals. The context of this evolution of navigation infrastructure is described in the *Global Air Navigation Plan* (Doc 9750).

1.3 The strategy addresses the application of radio navigation aids to both conventional and performance-based navigation in en-route and terminal airspace, as well as their use as non-precision approach aids. Detailed guidance on PBN navigation infrastructure requirements is available in the *Performance-based Navigation (PBN) Manual* (Doc 9613).

Note.— The strategy relating to approach and landing with vertical guidance (APV) and precision approach and landing operations is contained in Attachment B.

2. OBJECTIVES OF THE STRATEGY

The strategy must:

a) maintain at least the current safety level of en-route and terminal area navigation operations;

b) facilitate the implementation of performance-based navigation (PBN);

c) maintain global interoperability;

d) provide regional flexibility based on coordinated regional planning;

e) encourage airspace users to equip with appropriate PBN avionics; and

f) take account of economic, operational and technical issues.

3. CONSIDERATIONS

3.1 Operational considerations

The following considerations are based on the assumption that the operational requirements are defined, that the required resources are committed, and that the required effort is applied. In particular, changes in radio navigation facility provision require associated efforts in airspace planning, procedure design, consideration of regulatory aspects and broad consultation with impacted airspace users.

3.2 NDB-related considerations

3.2.1 NDBs serve no role in PBN operations except as a means for position cross-checking and general situational awareness. These minor roles should not lead to the requirement to retain NDB facilities.

3.2.2 Except where no other alternative is available due to constraints in user fleet, financial, terrain or safety limitations:

a) the use of NDBs as en-route navigation aids or terminal area markers is generally obsolete;

b) NDBs used to support SID/STAR should be replaced by RNAV waypoints;

c) NDBs used as locators to assist in ILS intercept operations should be replaced by RNAV waypoints;

d) the use of NDB to support missed approach operations should be discouraged except where local safety cases require a non-GNSS missed approach capability; and

e) NDBs used as a non-precision approach aid should be withdrawn, taking the opportunity offered by the implementation of Assembly Resolution 37-11.

3.3 VOR related considerations

3.3.1 The only PBN navigation specification enabled by VOR, provided a co-located DME is present, is RNAV 5. Provision of RNAV 5 based on VOR/DME is subject to significant limitations, since integrated multi-sensor navigation makes very little use of VOR/DME, in some cases limiting the range of use to 25 NM. Also, only very few aircraft operators have a certified RNAV 5 capability which is based only on VOR/DME. Consequently, the use of VOR/DME to provide PBN services is discouraged. The only exception to this could be to support RNAV 5 routes at or near the bottom of en-route airspace (above minimum sector altitude, MSA) where achieving DME/DME coverage is challenging.

3.3.2 In principle, to enable cost savings, VOR facilities should be withdrawn in the context of an overall PBN plan. No new stand-alone VOR facilities (e.g. at new locations) should be implemented. However, VORs may be retained to serve the following residual operational purposes:

a) as a reversionary navigation capability (for example, for general aviation operations in order to assist in avoiding airspace infringements);

b) to provide navigation, cross-checking and situational awareness, especially for terminal area operations (pilot MSA awareness, avoiding premature automatic flight control system arming for ILS intercept, aircraft operational contingency procedures, such as engine failure on take-off, missed approaches, if required by local safety cases), in particular in areas where low altitude DME/DME coverage is limited;

c) for VOR/DME inertial updating where DME/DME updating is not available;

d) for non-precision approaches, as long as users are not equipped for RNP approaches and if no other suitable means of precision approach is available;

e) for conventional SID/STAR to serve non-PBN-capable aircraft;

f) as required to support the operations of State aircraft; and

g) to support procedural separation (as detailed in Doc 4444).

3.3.3 In order to provide DME-based RNAV capabilities, those locations which are retained for VOR should normally also be equipped with a co-located DME.

3.3.4 It is expected that adherence to the above principles should enable a decrease of the current number of facilities by 50 per cent or more in areas which support high densities of traffic. To achieve such results, States should develop a rationalization plan, taking into account the service age, all uses and operational roles of their facilities. This normally requires significant coordination with airspace users. The rationalization plan should be an integral part of the PBN implementation plan. Experience has shown that the associated project effort amounts to less expense than the replacement and refurbishment of a single VOR facility. The rationalization planning for VOR is also an important input into the evolution planning for DME.

3.4 DME-related considerations

3.4.1 DME/DME fully supports PBN operations based on the RNAV 1, RNAV 2 and RNAV 5 navigation specifications. Consequently, DME/DME (for equipped aircraft) is the most suitable current terrestrial PBN capability. DME/DME provides a fully redundant capability to GNSS for RNAV applications, and a suitable reversionary capability for RNP applications requiring an accuracy performance of ±1 NM (95 per cent) laterally, where supported by an adequate DME infrastructure.

Note.— While some aircraft are certified to provide RNP based on DME/DME, the ability of DME to provide RNP on a general basis is currently under investigation.

3.4.2 States are encouraged to plan the evolution of their DME infrastructure by considering the following:

a) Where a terrestrial navigation reversion capability is required, a DME network capable of supporting DME/DME navigation should be provided, where possible;

b) the DME network design should consider cost-savings opportunities whenever possible, such as the withdrawal from a site if an associated VOR is removed, or the possibility to efficiently set up new DME stand-alone sites where other ANSP CNS assets are located;

c) the DME network design should attempt to fill any gaps and provide coverage to as low altitudes as operationally useful without leading to excessive new facilities investments;

d) if satisfactory DME/DME coverage cannot be achieved, States may consider requiring INS equipage from airspace users to bridge gaps in coverage;

e) ANSPs should take maximum advantage of cross-border and military facilities (TACAN), provided the necessary agreements can be put in place; and

f) the frequency assignment of new DME stations should avoid the GNSS L5/E5 band (1 164 – 1 215 MHz) in areas of high DME station density, if possible.

3.4.3 If the above principles are adhered to, it is expected that the density of DME stations in a given area should become more uniform. In other words, the number of facilities in areas of high station density will be reduced, whereas it may need to be increased in areas of low station density.

3.4.4 It is recognized that in some areas, the provision of DME/DME navigation is not possible or practical, such as at very low altitudes, in terrain-constrained environments, or on small islands and areas over water. It should also be noted that some FMS exclude the use of ILS-associated DMEs. As a consequence, it is not possible to ensure consistent DME/DME service to all DME/DME-equipped users based on ILS-associated DMEs, and thus those facilities cannot be used to provide such service (regardless of whether they are published in the en-route section of the AIP).

3.5 Multi-sensor airborne navigation capability considerations

It is recognized that:

a) until all airspace users are both equipped and approved with suitable GNSS-based PBN capabilities, terrestrial navigation aids must be provided either to support conventional procedures or to support DME/DME-based PBN capabilities;

b) once all airspace users are both equipped and approved with suitable GNSS-based PBN capabilities, terrestrial navigation aids may need to be provided to mitigate the risks associated with GNSS outages;

c) it may not be practical or cost-efficient for some airspace users to equip with DME/DME-based and/or INS-based PBN capabilities; and

d) a review of flight plan filings can be an efficient tool to analyse user fleet equipage status; however, actual equipage and approval status may need to be confirmed by the aircraft operator.

3.6 Other considerations

3.6.1 The evolution of terrestrial navigation infrastructure must be accompanied by the development of corresponding operational reversion scenarios. Operational requirements must be balanced with regard to that which is possible at a reasonable cost, while ensuring safety. In particular, coverage requirements at low altitude can be associated with significant facility cost. Leveraging airspace user capabilities, such as INS, as well as other CNS capabilities (surveillance and communication service coverage and associated ATC capabilities) must be considered to the maximum extent practicable, including common mode failures. In some airspaces, it may not be possible to cater to all airspace user equipage levels and, as a consequence, some airspace users may become subject to operational restrictions.

3.6.2 Some States with a high traffic density environment have identified DME/DME as their main PBN reversion capability (providing either a fully redundant or a degraded level of performance). These States then also plan to provide a residual VOR or VOR/DME infrastructure network to cater to users which have a PBN capability exclusively enabled by GNSS or to those without an adequate PBN capability. Operational procedures associated with the use of such reversion capabilities are under development.

3.6.3 It must be noted that the use of the term “network” in this strategy refers only to navigation facilities assessed on a regional scale, and it does not refer to a network of routes or a particular airspace design. In high-density airspace, it is considered impractical to provide an alternate, conventional back-up route network, once the transition to a fully PBN-based route network has been achieved.

3.6.4 In a few limited cases, it may not be possible to provide the same level of benefits through the application of PBN as is possible when using conventional navigation capabilities, due to procedure design limitations or other aspects such as terrain-constrained environments. States are invited to bring these cases to the attention of ICAO.

4. STRATEGY

Based on the considerations above, the need to consult aircraft operators and international organizations, and to ensure safety, efficiency and cost-effectiveness of the proposed solutions, the global strategy is to:

a) rationalize NDB and VOR and associated procedures;

b) align rationalization planning with equipment life cycles and PBN implementation planning;

c) replace approaches without vertical guidance with vertically guided approaches;

d) where a terrestrial navigation reversion capability is required, evolve the existing DME infrastructure towards providing a PBN infrastructure complementary to GNSS;

e) provide a residual capability based on VOR (or VOR/DME, if possible) to cater to airspace users not equipped with suitable DME/DME avionics, where required; and

f) enable each region to develop an implementation strategy for these systems in line with the global strategy.

— END —

ISBN 978-92-9275-778-6